

VBR

VBR1/D0-3V

Vibration, shock and inclination sensor, 3-axis, RS485 + Analogue, M12 pigtail

VIBRATIONS AND INCLINATION SENSOR

OVERVIEW

- M18 housing
- AISI316L stainless steel housing (front included)
- IP67 protection degree

CE

TECHNICAL FEATURES

Detection properties	
Operative range	± 2g; ± 4g; ± 8g; ± 16g (selectable)
Resolution	15,62mg @ ± 2g 31,25mg @ ± 4g 62,50mg @ ± 8g 125mg @ ±16g
Detection Axes	3 (X, Y, Z)
Application	
Technology	MEMS
Outputs	

Output type	Digital + Analogue (I/V selectable)
Output Function	Vibration amplitude
Digital Output	RS485 57600 baud rate - 1 bit stop - no parity
Voltage Analogue Output	0…5V / 0…10V (selectable)
Current Analogue Output	4…20mA / 0…20mA / 0…24mA (selectable)

Electrical data

Operating Voltage	19,2 … 28,8 Vdc
Power consumption	< 1 W
LED indicators	Green: Run mode Yellow: writing/programming memory Blue: transit of RS485 packet data Red: Interrupt active
Reverse Polarity Protection	Yes
Impulsive Overvoltage Protection	Yes
Frequency Range	0 … 400Hz
Digital Resolution	16 bit @RS485 (complementary to 2)
Analogue Resolution	12 bit
Load Resistor (Voltage)	1kΩ … 1MΩ
Load Resistor (Current)	100 … 500Ω

Mechanical data

Dimensions	M18

Housing material	Stainless steel AISI316L (body) Grilamid (cable exit)
Connections	pigtail 200mm + M12- 5 poles
Active Head Material	Stainless steel AISI316L
Operating temperature	-25°C …+70°C
Storage temperature	-30°C … + 90°C (without ice)
Humidity	< 80% (without condensation)

Test/Approvals

Approvals	CE
Degree of protection	IP67

Accessories

Supplied Accessories	2 x nuts

Generical Data

Dimensions	M18
Operating Temperature	-25°C …+70°C
Humidity	< 80% (without condensation)
Mechanical Protection	IP67

CONNECTIONS

Eletrical diagram

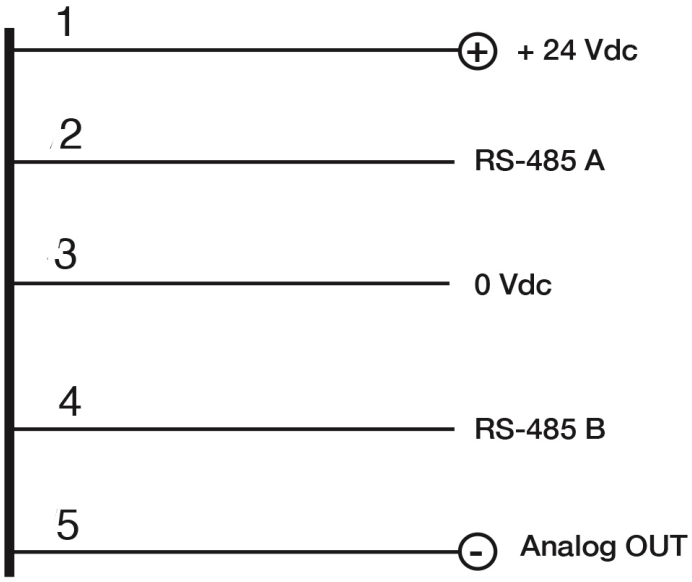

Connector

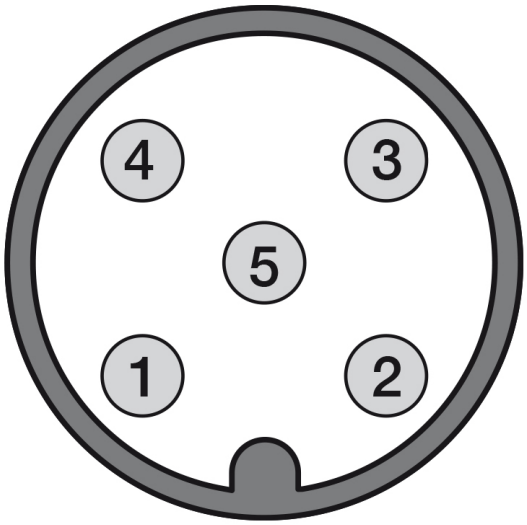

OTHERS

Dimensions

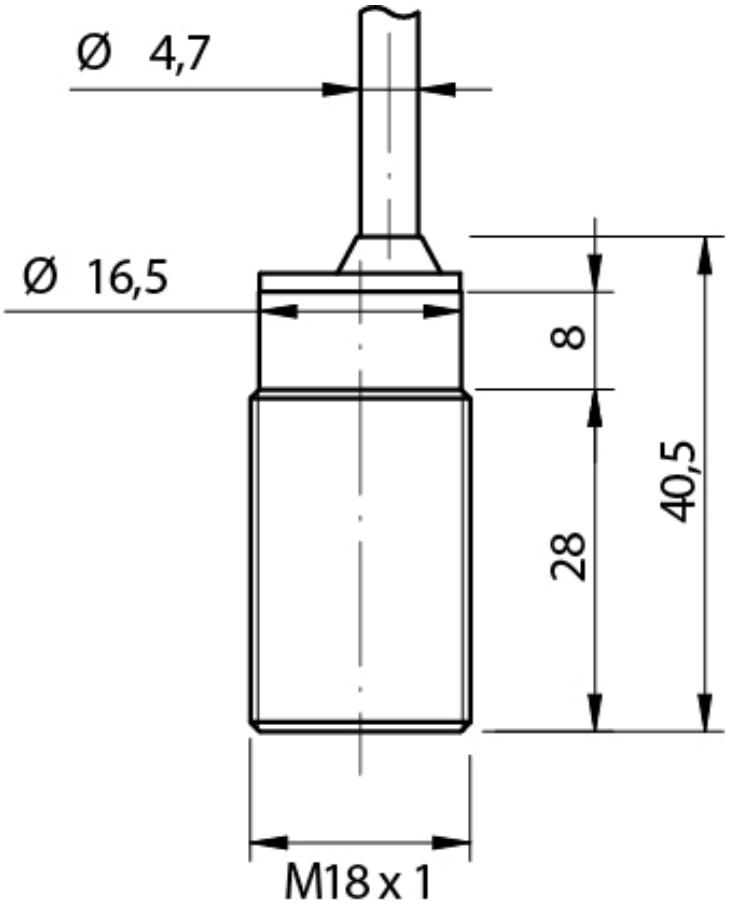

Datasensing S.r.l.
Strada S.Caterina, 235
41122 Modena (MO)
Tel. 059 420411
Fax 059 253973
E-mail
info@datasensing.com

date of printing
25/11/2026
06:14:15