

FC3

FC3/A

Photo.Fork,MOSFET-LO/DO,M12 plug,Edge detect

DUAL BEAMS PHOTOELECTRICS SLOT SENSOR FOR SENSOR EDGE DETECTION

OVERVIEW

- Dual beams photoelectric slot sensor
- RIAC output
- Light on/Dark on selectable by polarity inversion
- Approvals: CE

CE

TECHNICAL FEATURES

Detection properties

Beams space	6,8mm
Optics diameter	3mm

Outputs

Output type	MOSFET
Output Function	LO/DO
Switching frequency	25Hz

Electrical data

Operating Voltage	10...30Vdc
No-Load supply current	≤ 30mA
Load current	≤ 500mA (V=30Vdc/24Vac))
Leakage current	≤ 250µA (V=30V max))
Output voltage drop	≤ 1,2V @ Iload=500mA
Max ripple content	< 10%
LED indicators	green (supply) red (output)
Emission	infrared
Inrush current	5A (T=10µs)
Blocking voltage / Operating voltage	± 40/30Vdc - 30Vac eff.

Mechanical data

Dimensions	26,4 x 75 x 90 mm
Housing material	PCB
Weight	122g
Connections	Pigtail

Test/Approvals

Approvals	CE

Degree of protection	IP64

Generical Data

Dimensions	26,4 x 75 x 90 mm
Mechanical Protection	IP64

CONNECTIONS

Eletrical diagram

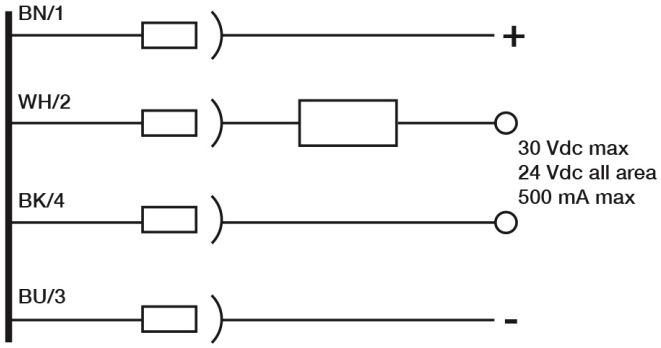

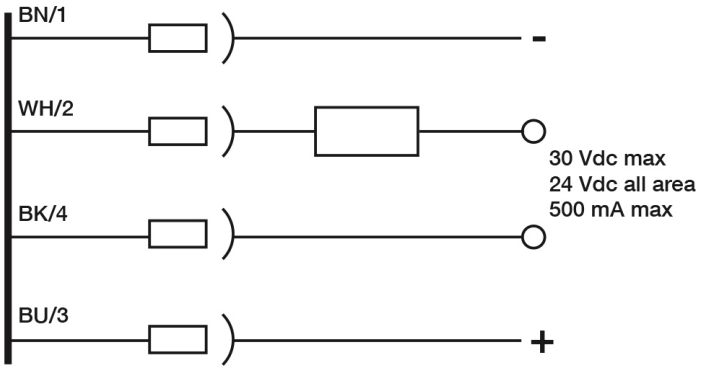

OTHERS

Dimensions

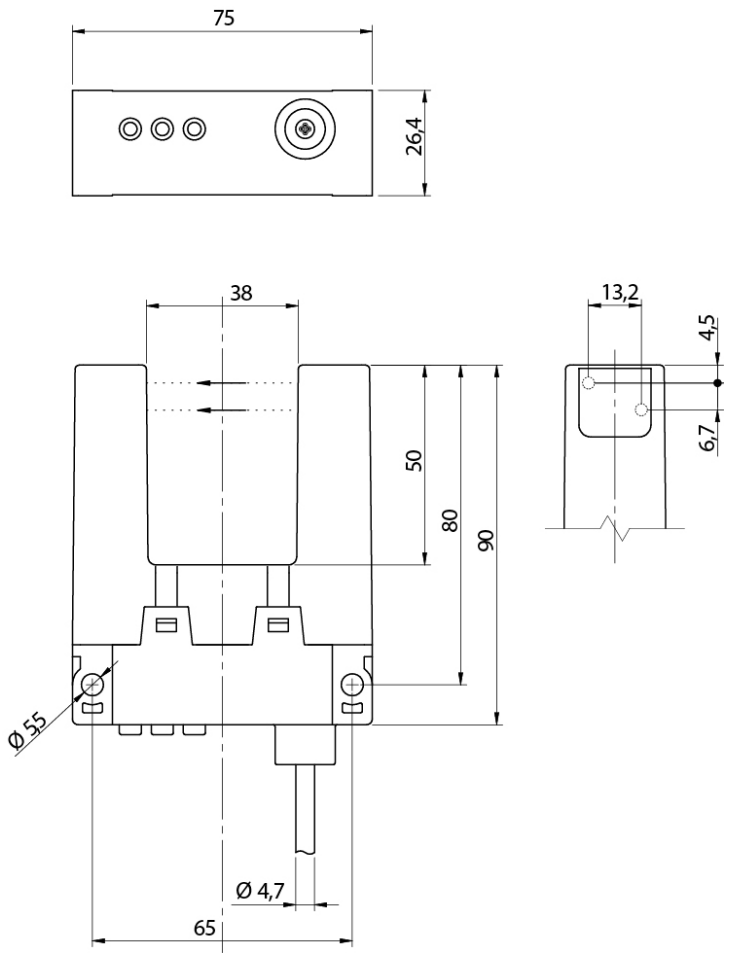

Datasensing S.r.l.
Strada S.Caterina, 235
41122 Modena (MO)
Tel. 059 420411
Fax 059 253973
E-mail
info@datasensing.com

date of printing
24/11/2026
05:58:10