

UT

UT2F/G7-0ESY

Ultra.M30,PNP+0-10V,M12 plug,Diffuse

M30 CYLINDRICAL DIRECT DIFFUSE & RETRO-REFLECTIVE ULTRASONIC SENSOR WITH TEACH-IN BUTTON

OVERVIEW

- M30 ultrasonic sensor with standard housing and with large front with high performances and high sensing distances
- Adjustable hysteresis function: models with double digital programmable output specific for level detection
- Models with voltage or current output: programmable slope to optimize resolution
- Adjustable working area (window mode or object mode) by Teach-in button on all models for a quick and easy installation
- Two multifunction LEDs: orange LED for adjustment procedure and output type and green LED for target alignment
- Plastic and AISI 316L stainless steel housing, plug M12 or cable exit 4 pin

TECHNICAL FEATURES

Detection properties	
Nominal sensing distance	
Thermal drift of Sr	
Repeat Accuracy	
Beam angle	
Resolution	

Sensitivity adjustment	Teach-in button
Hysteresis	
thermal compensation	
Minimum sensing distance (blind zone)	
Linearity error	

Application

Function Principle	Diffuse reflection

Outputs

Output type	PNP + 0...10V
Output Function	NO/NC + positive/negative slope
Switching frequency	
Response time	

Electrical data

Operating Voltage	
No-Load supply current	
Load current	
Leakage current	
Output voltage drop	

Max ripple content	
LED indicators	
Time delay before availability	
Short-circuit protection	
Reverse Polarity Protection	
Impulsive Overvoltage Protection	

Mechanical data

Dimensions	
Housing material	
Weight	
Connections	M12 Plug
Tightening torque	
Operating temperature	
Storage temperature	
Transducer Frequency	
Diameter/Dimension	M30

Test/Approvals

Approvals	

EMC compatibility
Shocks and vibrations
Degree of protection

Accessories

Supplied Accessories

Generical Data

Dimensions
Operating Temperature
Mechanical Protection

OTHERS

Dimensions

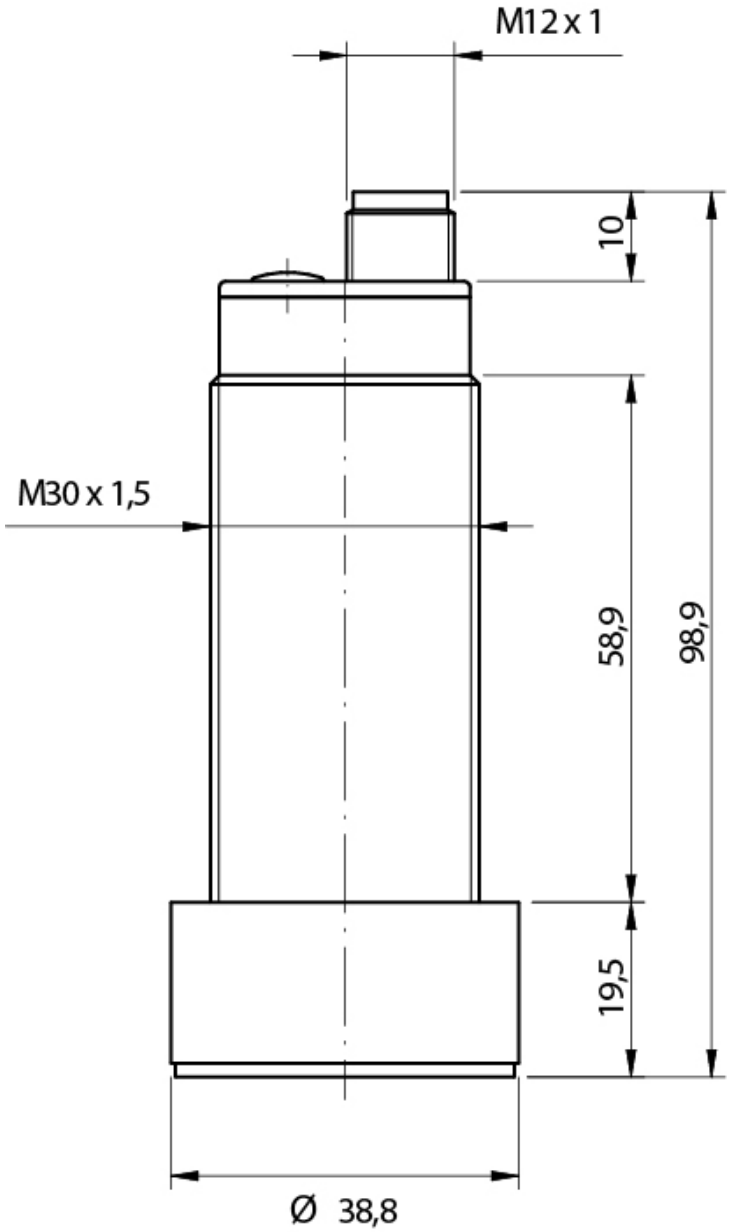
M12 x 1
10
M30 x 1,5
58,9
98,9
19,5
Ø 38,8

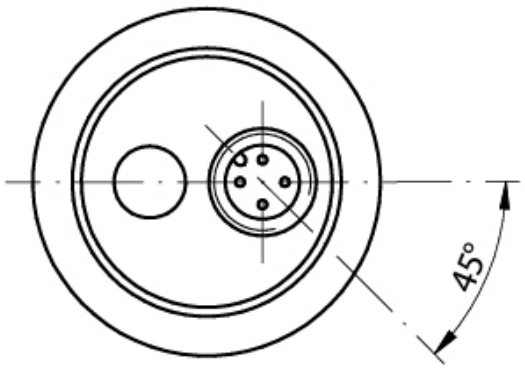
45°

S.r.l.
Strada S.Caterina, 235
41122 Modena (MO)
Tel. 059 420411
Fax 059 253973
E-mail
info@datasensing.com

printing
25/11/2026
05:40:09