

UT

UT1B/G7-0ESY

Ultra.M30,PNP+0-10V,M12 plug,Diffuse

M30 CYLINDRICAL DIRECT DIFFUSE & RETRO-REFLECTIVE ULTRASONIC SENSOR WITH TEACH-IN BUTTON

OVERVIEW

- M30 ultrasonic sensor with standard housing and with large front with high performances and high sensing distances
- Adjustable hysteresis function: models with double digital programmable output specific for level detection
- Models with voltage or current output: programmable slope to optimize resolution
- Adjustable working area (window mode or object mode) by Teach-in button on all models for a quick and easy installation
- Two multifunction LEDs: orange LED for adjustment procedure and output type and green LED for target alignment
- Plastic and AISI 316L stainless steel housing, plug M12 or cable exit 4 pin

TECHNICAL FEATURES

Detection properties	
Nominal sensing distance	
Thermal drift of Sr	
Repeat Accuracy	
Beam angle	
Resolution	

Sensitivity adjustment	Teach-in button
Hysteresis	
thermal compensation	
Minimum sensing distance (blind zone)	
Linearity error	

Application

Function Principle	Diffuse reflection

Outputs

Output type	PNP + 0...10V
Output Function	NO/NC + positive/negative slope
Switching frequency	
Response time	

Electrical data

Operating Voltage	
No-Load supply current	
Load current	
Leakage current	
Output voltage drop	

Max ripple content	
LED indicators	
Time delay before availability	
Short-circuit protection	
Reverse Polarity Protection	
Impulsive Overvoltage Protection	

Mechanical data

Dimensions	
Housing material	
Weight	
Connections	M12 Plug
Tightening torque	
Operating temperature	
Storage temperature	
Transducer Frequency	
Diameter/Dimension	M30

Test/Approvals

Approvals	

EMC compatibility
Shocks and vibrations
Degree of protection

Accessories

Supplied Accessories

Generical Data

Dimensions
Operating Temperature
Mechanical Protection

OTHERS

Dimensions

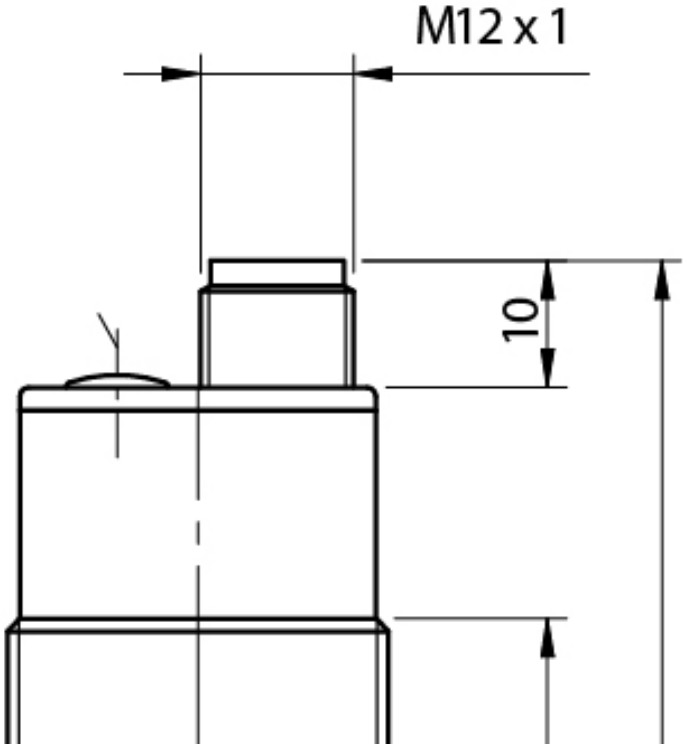

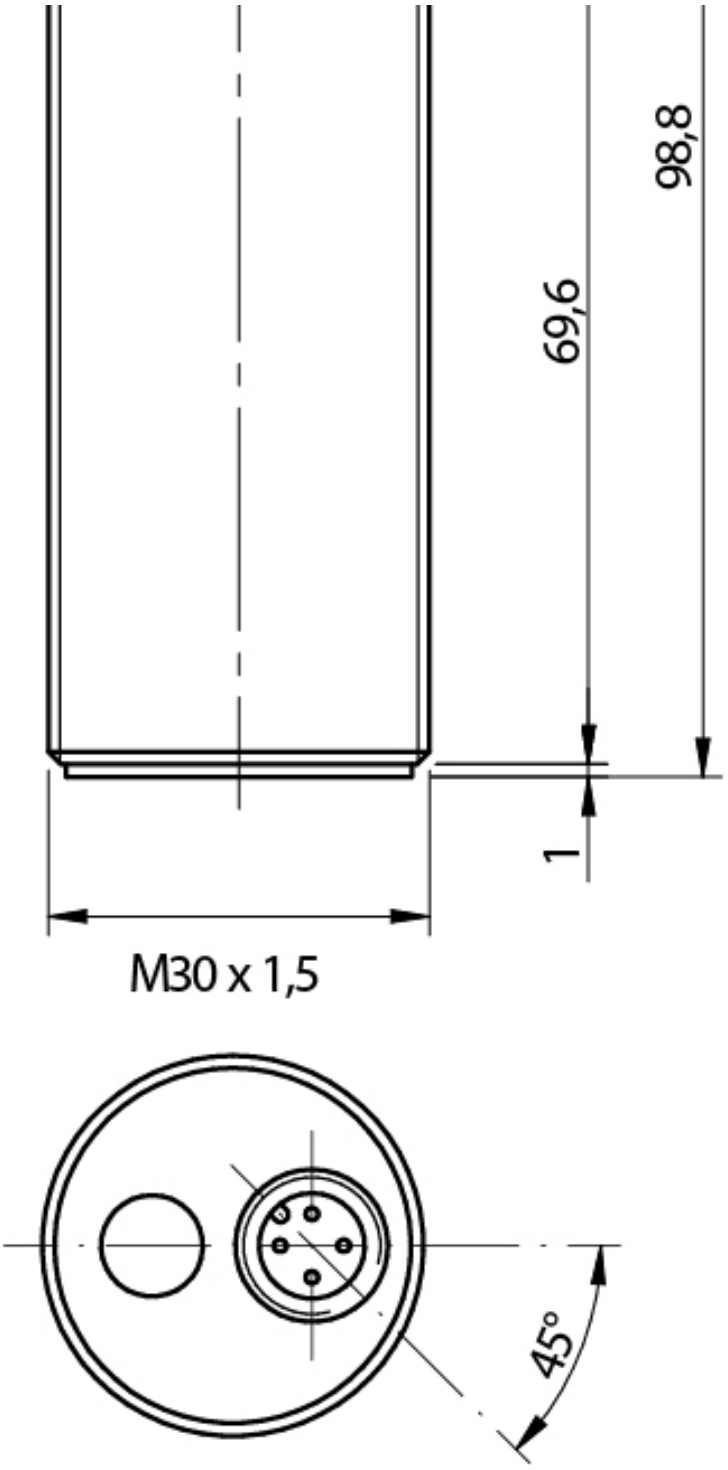

Datasensing S.r.l.
Strada S.Caterina, 235
41122 Modena (MO)
Tel. 059 420411
Fax 059 253973
E-mail
info@datasensing.com

date of printing
24/11/2026
05:52:00