

UK6

UK6C/H2-0EUL

Ultra.M18,4-20mA,M12 plug,Diffuse

M18 CYLINDRICAL SHORT BODY DIRECT DIFFUSE & RETRO-REFLECTIVE ULTRASONIC SENSOR UK6 WITH TEACH-IN BUTTON

OVERVIEW

- M18 diffuse sensors with short housing
- Digital output
- Analogue output

TECHNICAL FEATURES

Detection properties

Nominal sensing distance	800mm
Thermal drift of Sr	≤2%
Repeat Accuracy	0,50%
Beam angle	8° ± 2°
Resolution	≤3mm
Sensitivity adjustment	Teach-in button

Hysteresis	1%
thermal compensation	Yes
Minimum sensing distance (blind zone)	60mm
Linearity error	1%

Application

Function Principle	Diffuse reflection

Outputs

Output type	4...20mA
Output Function	
Switching frequency	5Hz
Response time	500ms

Electrical data

Operating Voltage	10 - 30Vdc
No-Load supply current	≤35mA @Val = 30V
Load current	100mA
Leakage current	10μA @ 30Vcc
Output voltage drop	2,2Vmax. @ IL=100 mA
Max ripple content	5%

LED indicators	green: echo - yellow: output
Time delay before availability	≤300ms
Short-circuit protection	Yes
Reverse Polarity Protection	Yes
Impulsive Overvoltage Protection	Yes

Mechanical data

Dimensions	M18 x 1 / L = 60,3mm
Housing material	PBT housing
Weight	65g
Connections	M12 Plug
Tightening torque	1Nm
Operating temperature	- 20°C…+ 70°C
Storage temperature	- 35°C…+ 80° C without freeze
Transducer Frequency	230kHz
Diameter/Dimension	M18

Test/Approvals

Approvals	CE cULus
EMC compatibility	IEC 60947-5-2

Shocks and vibrations	IEC EN60947-5-2 / 7.4
Degree of protection	IP67

Accessories

Supplied Accessories	2 nuts M18x1, 2 washers Ø 18

Generical Data

Dimensions	M18 x 1 / L = 60,3mm
Operating Temperature	- 20°C…+ 70°C
Mechanical Protection	IP67

CONNECTIONS

Eletrical diagram

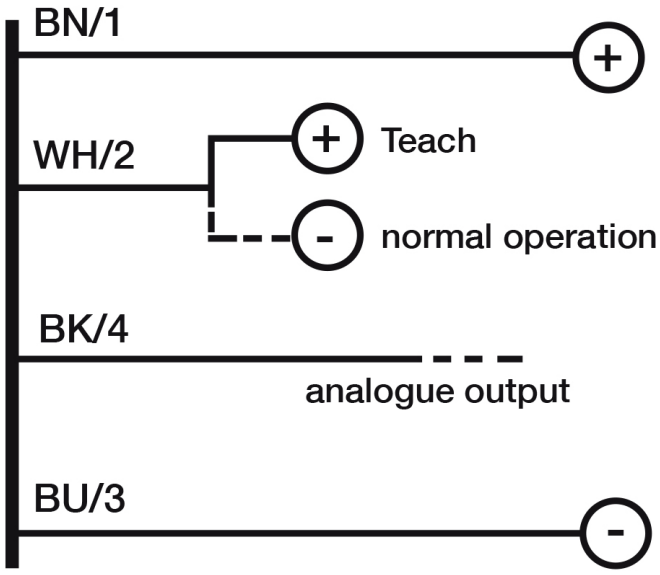

Connector

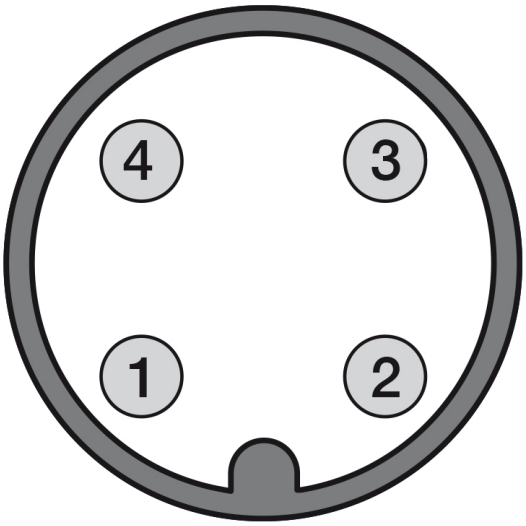

OTHERS

Dimensions

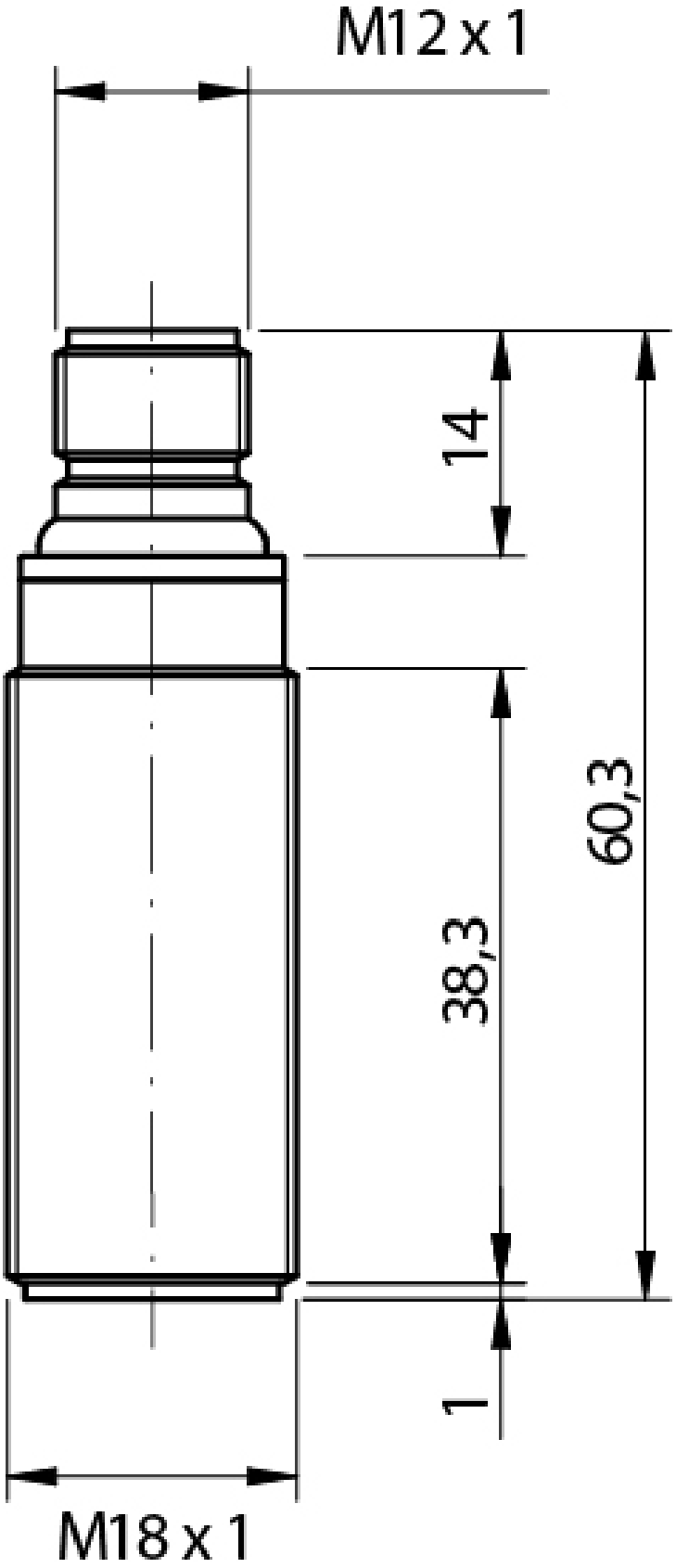

Response curves

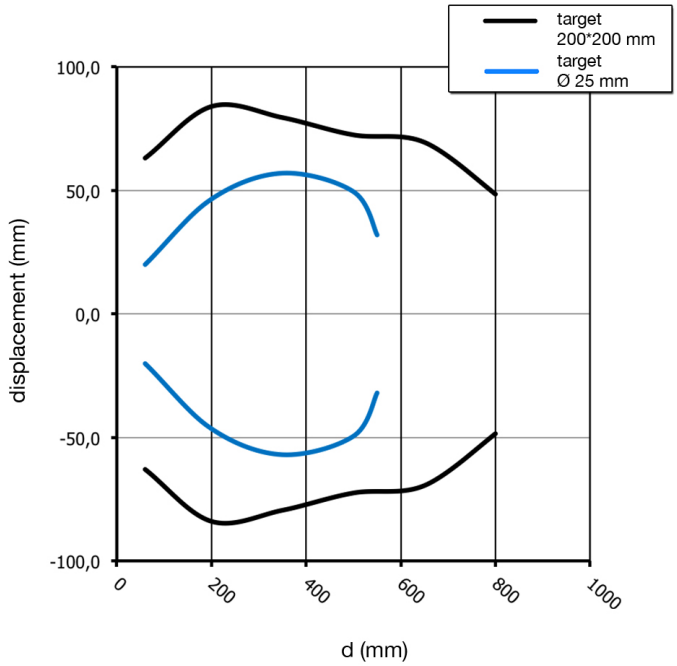

Datasensing S.r.l.
Strada S.Caterina, 235
41122 Modena (MO)
Tel. 059 420411
Fax 059 253973
E-mail
info@datasensing.com

date of printing
24/11/2026
06:33:47