

# UK6

## UK6C/H1-0EUL

### Ultra.M18,0-10V,M12 plug,Diffuse

**M18 CYLINDRICAL SHORT BODY DIRECT DIFFUSE & RETRO-REFLECTIVE ULTRASONIC SENSOR UK6 WITH TEACH-IN BUTTON**

# OVERVIEW

- M18 diffuse sensors with short housing
- Digital output
- Analogue output

# TECHNICAL FEATURES

Detection properties

| | |
|---|---|
| Nominal sensing distance | 800mm |
| Thermal drift of Sr | ≤2% |
| Repeat Accuracy | 0,50% |
| Beam angle | 8° ± 2° |
| Resolution | ≤3mm |
| Sensitivity adjustment | Teach-in button |

| | |
|---|---|
| Hysteresis | 1% |
| thermal compensation | Yes |
| Minimum sensing distance (blind zone) | 60mm |
| Linearity error | 1% |

Application

| | |
|---|---|
| Function Principle | Diffuse reflection |

Outputs

| | |
|---|---|
| Output type | 0...10V |
| Output Function | |
| Switching frequency | 5Hz |
| Response time | 500ms |

Electrical data

| | |
|---|---|
| Operating Voltage | 10 - 30Vdc |
| No-Load supply current | ≤35mA @Val = 30V |
| Load current | 100mA |
| Leakage current | 10μA @ 30Vcc |
| Output voltage drop | 2,2Vmax. @ IL=100 mA |
| Max ripple content | 5% |

| | |
|---|---|
| LED indicators | green: echo - yellow: output |
| Time delay before availability | ≤300ms |
| Short-circuit protection | Yes |
| Reverse Polarity Protection | Yes |
| Impulsive Overvoltage Protection | Yes |
| Minimum load resistence | 3kΩ |

Mechanical data

| | |
|---|---|
| Dimensions | M18 x 1 / L = 60,3mm |
| Housing material | PBT housing |
| Weight | 65g |
| Connections | M12 Plug |
| Tightening torque | 1Nm |
| Operating temperature | - 20°C…+ 70°C |
| Storage temperature | - 35°C…+ 80° C without freeze |
| Transducer Frequency | 230kHz |
| Diameter/Dimension | M18 |

Test/Approvals

| | |
|---|---|
| Approvals | CE cULus |

| | |
|---|---|
| EMC compatibility | IEC 60947-5-2 |
| Shocks and vibrations | IEC EN60947-5-2 / 7.4 |
| Degree of protection | IP67 |

Accessories

| | |
|---|---|
| Supplied Accessories | 2 nuts M18x1, 2 washers Ø 18 |

Generical Data

| | |
|---|---|
| Dimensions | M18 x 1 / L = 60,3mm |
| Operating Temperature | - 20°C…+ 70°C |
| Mechanical Protection | IP67 |

# CONNECTIONS

Eletrical diagram

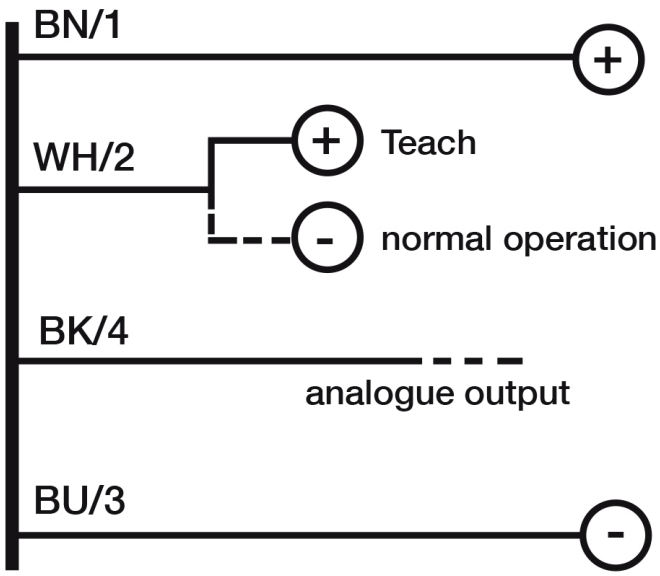

Connector

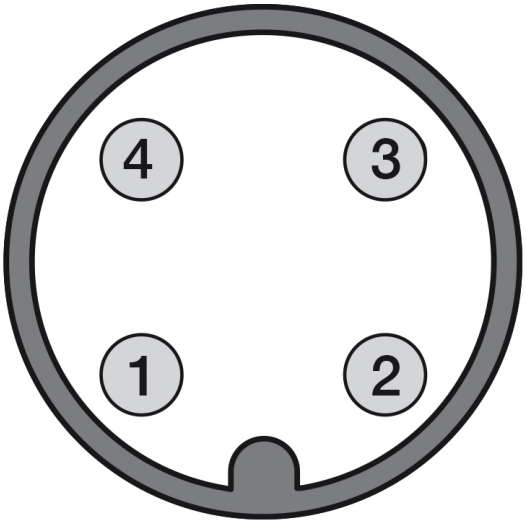


# OTHERS

Dimensions

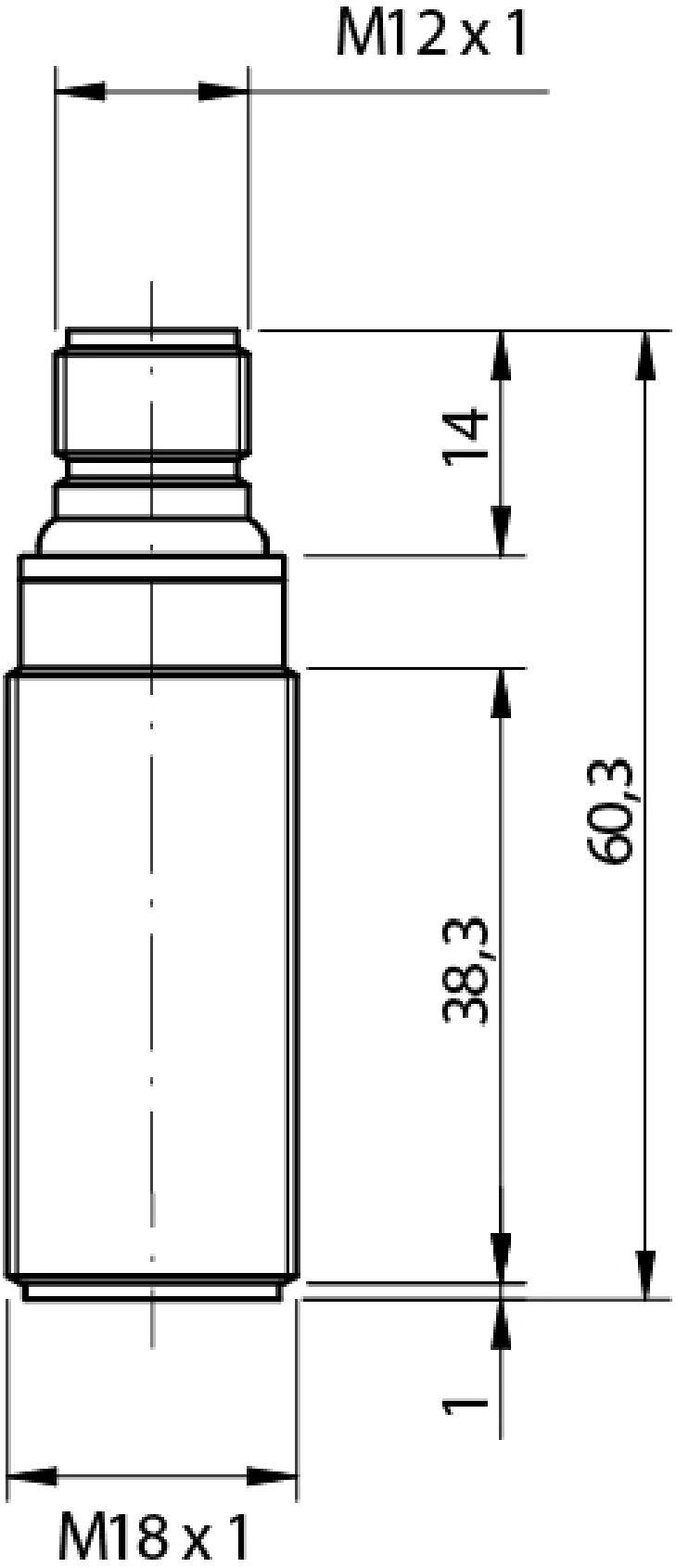


Response curves

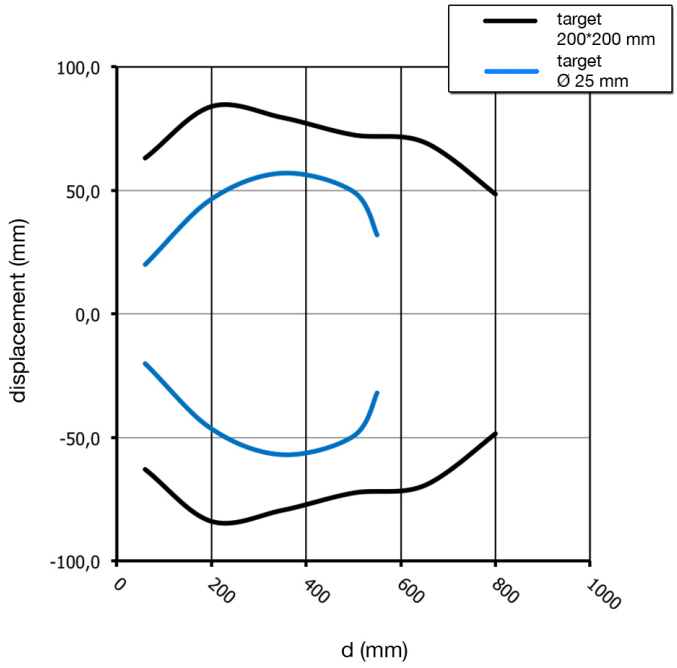


**Datasensing S.r.l.**
Strada S.Caterina, 235
41122 Modena (MO)
Tel. 059 420411
Fax 059 253973
E-mail
info@datasensing.com

**date of printing**
24/11/2026
05:03:26