

FC8

FC8U/0N-M307-1F

Ultrasonic slot labelling 3mm width

ULTRASONIC FORK SENSORS FOR LABELS DETECTION

OVERVIEW

- Ultrasonic fork sensor for transparent labels, any opaque material with connector M8 4-pole
- Teach-in models with dynamic and remote teach
- Ultrasonic technology
- Small size easy to locate; aluminum case
- NPN and PNP, LO/DO total configurable
- Width slit detection 3 mm; depth slit detection 69 mm
- Maximum switching frequency 1.500 Hz

TECHNICAL FEATURES

Detection properties

Nominal sensing distance	3mm
minimum detectable object	2mm
Si	Yes
Sensitivity adjustment	Yes
+/-50 µm a 150m/min	+/-20 µm at 120m/min

200 m/min	180 m/min
2mm	2mm

Outputs

Output type	NPN
Output Function	LO/DO selectable
Switching frequency	1.500Hz

Electrical data

Operating Voltage	12 - 24Vdc
No-Load supply current	≤ 45mA
Load current	100mA
Output voltage drop	≤ 2 V @ IL =100 mA
Max ripple content	≤ 10%
Time delay before availability	300ms
Short-circuit protection	Yes
Reverse Polarity Protection	Yes
Emission	Ultrasonic

Mechanical data

Dimensions	Width slot detection 3mm - Depth slot detection 69mm

Housing material	Painted aluminum
Weight	160g
Connections	M8 plug 4 pin
Operating temperature	+ 5°C…+ 55°C
Storage temperature	- 20°C…+ 70°C
Width slot detection	3mm
Depth slot detection	69mm

Test/Approvals

Approvals	CE UL
EMC compatibility	EN 60529
Degree of protection	IP65

Generical Data

Dimensions	Width slot detection 3mm - Depth slot detection 69mm
Operating Temperature	+ 5°C…+ 55°C
Mechanical Protection	IP65

CONNECTIONS

Eletrical diagram

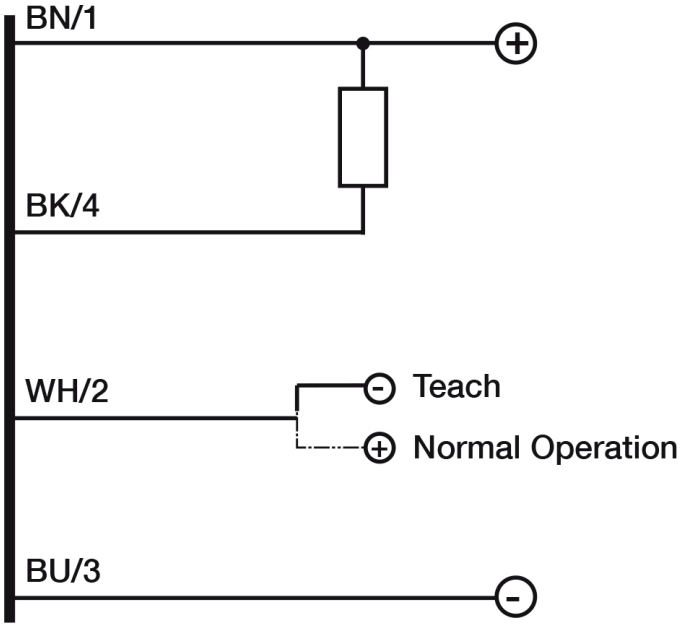

Connector

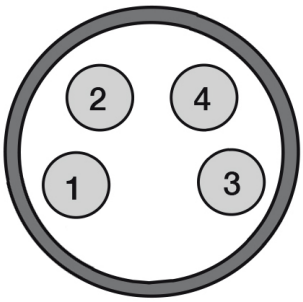

OTHERS

Dimensions

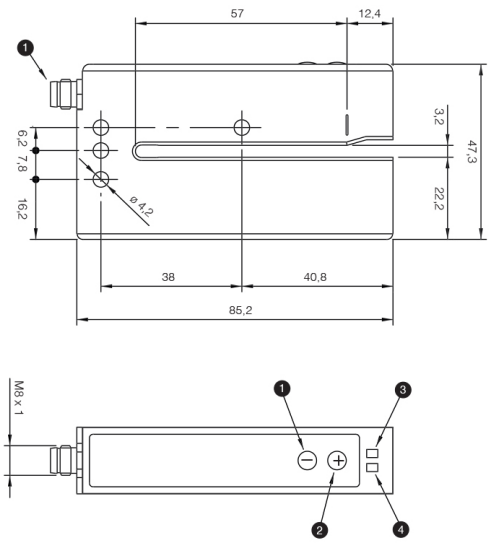

1. button -
2. button +
3. yellow LED, “ON” when the outputs are set to 1 (run)
4. red LED: keyboard lock and regulation

Datasensing S.r.l.
Strada S.Caterina, 235
41122 Modena (MO)
Tel. 059 420411
Fax 059 253973
E-mail
info@datasensing.com

date of printing
24/11/2026
06:58:23