

CD

CD12M/VB-100C1

Connect.M12-F,4 poles-10m-LED,PVC,90°

TECHNICAL FEATURES

Electrical data

Nominal current	4 A
Led	2 (Supply - PNP output pin 4)
Wires	4
Rated impulse voltage	2,5 kV
Nominal voltage	Max. 250 V ac/dc

Mechanical data

Connections	With open ended wires
Tightening torque	0,6 Nm
Operating temperature	=10°C...+80°C (flexible installation)-25°C...+80°C (fixed installation)
Fibre lengh (m)	10

Head type	90°
Plug	M12
Outer diameter	Ø 4,5 mm ± 5%
Jacket material	PVC CEI 2022 II OR
Wire isolation	PVC
Conductors section	0,25 mm2 (32 x 0,10 mm2)
Model	

Test/Approvals

Degree of protection	IP67

Generical Data

Operating Temperature	=10°C...+80°C (flexible installation)-25°C...+80°C (fixed installation)
Mechanical Protection	IP67

CONNECTIONS

Eletrical diagram

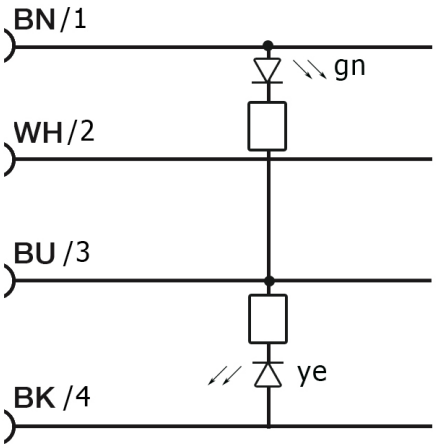

OTHERS

Dimensions

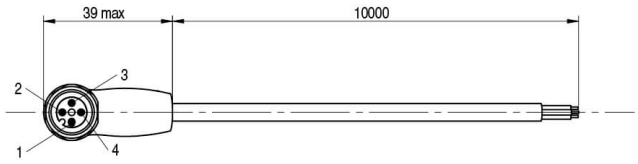

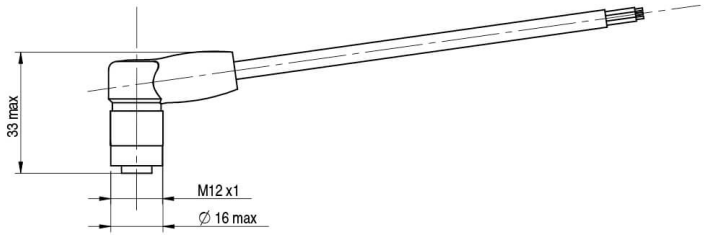

Datasensing S.r.l.
Strada S.Caterina, 235
41122 Modena (MO)

date of printing
25/11/2026
06:30:16

Tel. 059 420411
Fax 059 253973
E-mail
info@datasensing.com