

CF

CF/RBA-20

Optical fibre,E+R,Axial,Plastic,2m

PLASTIC OPTICAL FIBRES

OVERVIEW

- Wide range of models: ultra slim for small object, long distances, spiral tube for handling
- Wide range of flexible fibre heads (with sleeve)
- Wide range of cutting fibre units
- P67 protection degree
- SSF – FS1 – FX3 – FX4 series connectable
- Approvals: CE

TECHNICAL FEATURES

Detection properties

Distance with SSF	1.200 mm
Distance with FS1	1.200 mm
Distance with FX3	8.000 mm
Distance with FX4	10.000 mm
Distance with F1R	4.000 mm

Application

Function Principle	Emitter + Receiver
Description	Plastic optical fibres
Optic position	Axial

Mechanical data

Operating temperature	-40°C....+70°C (posa fissa)
Fibre lengh (m)	2
Ø optical fibre core	1 mm
Head shape	M7 with lenti
Optical fibre material	PE, plastic
Head material	nickel-plated brass

Test/Approvals

Degree of protection	IP67

Accessories

Accessories to be ordered separately	ST 28

Generical Data

Operating Temperature	-40°C....+70°C (posa fissa)
Mechanical Protection	IP67

OTHERS

Dimensions

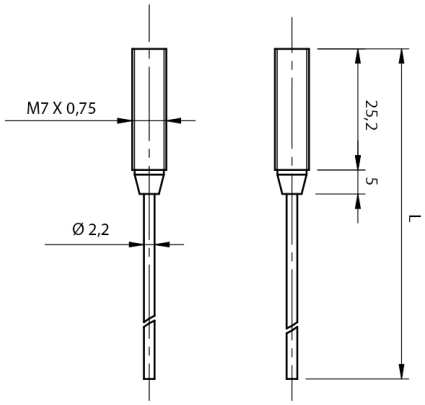

Datasensing S.r.l.
Strada S.Caterina, 235
41122 Modena (MO)
Tel. 059 420411
Fax 059 253973
E-mail
info@datasensing.com

date of printing
24/11/2026
05:44:49