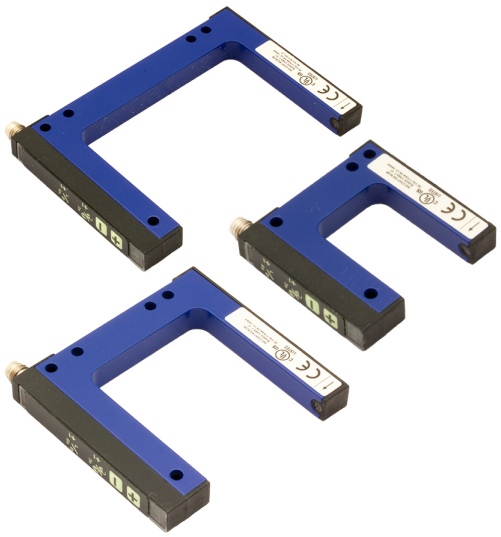

FC6

FC6I/0B-0510-1F

Slot 50mm width 95mm depth ADJ

PHOTOELECTRIC FORK FOR OBJECTS DETECTION WITH REGULATION

OVERVIEW

- Simple and accurate adjustment manually by -/+ buttons
- Infrared emission; LASER emission class 1
- Metal housing
- Light/Dark switching, selectable by button
- Minimum size object detection 0,2 mm (FC6I) and 0,05 mm (FC6L)
- -20…+60 °C temperature range
- M8 connectors (4pins): PNP/NPN, LO/DO
- Switching frequency 10 kHz

TECHNICAL FEATURES

Detection properties

Nominal sensing distance	50mm
minimum detectable object	0.2mm
Sensitivity adjustment	Teach-in

Application

Function Principle	Photoelectric slot

Outputs

Output type	NPN / PNP L/D Selectable
Output Function	L/D Selectable
Switching frequency	10kHz
Response time	50 μs

Electrical data

Operating Voltage	12...24VDC
No-Load supply current	≤ 40mA
Load current	≤100mA
Output voltage drop	≤2V@Iload=100mA
Max ripple content	≤10%
LED indicators	Yellow (status output), Red (adjustment or block keypad)
Time delay before availability	≤200ms
Short-circuit protection	Yes
Reverse Polarity Protection	Yes
Emission	LED Infrared
Interference to external light	5000lux (incandescent lamp), 10000lux (sunlight)

Mechanical data

Dimensions	Width slot detection 50mm - Depth slot detection 95mm
Housing material	Painted aluminium
Weight	100g
Connections	M8 plug 4pin
Active Head Material	Polyamide/glass
Operating temperature	- 20°C…+ 60°C
Storage temperature	- 30°C…+ 80°C
Width slot detection	50mm
Depth slot detection	95mm

Test/Approvals

Approvals	CE UL
EMC compatibility	EN 60947-5-2
Degree of protection	IP65

Generical Data

Dimensions	Width slot detection 50mm - Depth slot detection 95mm
Operating Temperature	- 10°C…+ 60°C (Without freeze)
Mechanical Protection	IP65

CONNECTIONS

Eletrical diagram

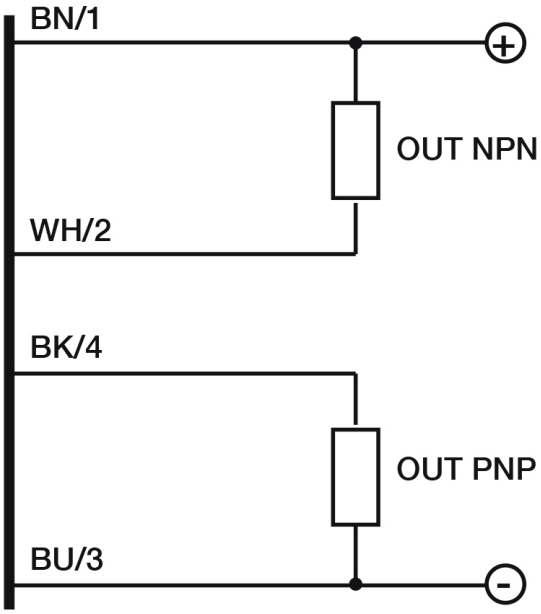

Connector

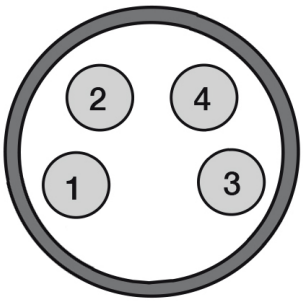

OTHERS

Dimensions

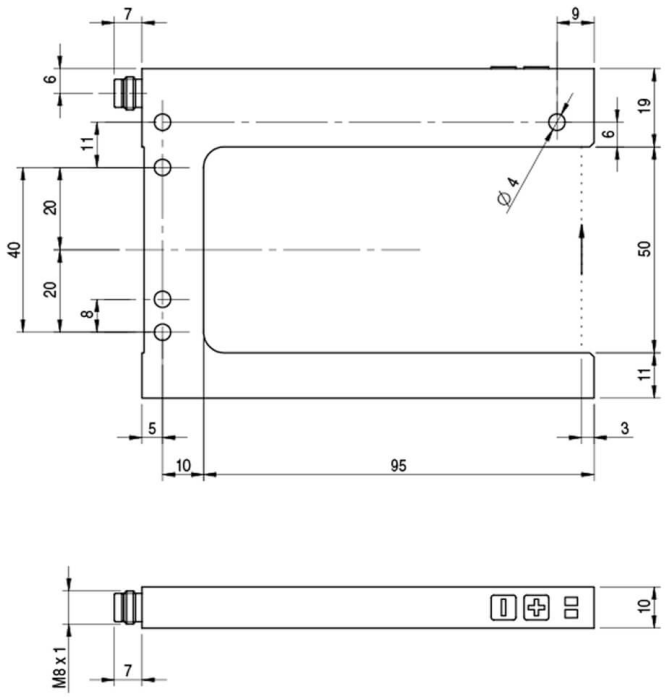

Datasensing S.r.l.
Strada S.Caterina, 235
41122 Modena (MO)
Tel. 059 420411
Fax 059 253973
E-mail
info@datasensing.com

date of printing
24/11/2026
07:09:28