

FC7

FC7I/0B-M304-0F

Slot labelling 3mm width IR

PHOTOELECTRIC FORK SENSORS FOR LABELS DETECTION

OVERVIEW

- Dinamic Teach-in or control panel and manual adjustment with “+/-” buttons
- Minimum object detection 2 mm (gap between labels), 2 mm (label size)
- Infrared emission
- Light/Dark switching, selectable by button
- Switching frequency 10 kHz
- M8 connectors (4 pins): PNP or NPN, LO/DO selectable
- -20 ...+60 °C temperature range

TECHNICAL FEATURES

Detection properties

Nominal sensing distance	3mm
minimum detectable object	2mm
Sensitivity adjustment	Teach-in
+/-50 µm a 150m/min	+/-50 µm at 150m/min
200 m/min	200 m/min

2mm	2mm

Application

Function Principle	Photoelectric slot

Outputs

Output type	NPN / PNP L/D Selectable
Output Function	L/D Selectable
Switching frequency	10Khz
Response time	50 μs

Electrical data

Operating Voltage	12...24VDC
No-Load supply current	≤ 35mA
Load current	≤100mA
Output voltage drop	≤2V@Iload=100mA
Max ripple content	≤10%
LED indicators	Yellow (status output), Red (adjustment or block keypad)
Time delay before availability	≤200ms
Reverse Polarity Protection	Yes
Emission	LED Infrared

Mechanical data

Dimensions	Width slot detection 3mm - Depth slot detection 42mm
Housing material	PA
Weight	35g
Connections	M8 plug 4pin
Operating temperature	- 20°C…+ 60°C
Storage temperature	- 30°C…+ 80°C
Width slot detection	3mm
Depth slot detection	42mm

Test/Approvals

Approvals	CE UL
EMC compatibility	EN 60947-5-2
Degree of protection	IP65

Generical Data

Dimensions	Width slot detection 3mm - Depth slot detection 42mm
Operating Temperature	- 20°C…+ 60°C (Without freeze)
Mechanical Protection	IP65

CONNECTIONS

Eletrical diagram

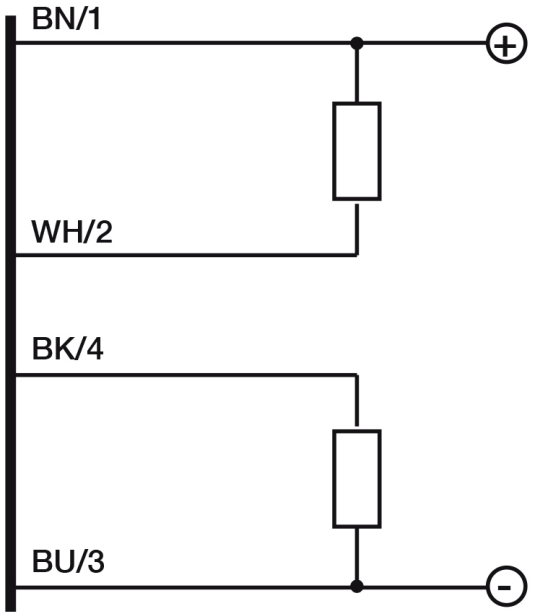

Connector

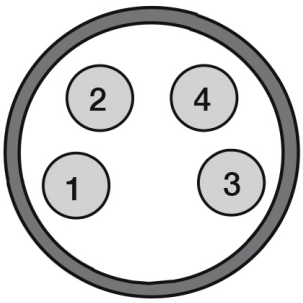

OTHERS

Dimensions

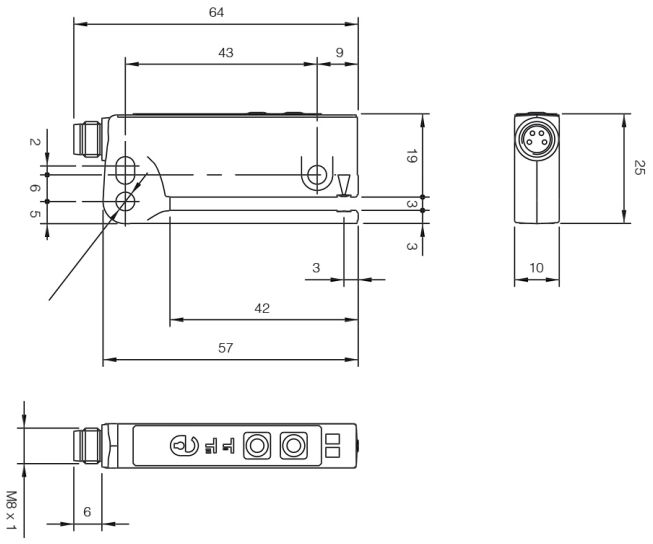

Datasensing S.r.l.
Strada S.Caterina, 235
41122 Modena (MO)
Tel. 059 420411
Fax 059 253973
E-mail
info@datasensing.com

date of printing
24/11/2026
05:03:16