

FS

FS1/0N-E

Photo.Midi,NPN-NO/NC,M12 90°,Fiber ampli

CUBIC AMPLIFIER UNIT FOR OPTICAL FIBRES - DC

OVERVIEW

- Extremely reduced dimensions amplifier units (only 49 x 26 x15 mm)
- Right angle cable exit or M12 plug cable for reducing the overall dimensions at minimum
- Trimmer for sensivity adjustment
- NPN or PNP outputs with selectable NO/NC
- Red light beam with visible spot
- Wide range of optical fibres (plastics and glass)
- Complete protection against electrical damage
- Fixing with M4 screws (2xM4, 20 mm step)

CE

TECHNICAL FEATURES

Detection properties

Nominal sensing distance	Depending on optical fibres used
Thermal drift of Sr	≤ 10% Sr
Repeat Accuracy	≤ 5%
Sensitivity adjustment	Trimmer

Application

Function Principle	Optic fiber amplifier
Optic position	Axial

Outputs

Output type	NPN L/D Selectable
Output Function	L/D Selectable
Switching frequency	1Khz
Response time	500µs

Electrical data

Operating Voltage	10…30VDC
No-Load supply current	≤ 30mA
Load current	≤100mA
Leakage current	≤ 10µA @ Vmax
Output voltage drop	≤1,2V@Iload=100mA
Max ripple content	≤10%
LED indicators	red (output state)
Time delay before availability	≤200ms
Short-circuit protection	Yes
Reverse Polarity Protection	Yes

Emission	LED Red (660nm)
Interference to external light	3.000lux (incandescent lamp), 10.000lux (sunlight)

Mechanical data

Dimensions	15x26x67 mm
Housing material	Polyammide
Weight	50 g
Connections	M12 plug 90°
Active Head Material	
Operating temperature	- 25°C…+ 70°C (without freeze)
Diameter/Dimension	Cubic

Test/Approvals

Approvals	CE
EMC compatibility	EN 60947-5-2
Shocks and vibrations	Vibration IEC 60068-2-6 / Shock IEC 60068-2-27
Degree of protection	IP67

Accessories

Supplied Accessories	ST07 mounting bracket and screws

Generical Data

Dimensions	15x26x67 mm
Operating Temperature	- 25°C…+ 70°C (Without freeze)
Mechanical Protection	IP67

CONNECTIONS

Eletrical diagram

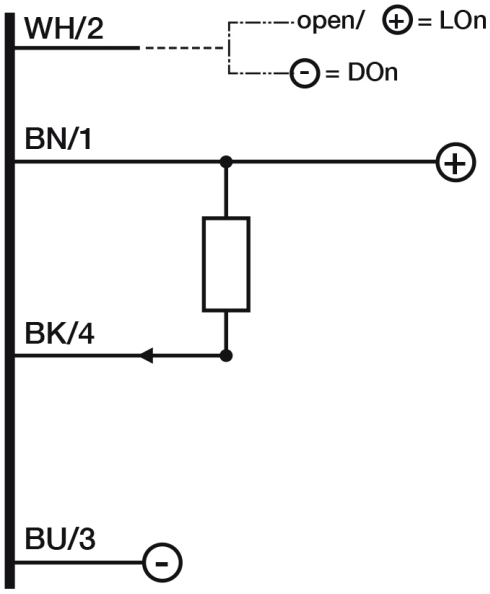

Connector

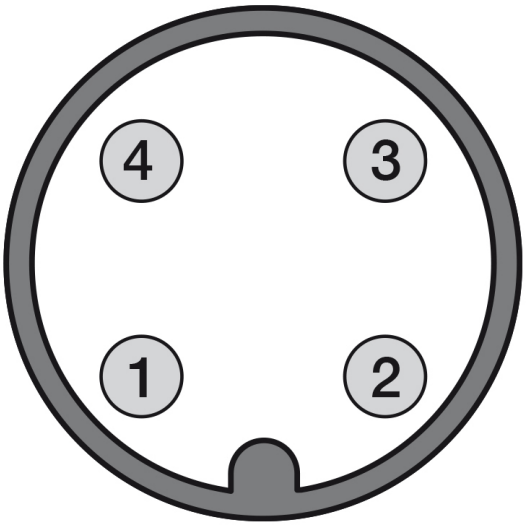

OTHERS

Dimensions

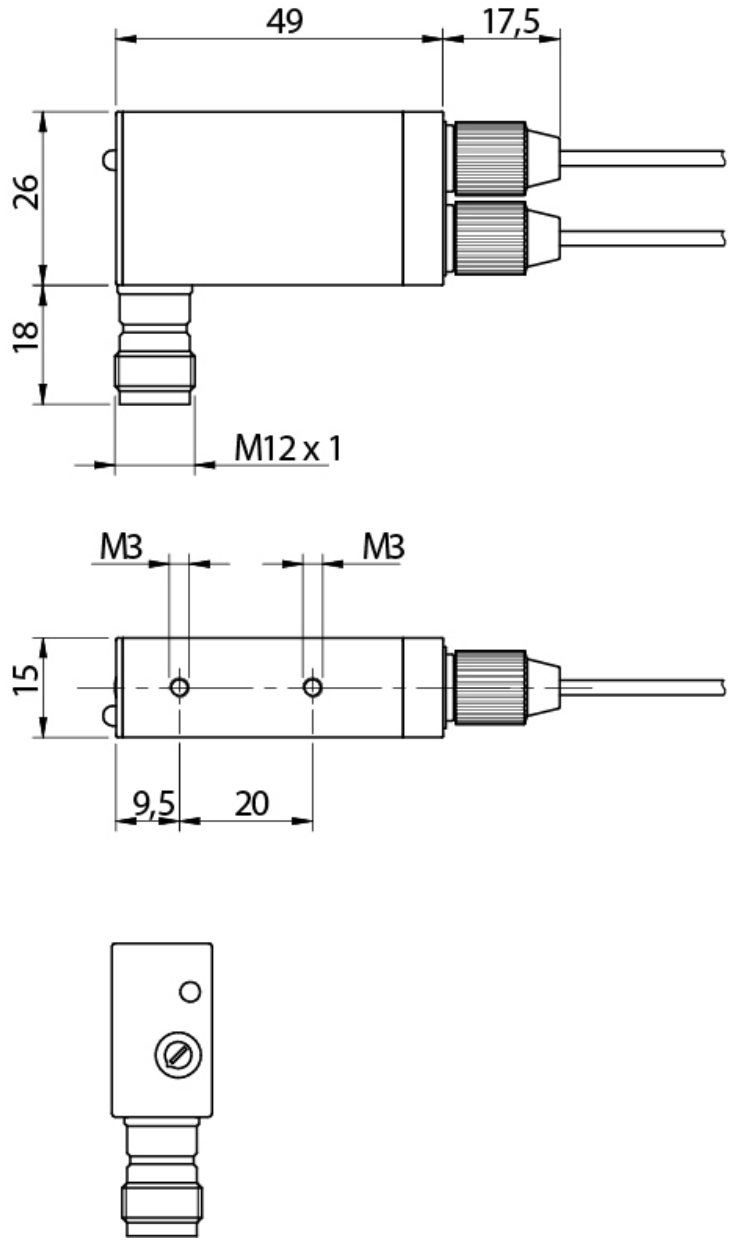

Datasensing S.r.l.
Strada S.Caterina, 235
41122 Modena (MO)
Tel. 059 420411
Fax 059 253973
E-mail
info@datasensing.com

date of printing
24/11/2026
06:06:48