


# FS

# FS1/0N-C

**Photo.Midi,NPN-NO/NC,Cable,Fiber ampli**

**CUBIC AMPLIFIER UNIT FOR OPTICAL FIBRES - DC**

## OVERVIEW

- Extremely reduced dimensions amplifier units (only 49 x 26 x15 mm)
- Right angle cable exit or M12 plug cable for reducing the overall dimensions at minimum
- Trimmer for sensivity adjustment
- NPN or PNP outputs with selectable NO/NC
- Red light beam with visible spot
- Wide range of optical fibres (plastics and glass)
- Complete protection against electrical damage
- Fixing with M4 screws (2xM4, 20 mm step)

CE

## TECHNICAL FEATURES

Detection properties

| | |
|---|---|
| Nominal sensing distance | Depending on optical fibres used |
| Thermal drift of Sr | ≤ 10% Sr |
| Repeat Accuracy | ≤ 5% |
| Sensitivity adjustment | Trimmer |

## Application

| | |
|---|---|
| Function Principle | Optic fiber amplifier |
| Optic position | Axial |

## Outputs

| | |
|---|---|
| Output type | NPN L/D Selectable |
| Output Function | L/D Selectable |
| Switching frequency | 1Khz |
| Response time | 500µs |

## Electrical data

| | |
|---|---|
| Operating Voltage | 10…30VDC |
| No-Load supply current | ≤ 30mA |
| Load current | ≤100mA |
| Leakage current | ≤ 10µA @ Vmax |
| Output voltage drop | ≤1,2V@Iload=100mA |
| Max ripple content | ≤10% |
| LED indicators | red (output state) |
| Time delay before availability | ≤200ms |
| Short-circuit protection | Yes |
| Reverse Polarity Protection | Yes |

| | |
|---|---|
| Emission | LED Red (660nm) |
| Interference to external light | 3.000lux (incandescent lamp), 10.000lux (sunlight) |

Mechanical data

| | |
|---|---|
| Dimensions | 15x26x67 mm |
| Housing material | Polyammide |
| Weight | 120 g |
| Connections | 2m PVC cable 90° |
| Active Head Material | |
| Operating temperature | - 25°C…+ 70°C (without freeze) |
| Diameter/Dimension | Cubic |

Test/Approvals

| | |
|---|---|
| Approvals | CE |
| EMC compatibility | EN 60947-5-2 |
| Shocks and vibrations | Vibration IEC 60068-2-6 / Shock IEC 60068-2-27 |
| Degree of protection | IP67 |

Accessories

| | |
|---|---|
| Supplied Accessories | ST07 mounting bracket and screws |

Generical Data

| | |
|---|---|
| Dimensions | 15x26x67 mm |
| Operating Temperature | - 25°C…+ 70°C (Without freeze) |
| Mechanical Protection | IP67 |

# CONNECTIONS

Eletrical diagram

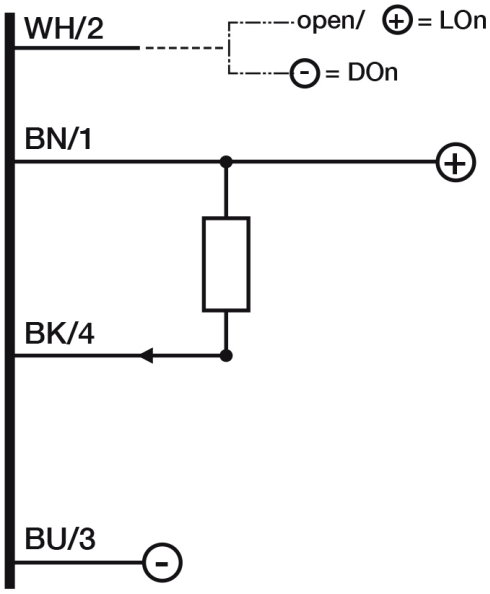


# OTHERS

Dimensions

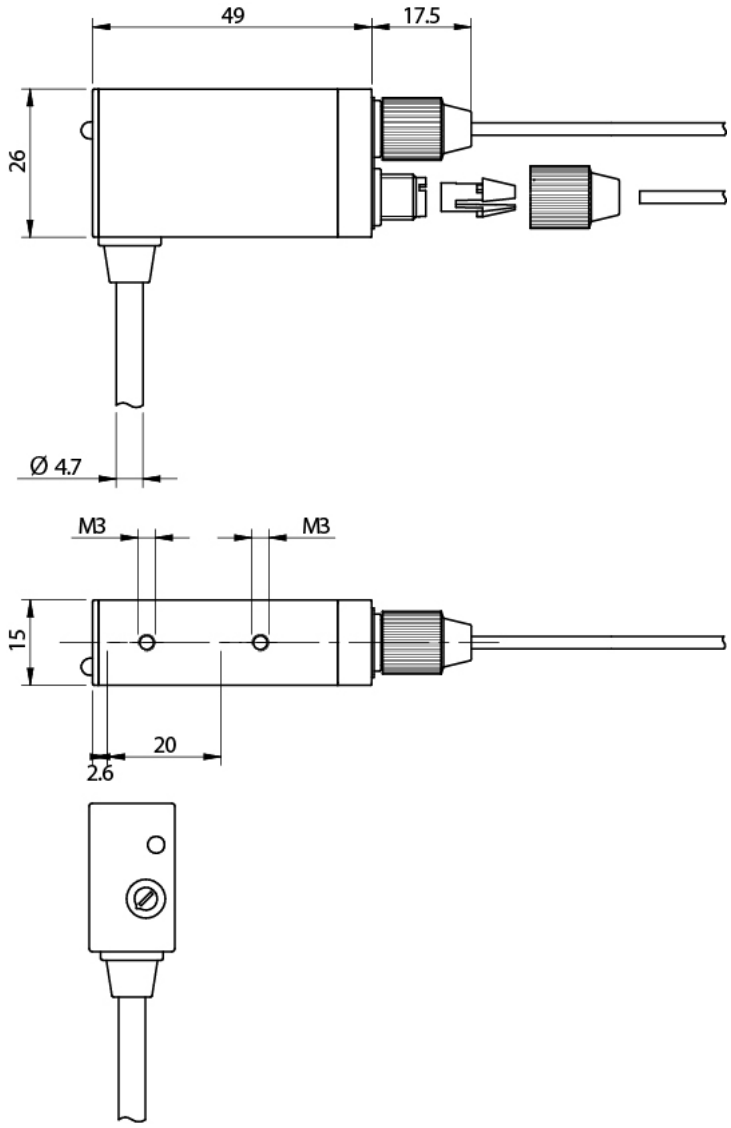


**Datasensing S.r.l.**
Strada S.Caterina, 235
41122 Modena (MO)
Tel. 059 420411
Fax 059 253973
E-mail
info@datasensing.com

**date of printing**
24/11/2026
09:49:12