

PS

PS2/AP-0C

Photo.Mini,PNP-NO,Cable 90°,Diffuse

DC MINIATURIZED CUBIC PHOTOELECTRIC SENSORS

OVERVIEW

- Wide range of models: diffuse, retro-reflective, through-beam
- Extremely reduced dimensions
- High sensing distance
- Sensitivity adjustment
- Standard cable exit or M12 plug exit
- LED status indicator
- IP65 protection degree
- Complete protection againts electrical damage

CE

TECHNICAL FEATURES

Detection properties

Nominal sensing distance	100mm
Thermal drift of Sr	≤ 10% Sr
Repeat Accuracy	≤ 5%
Sensitivity adjustment	Trimmer

Application

Function Principle	Diffuse reflection (short distance, ≤200mm)
Optic position	Axial

Outputs

Output type	PNP NO
Output Function	NO
Switching frequency	100Hz
Response time	5ms

Electrical data

Operating Voltage	10…30VDC
No-Load supply current	≤ 30mA
Load current	≤100mA
Leakage current	≤ 10μA @ Vmax
Output voltage drop	≤1,2V@Iload=100mA
Max ripple content	≤10%
LED indicators	red (output state)
Time delay before availability	≤200ms
Short-circuit protection	Yes
Reverse Polarity Protection	Yes

Emission	LED Infrared (880nm)
Interference to external light	3000lux Incandescent Lamp, 10000lux

Mechanical data

Dimensions	15x49x26mm
Material	
Housing material	ABS
Weight	90g
Connections	2m PVC cable 90°
Active Head Material	PMMA
Operating temperature	- 25°C…+ 70°C (without freeze)
Diameter/Dimension	Cubic

Test/Approvals

Approvals	CE
EMC compatibility	EN 60947-5-2
Shocks and vibrations	Vibration IEC 60068-2-6 / Shock IEC 60068-2-27
Degree of protection	IP65

Accessories

Supplied Accessories	ST07 mounting bracket and screws

Generical Data

Dimensions	15x49x26mm
Operating Temperature	- 25°C…+ 70°C (Without freeze)
Mechanical Protection	IP65

CONNECTIONS

Eletrical diagram

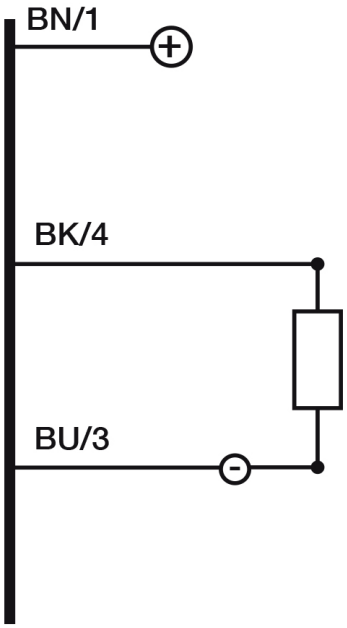

OTHERS

Dimensions

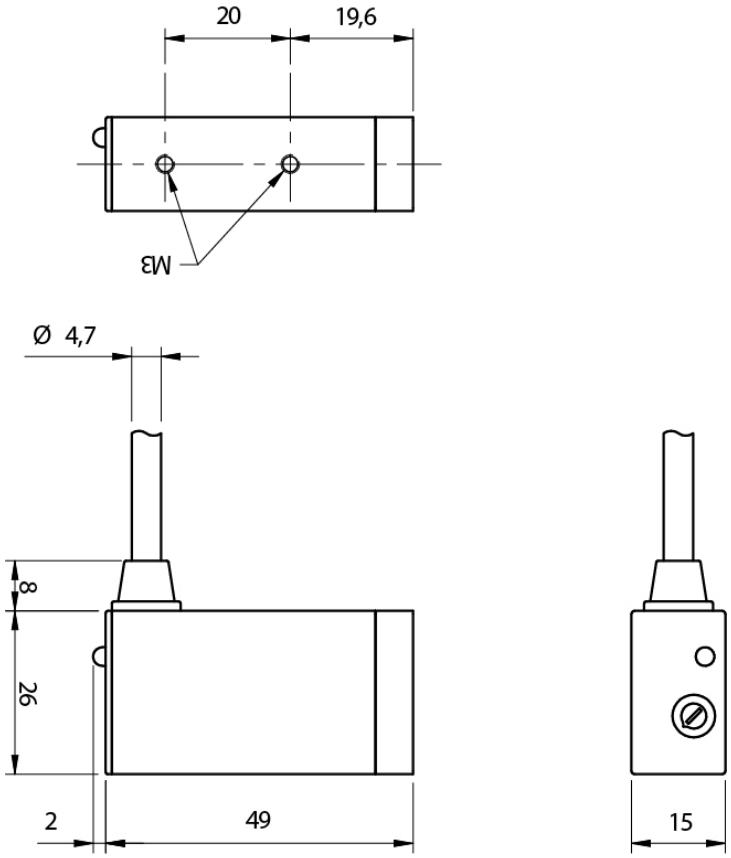

Response curves

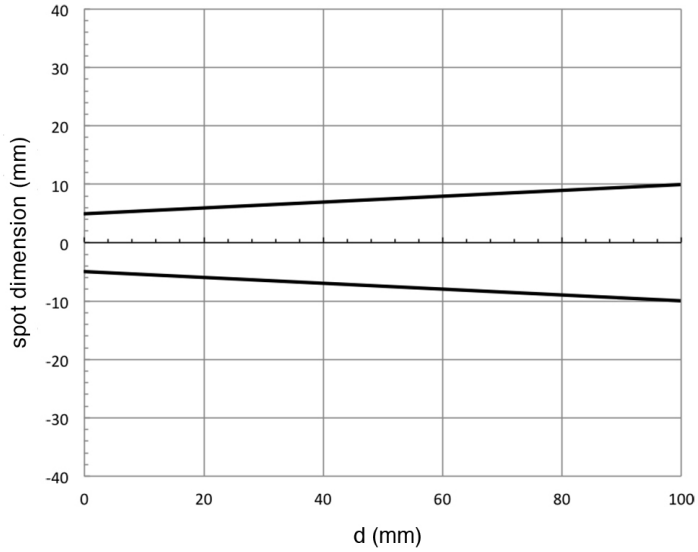

Datasensing S.r.l.
Strada S.Caterina, 235
41122 Modena (MO)
Tel. 059 420411

date of printing
24/11/2026
05:17:11

Fax 059 253973
E-mail
info@datasensing.com