

FAL

FAL4/BP-0E

Photo.M18,Laser emiss.,PNP-NO+NC,M12 plug,Diffuse

M18 PHOTOELECTRIC SENSORS DC LASER EMISSION

OVERVIEW

- Complete range of M18 sensors with 10...30 Vdc power supply
- Axial and radial optic with flat surface
- Visible red laser emission models
- IP67 protection degree
- Metallic or plastic housing
- Sensitivity adjustment available for all models
- Total protection against any type of electric damages
- Approvals: CE and cULus listed

TECHNICAL FEATURES

Detection properties

Nominal sensing distance	300mm
Thermal drift of Sr	≤10% Sr
Repeat Accuracy	5%
Sensitivity adjustment	Teach-in

Application

Function Principle	Diffuse reflection (medium distance, ≤600mm)
Notes	(Focalized 100mm) white target 90% Kodak 200x200mm
Optic position	Axial

Outputs

Output type	PNP NO+NC
Output Function	NO+NC
Switching frequency	800Hz
Response time	625µs

Electrical data

Operating Voltage	10…30VDC
No-Load supply current	≤ 30mA
Load current	≤100mA
Leakage current	≤10µA
Output voltage drop	≤2V@Iload=100mA
Max ripple content	≤10%
LED indicators	Green power supply/yellow (LightON EG≥2)/yellow flashing (LightON 1<EG<2)
Time delay before availability	≤200ms
Short-circuit protection	Short circuit (autoreset), Overvoltage

Reverse Polarity Protection	Polarity inversal, Inpulsive voltage
Emission	LASER Red (650nm) class1
Interference to external light	3000lux (incandescent lamp), 10000lux (sunlight)

Mechanical data

Dimensions	M18x1/L=97,6mm
Housing material	PBT / PC plug
Weight	30g
Connections	M12 plug
Active Head Material	Glass / PC
Tightening torque	1Nm
Operating temperature	-15°C...+ 55°C (Without freeze)
Diameter/Dimension	M18

Test/Approvals

Approvals	CE cULus
EMC compatibility	EN 60947-5-2
Shocks and vibrations	Vibration IEC 60068-2-6 / Shock IEC 60068-2-27
Degree of protection	IP67

Accessories

Supplied Accessories	nuts M18 x 1, screwdriver

Generical Data

Dimensions	M18x1/L=97,6mm
Operating Temperature	- 15°C...+ 55°C (Without freeze)
Mechanical Protection	IP67

CONNECTIONS

Eletrical diagram

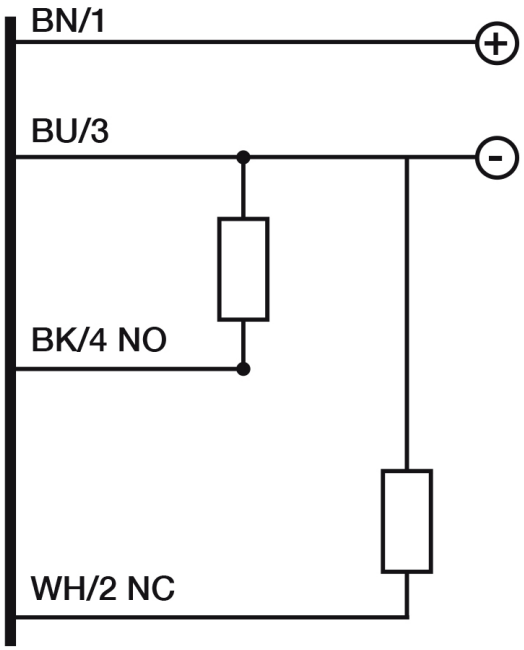

Connector

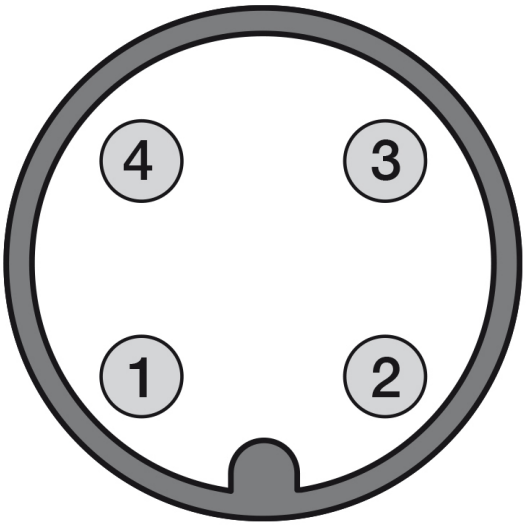

OTHERS

Dimensions

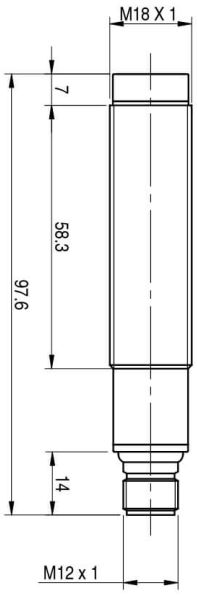

Response curves

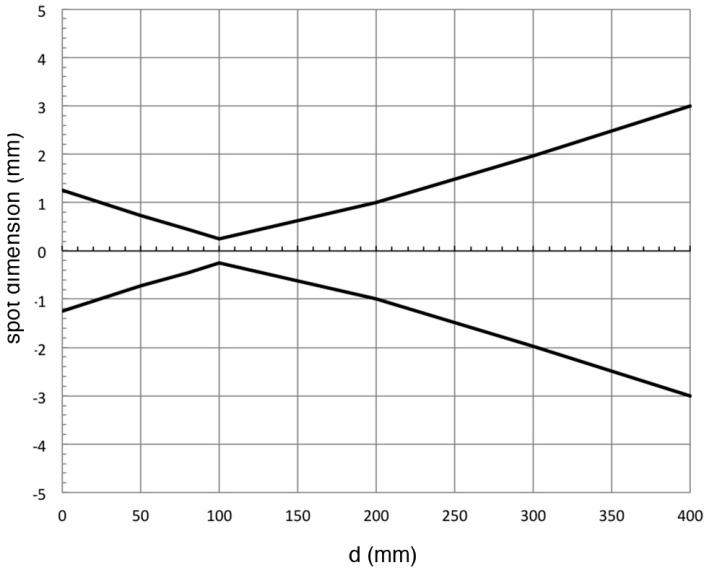

Datasensing S.r.l.
Strada S.Caterina, 235
41122 Modena (MO)
Tel. 059 420411
Fax 059 253973
E-mail
info@datasensing.com

date of printing
24/11/2026
05:02:15