

DM

DM3/0P-1H

Photo.M12,PNP-NO/NC,M12 plug,Diffuse

M12 CYLINDRICAL PHOTOELECTRIC SENSORS

OVERVIEW

- Models diffuse reflection, polarized and through-beam
- Local and remote teach-in function
- Light-on / Dark-on selectable outputs
- IP67 protection degree
- Multifunction LED status indicator
- Complete protection against electrical damages
- Approvals: CE and cULus listed

TECHNICAL FEATURES

Detection properties

Nominal sensing distance	100mm
Thermal drift of Sr	≤10% Sr
Repeat Accuracy	5%
Sensitivity adjustment	Teach-in

Application

Function Principle	Diffuse reflection (short distance, ≤200mm)
Notes	white target Kodak 90% 100 x 100mm
Optic position	Axial

Outputs

Output type	PNP L/D Selectable
Output Function	L/D Selectable
Switching frequency	400Hz
Response time	1,25ms

Electrical data

Operating Voltage	10…30VDC
No-Load supply current	≤ 30mA
Load current	≤100mA
Leakage current	≤10µA
Output voltage drop	≤2V@Iload=100mA
Max ripple content	≤10%
LED indicators	Yellow (status output)
Time delay before availability	≤150ms
Short-circuit protection	Yes

Reverse Polarity Protection	Yes
Emission	LED Infrared (880nm)
Interference to external light	3.000lux (incandescent lamp), 10.000lux (sunlight)
Impulsive Overvoltage Protection	Yes

Mechanical data

Dimensions	M12x1/L=65,5mm
Housing material	Nickel plated brass
Weight	28g
Connections	M12 plug
Active Head Material	PMMA
Operating temperature	- 25°C…+ 70° C
Diameter/Dimension	M12

Test/Approvals

Approvals	CE cULus
EMC compatibility	EN 60947-5-2
Shocks and vibrations	Vibration IEC 60068-2-6 / Shock IEC 60068-2-27
Degree of protection	IP67

Accessories

Supplied Accessories	nuts M12 x 1

Generical Data

Dimensions	M12x1/L=65,5mm
Operating Temperature	- 25°C…+ 70°C (Without freeze)
Mechanical Protection	IP67

CONNECTIONS

Eletrical diagram

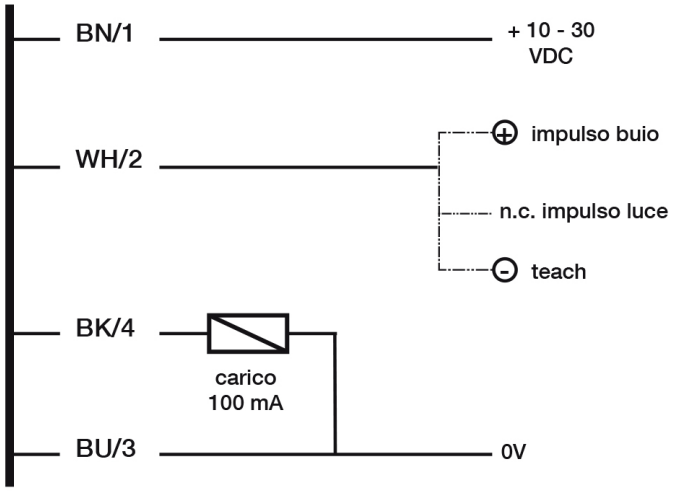

Connector

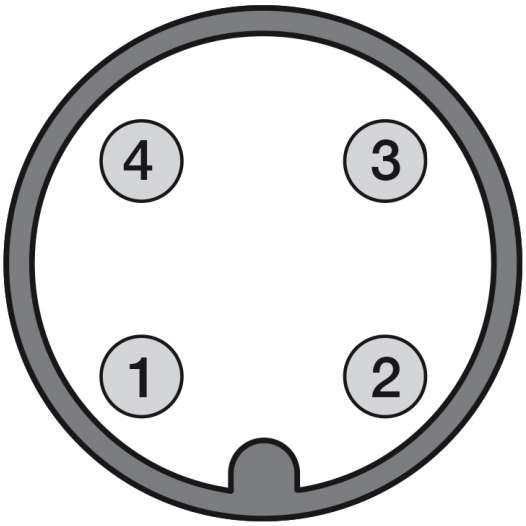

OTHERS

Dimensions

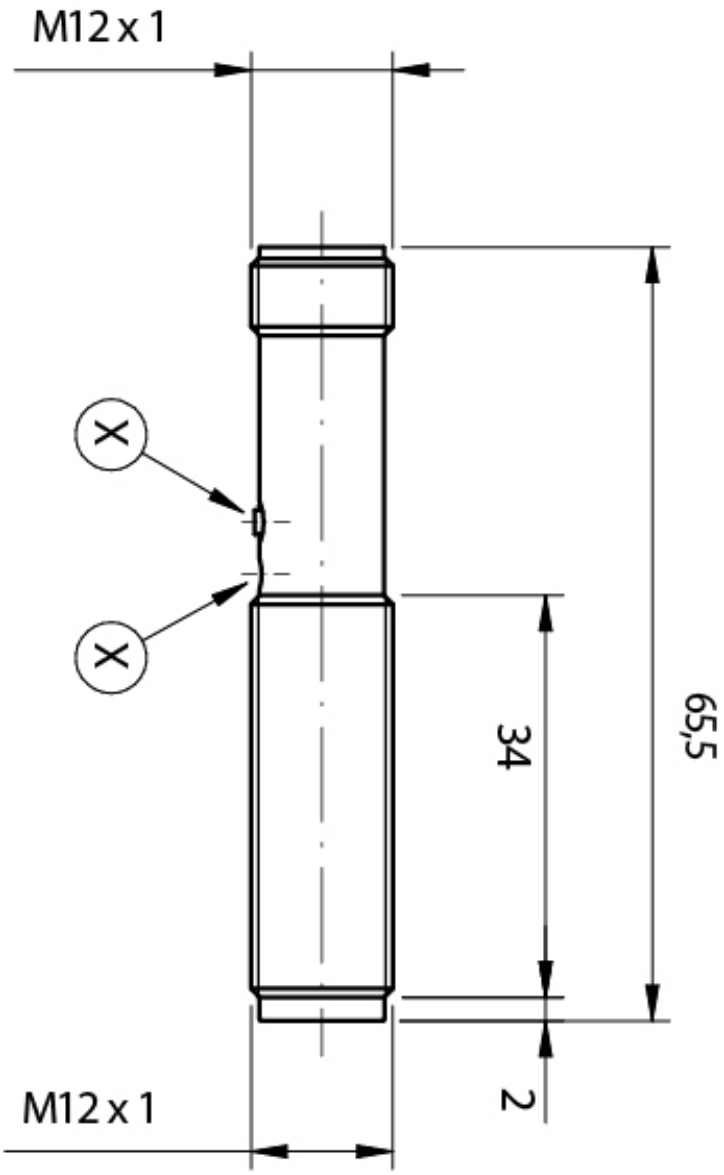

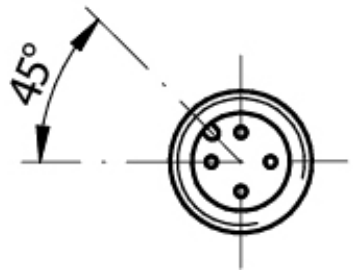

Response curves

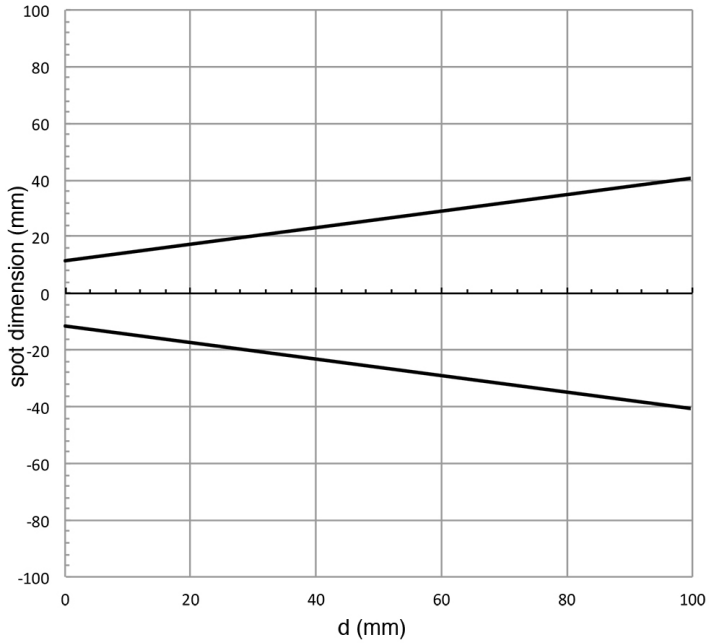

Datasensing S.r.l.
Strada S.Caterina, 235
41122 Modena (MO)
Tel. 059 420411
Fax 059 253973
E-mail
info@datasensing.com

date of printing
24/11/2026
05:01:59