

MS-MP

MSC/00-0C

Photo.M18,NPN/PNP-NO/NC,Cable 90°,Dif
M18 DECOUT® DC OUTPUT

OVERVIEW

- Wide range of models: diffuse, retro-reflective, polarized, through-beam detec□tion and background suppression
- Through-beam models with high sensing range
- Retro-reflective models with red visible polarized light
- Models with right angle optic (MP)
- Background suppression models with fixed distance
- Check function available for all through-beam models
- Complete protection against electrical damage

TECHNICAL FEATURES

Detection properties

Nominal sensing distance	4,5m
Thermal drift of Sr	≤10% Sr
Repeat Accuracy	5%
Sensitivity adjustment	No

Application

Function Principle	Retroreflex
Notes	On RL110 reflector
Optic position	Axial

Outputs

Output type	Decout NPN/PNP Selectable NO/NC Selectable
Output Function	NO/NC Selectable
Switching frequency	80Hz
Response time	6,25ms

Electrical data

Operating Voltage	10…30VDC
No-Load supply current	≤ 30mA
Load current	≤100mA
Leakage current	≤10μA
Output voltage drop	≤1,2V@Iload=100mA
Max ripple content	≤10%
LED indicators	Red (status output)
Time delay before availability	≤200ms
Short-circuit protection	Short circuit (autoreset), Overvoltage

Emission	LED Infrared (880nm)
Interference to external light	3000lux (incandescent lamp), 10000lux (sunlight)
Impulsive Overvoltage Protection	Impulsive Overvoltage Protection

Mechanical data

Dimensions	M18 x 1 /L =78,6mm
Housing material	PBT / PC cable exit
Weight	70g
Connections	2m PVC cable 90°
Active Head Material	PMMA
Tightening torque	1Nm
Operating temperature	25°C..+ 70° C (Without freeze)
Diameter/Dimension	M18

Test/Approvals

Approvals	CE cURus
EMC compatibility	EN 60947-5-2
Shocks and vibrations	Vibration IEC 60068-2-6 / Shock IEC 60068-2-27
Degree of protection	IP67

Accessories

Supplied Accessories	nuts M18 x 1

Generical Data

Dimensions	M18 x 1 /L =78,6mm
Operating Temperature	- 25°C…+ 70°C (Without freeze)
Mechanical Protection	IP67

CONNECTIONS

Eletrical diagram

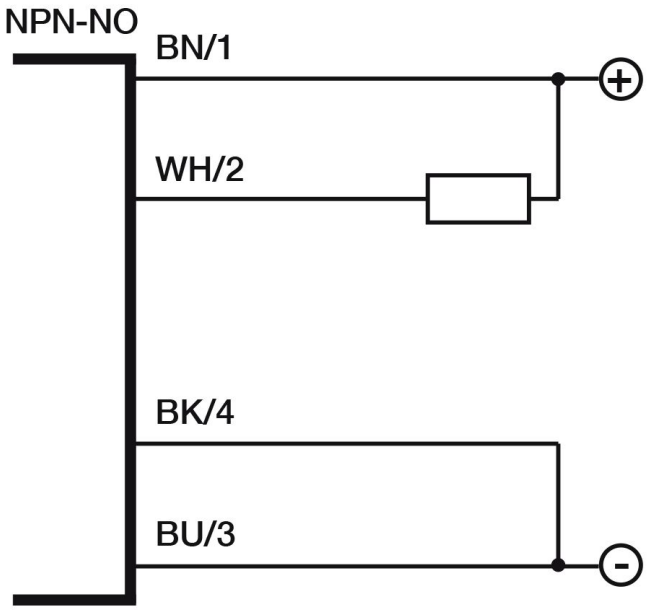

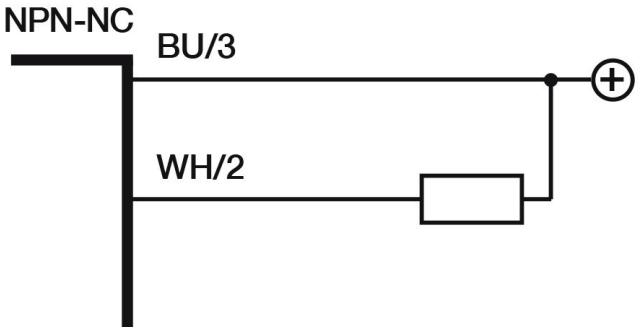

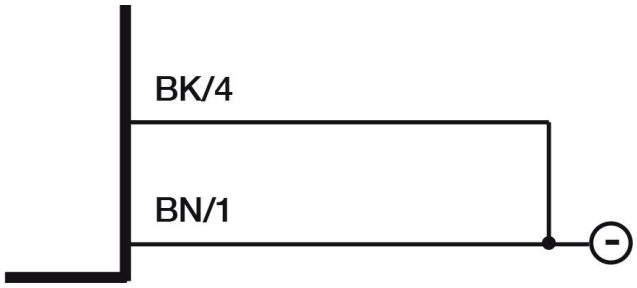

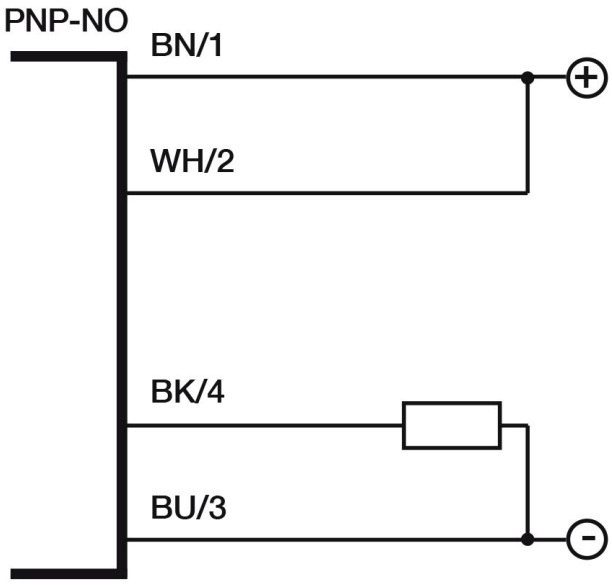

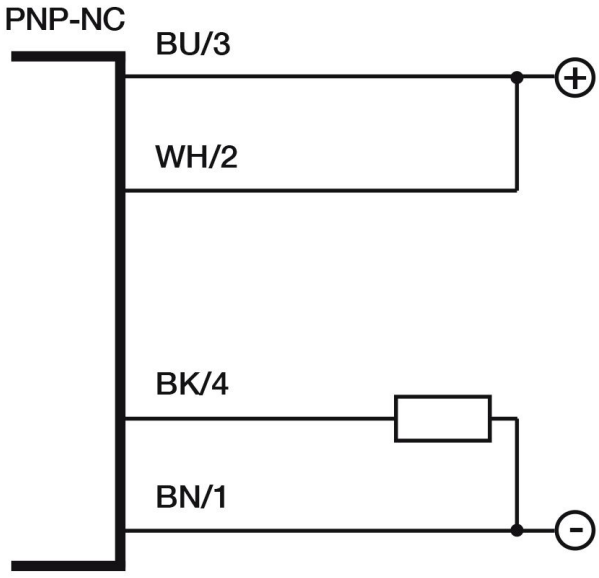

OTHERS

Dimensions

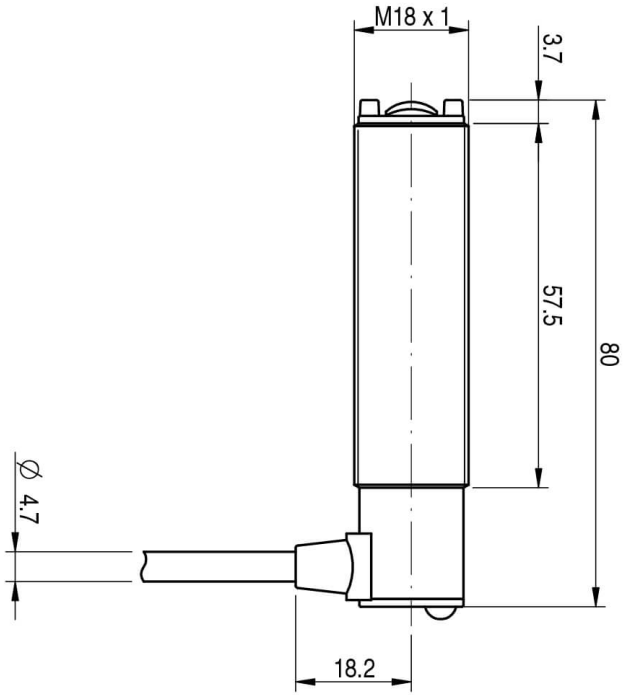

Response curves

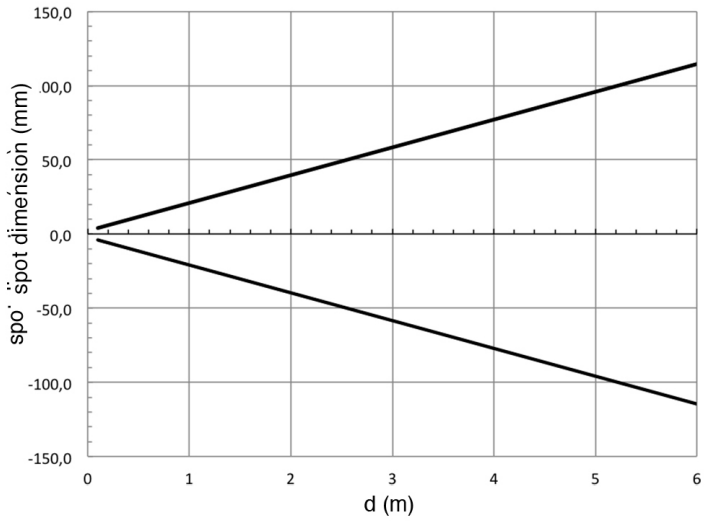

Datasensing S.r.l.
Strada S.Caterina, 235
41122 Modena (MO)
Tel. 059 420411
Fax 059 253973
E-mail

date of printing
24/11/2026
05:52:29

info@datasensing.com