

SS-SP

SSP/DP-1E

Photo.M18,PNP-DO,M12 plug,Reflex
M18 DC WITH LATERAL ADJUSTMENT

OVERVIEW

- Models with side sens. adjustment on axial and right angle optic
- LO/DO selectable output
- ATEX models, cat. 3, available on request
- LED status indicator for all versions
- Complete protection against electrical damages
- IP67 protection degree for all models
- Approvals: CE and cULus listed

TECHNICAL FEATURES

Detection properties

Nominal sensing distance	4m
Thermal drift of Sr	≤10% Sr
Repeat Accuracy	5%
Sensitivity adjustment	No

Application

Function Principle	Polarized

Notes	On RL110 reflector
Optic position	Axial

Outputs

Output type	PNP Don
Output Function	Don
Switching frequency	250Hz
Response time	2ms

Electrical data

Operating Voltage	10…30VDC
No-Load supply current	≤ 30mA
Load current	≤100mA
Leakage current	≤10µA
Output voltage drop	≤1,2V@Iload=100mA
Max ripple content	≤10%
LED indicators	Yellow (status output)
Time delay before availability	≤200ms
Short-circuit protection	Yes
Reverse Polarity Protection	Yes

Emission	LED Red (660nm)
Interference to external light	3000lux (incandescent lamp), 10000lux (sunlight)
Impulsive Overvoltage Protection	Yes

Mechanical data

Dimensions	M18 x 1 /L =78mm
Housing material	Nickel plated brass / PC plug
Weight	100g
Connections	M12 plug
Active Head Material	PMMA
Tightening torque	25Nm
Operating temperature	- 25°C…+ 70° C (Without freeze)
Diameter/Dimension	M18

Test/Approvals

Approvals	CE cULus
EMC compatibility	EN 60947-5-2
Shocks and vibrations	Vibration IEC 60068-2-6 / Shock IEC 60068-2-27
Degree of protection	IP67

Accessories

Supplied Accessories	nuts M18 x 1

Generical Data

Dimensions	M18 x 1 /L =78mm
Operating Temperature	- 25°C…+ 70°C (Without freeze)
Mechanical Protection	IP67

CONNECTIONS

Eletrical diagram

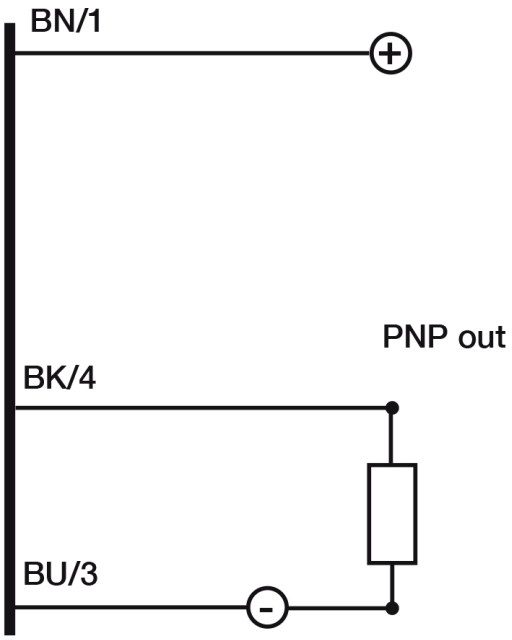

Connector

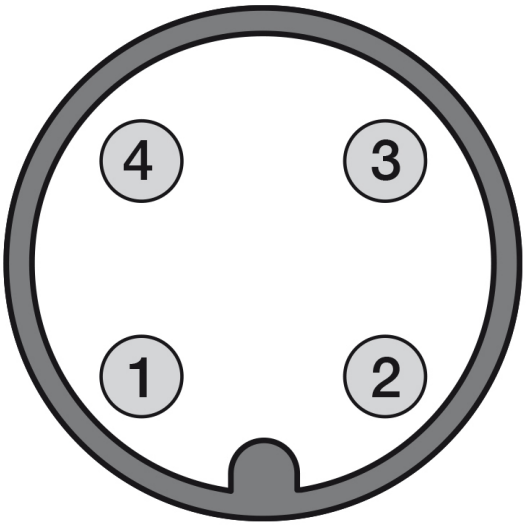

OTHERS

Dimensions

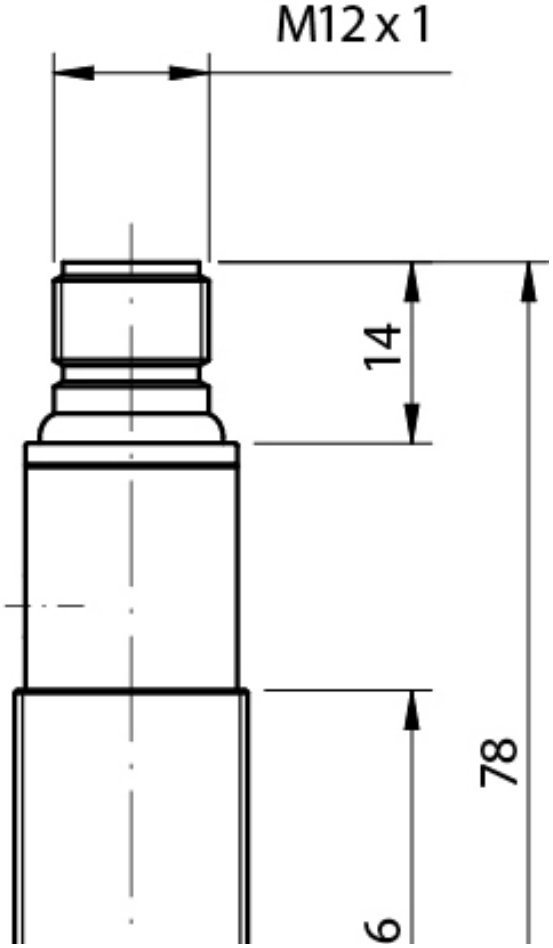

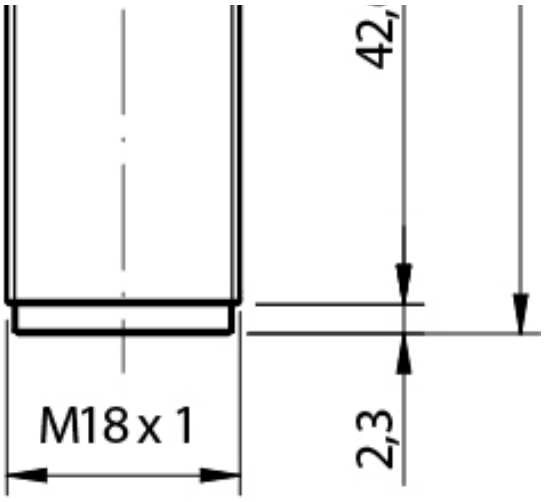

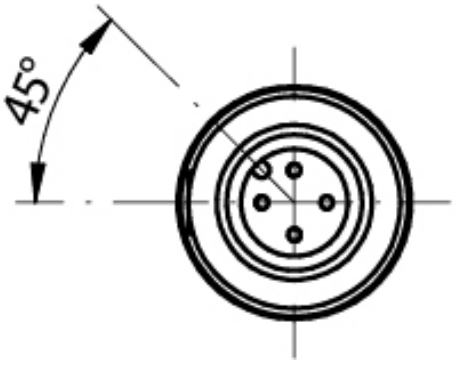

Response curves

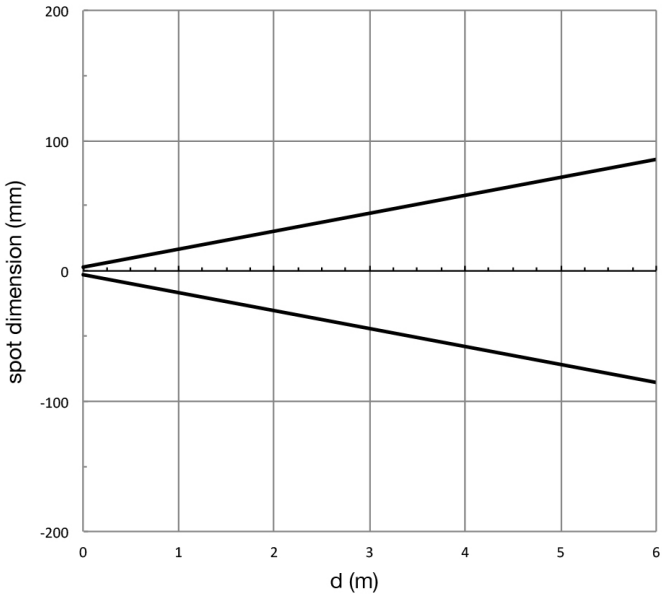

Datasensing S.r.l.
Strada S.Caterina, 235
41122 Modena (MO)
Tel. 059 420411
Fax 059 253973
E-mail
info@datasensing.com

date of printing
24/11/2026
09:49:05