

IL5

IL5/AP-3AVF80

Ind.5x5,PNP-NO,Pigtail M8,Sch-LD

5 X 5 MM CUBIC MINIATURIZED INDUCTIVE SENSORS

OVERVIEW

- Complete range of cubic inductive sensors IL8 series: 5x5x25 mm
- IP67 protection degree

CE

TECHNICAL FEATURES

Detection properties

Nominal sensing distance	1,5mm
Operanting distance	0…1,21mm
Standard target	5x5mm FE360
Correction Factor	copper: 0,37 ± 10% / aluminium: 0,30 ± 10% / brass: 0,40 ± 10% / stainless steel: 0,67 ± 10%
Thermal drift of Sr	< 10%
Repeat Accuracy	< 5% (UB 24V Ta=23°C ±5°C)

Hysteresis	1 … 20%

Application

Description	5x5x25mm cubic flush mount
Functions	Proximity

Outputs

Output type	PNP
Output Function	NO
Switching frequency	≤ 7kHz

Electrical data

Operating Voltage	10...30Vdc
No-Load supply current	≤ 10mA
Load current	≤ 100mA
Leakage current	≤ 10µA
Output voltage drop	≤ 1,5V @100mA
Max ripple content	≤ 10%
LED indicators	Blue LED output state
Time delay before availability	≤ 50ms
Short-circuit protection	Yes
Reverse Polarity Protection	Yes

Impulsive Overvoltage Protection	Yes
Protection against inductive loads	Yes

Mechanical data

Dimensions	5 x 5 / L = 25mm
Mounting	Shielded
Material	AISI303 Stainless Steel
Housing material	AISI303 Stainless Steel
Weight	15g
Connections	200mm PUR Cable + M8 Plug
Active Head Material	PBT
Operating temperature	-25°C…+70°C
Diameter/Dimension	5x5x25mm

Test/Approvals

Approvals	CE
EMC compatibility	IEC 60947-5-2
Shocks and vibrations	Vibration IEC 60068-2-6 / Shock IEC 60068-2-27
Degree of protection	IP67

Accessories

Supplied Accessories	2 screws 1.6x0.35 L10mm

Generical Data

Dimensions	5 x 5 / L = 25mm
Operating Temperature	-25°C…+70°C
Mechanical Protection	IP67

CONNECTIONS

Eletrical diagram

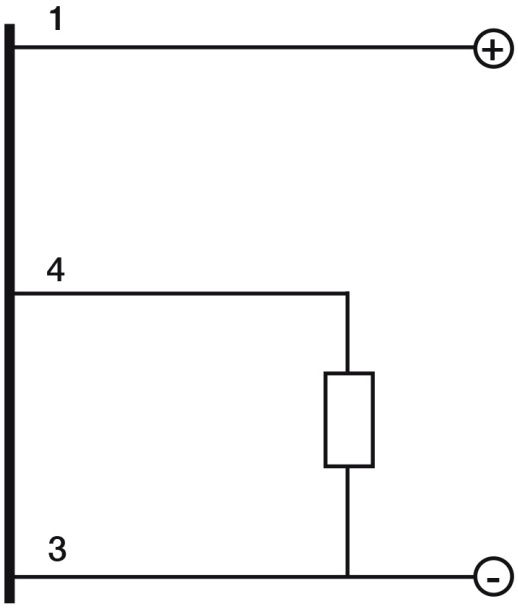

Connector

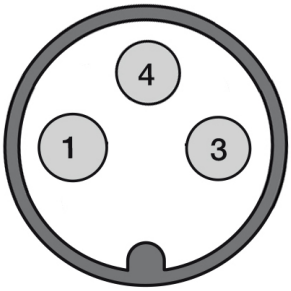

OTHERS

Dimensions

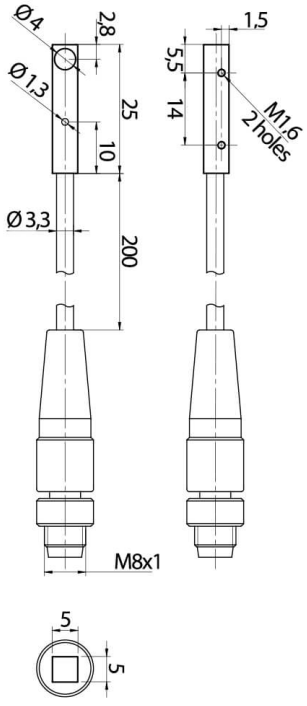

Datasensing S.r.l.
Strada S.Caterina, 235
41122 Modena (MO)

date of printing
24/11/2026
05:17:42

Tel. 059 420411
Fax 059 253973
E-mail
info@datasensing.com