

IL8/IL9

IL8/AN-1F

Ind.8x8,NPN-NO,M8 plug,Sch-STD

8 X 8 MM CUBIC MINIATURIZED INDUCTIVE SENSORS

OVERVIEW

- Complete range of cubic inductive sensors:
  1. IL8 series: 8x8 mm with sensing head at the top2. IL9 series: 8x8 mm with sensing head at the centre
- IP67 protection degree

TECHNICAL FEATURES

Detection properties

Nominal sensing distance	1,5mm
Operanting distance	0…1,21mm
Standard target	8x8mm FE360
Correction Factor	copper: 0,15 / aluminium: 0,12 / brass: 0,25 / stainless steel: 0,61
Thermal drift of Sr	< 10%
Repeat Accuracy	< 5% (UB 24V Ta=23°C ±5°C)

Hysteresis	1 … 20%

Application

Description	8x8x59mm cubic flush mount
Functions	Proximity

Outputs

Output type	NPN
Output Function	NO
Switching frequency	≤ 5kHz

Electrical data

Operating Voltage	10...30Vdc
No-Load supply current	≤ 10mA
Load current	≤ 200mA
Leakage current	≤ 10µA
Output voltage drop	≤ 1,5V @200mA
Max ripple content	≤ 10%
LED indicators	Blue LED output state
Time delay before availability	≤ 50ms
Short-circuit protection	Yes

Reverse Polarity Protection	Yes
Impulsive Overvoltage Protection	Yes
Protection against inductive loads	Yes

Mechanical data

Dimensions	8 x 8 / L = 59mm / active head in the top
Mounting	Shielded
Material	AISI303 Stainless Steel
Housing material	AISI303 Stainless Steel
Weight	15g
Connections	M8 Plug
Active Head Material	PBT
Operating temperature	-25°C…+70°C
Diameter/Dimension	8x8x59mm

Test/Approvals

Approvals	CE cULus
EMC compatibility	IEC 60947-5-2
Shocks and vibrations	Vibration IEC 60068-2-6 / Shock IEC 60068-2-27
Degree of protection	IP67

Generical Data

Dimensions	8 x 8 / L = 59mm / active head in the top
Operating Temperature	-25°C…+70°C
Mechanical Protection	IP67

CONNECTIONS

Eletrical diagram

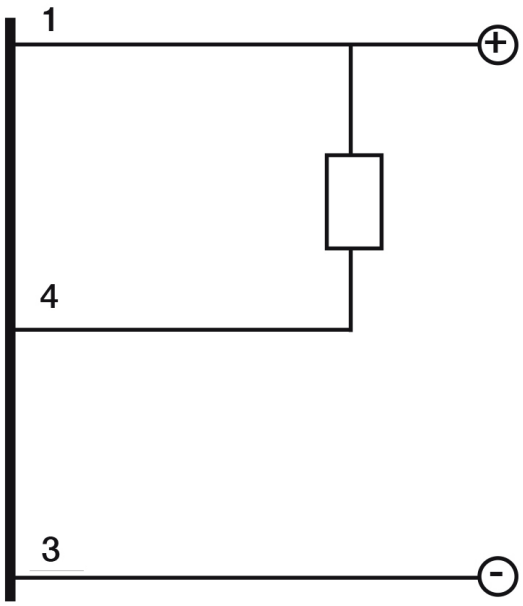

Connector

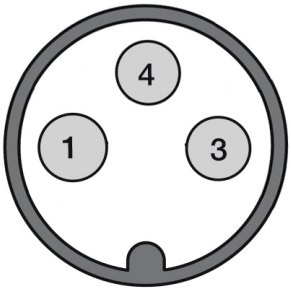

OTHERS

Dimensions

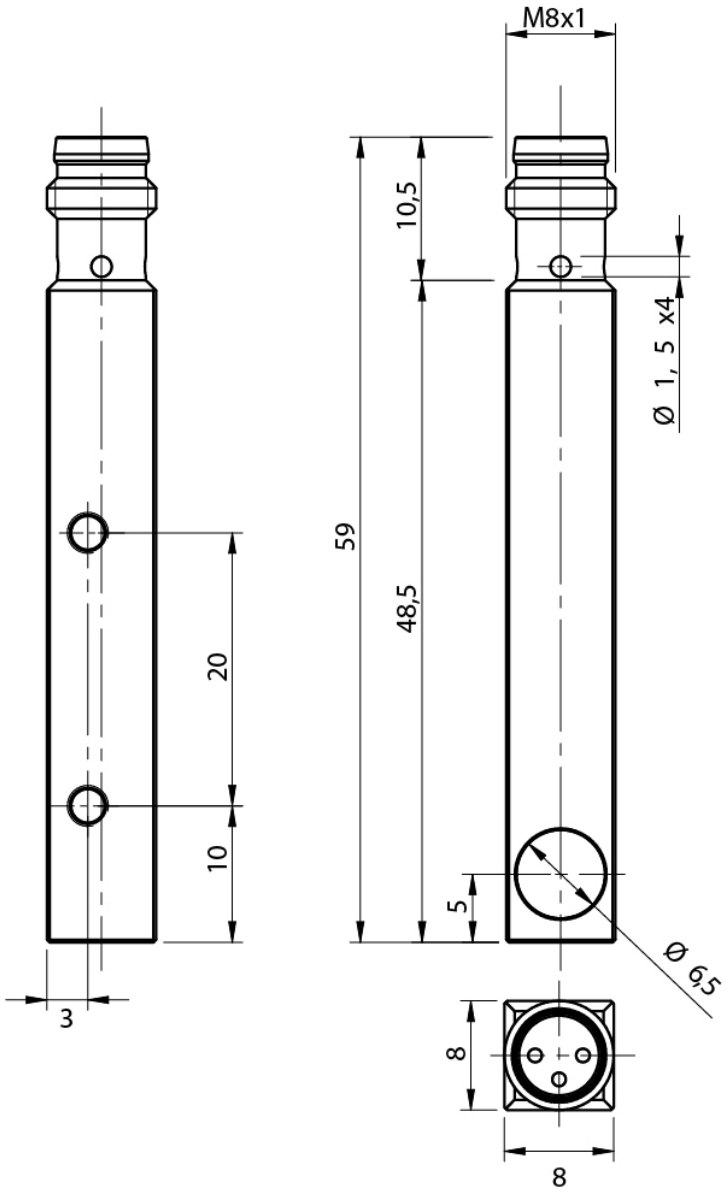

Response curves

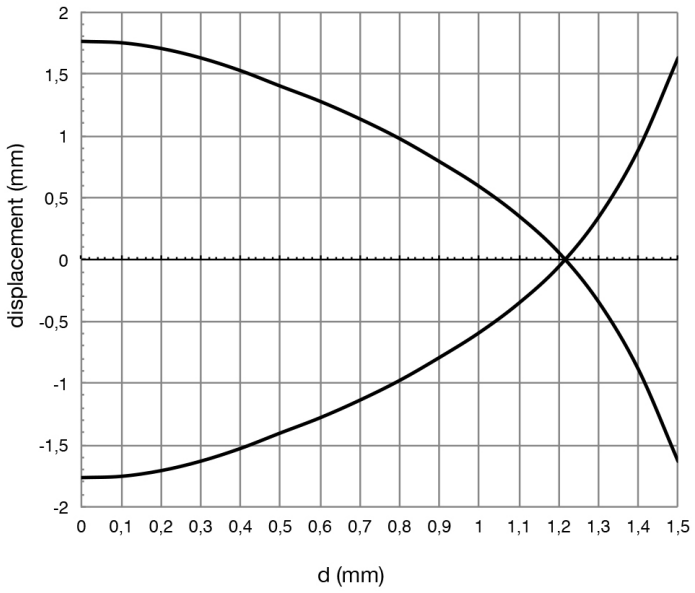

Datasensing S.r.l.
Strada S.Caterina, 235
41122 Modena (MO)
Tel. 059 420411
Fax 059 253973
E-mail
info@datasensing.com

date of printing
24/11/2026
09:49:24