

AES

AES/CP-3A

Ind.M8,PNP-NC,Cable,Sch-LD

M8 CYLINDRICAL MINIATURIZED INDUCTIVE SENSORS

OVERVIEW

- Miniaturized dimensions: M8 x 20 mm (cable) / 30 mm (plug) lenght
- Operating voltage: 10...30 Vcc
- Output current: 100 mA
- LED output indicator
- Totally protected against electrical damages
- Cable and plug M8 output
- Steinless steel housing

TECHNICAL FEATURES

Detection properties

Nominal sensing distance	2mm
Operanting distance	0…1,62mm
Standard target	8x8mm FE360
Correction Factor	copper: 0,15 ± 10% / aluminium: 0,15 ± 10% / brass: 0,21 ± 10% / stainless steel: 0,56 ± 10%

Thermal drift of Sr	< 10%
Repeat Accuracy	< 5% (UB 24V Ta=23°C ±5°C)
Hysteresis	1 … 20%

Application

Description	M8 mini flush mount
Functions	Proximity

Outputs

Output type	PNP
Output Function	NC
Switching frequency	7kHz

Electrical data

Operating Voltage	10...30Vdc
No-Load supply current	≤ 10mA
Load current	≤ 100mA
Leakage current	≤ 10μA
Output voltage drop	≤ 1,5V @100mA
Max ripple content	≤ 10%
LED indicators	Yellow LED output state
Time delay before availability	≤ 50ms

Short-circuit protection	Yes
Reverse Polarity Protection	Yes
Impulsive Overvoltage Protection	Yes
Protection against inductive loads	Yes

Mechanical data

Dimensions	M8 x 1 / L = 20,3mm
Mounting	Shielded
Material	AISI303 Stainless Steel
Housing material	AISI 303 Stainless Steel
Weight	30g
Connections	2m PVC Cable
Active Head Material	PBT
Tightening torque	5Nm
Operating temperature	-25°C…+70°C
Diameter/Dimension	M8

Test/Approvals

Approvals	CE cULus
EMC compatibility	IEC 60947-5-2

Shocks and vibrations	Vibration IEC 60068-2-6 / Shock IEC 60068-2-27
Degree of protection	IP67

Accessories

Supplied Accessories	2 nuts M8x1

Generical Data

Dimensions	M8 x 1 / L = 20,3mm
Operating Temperature	-25°C…+70°C
Mechanical Protection	IP67

CONNECTIONS

Eletrical diagram

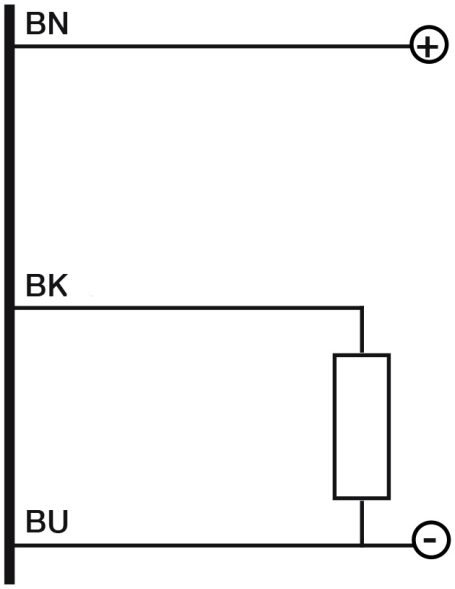

OTHERS

Dimensions

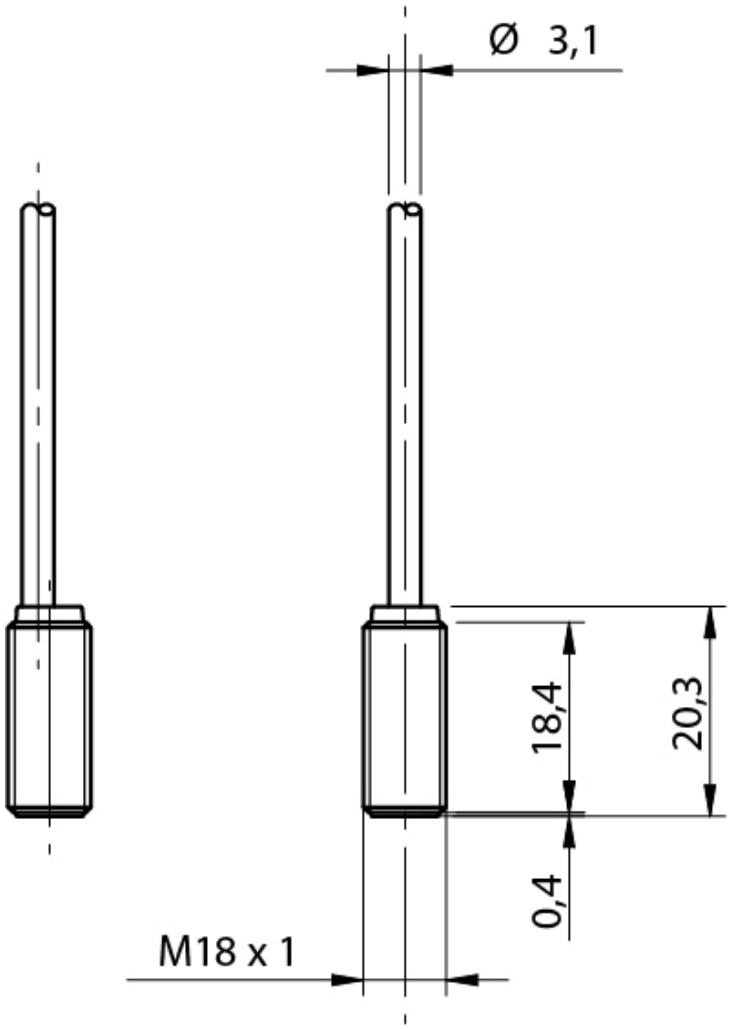

Response curves

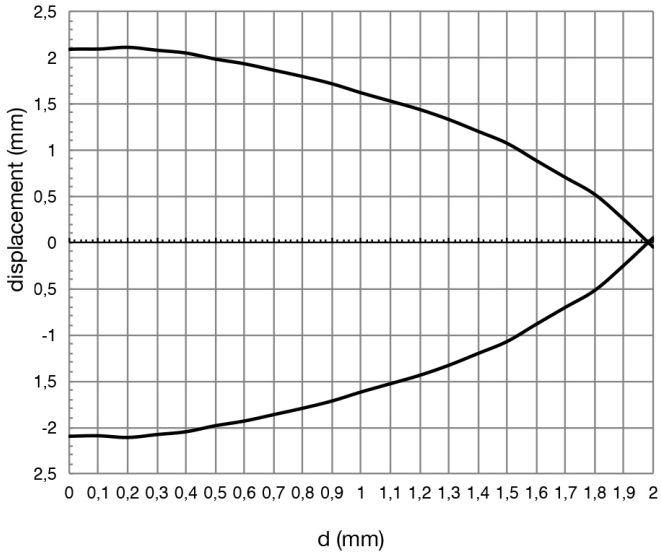

Installation

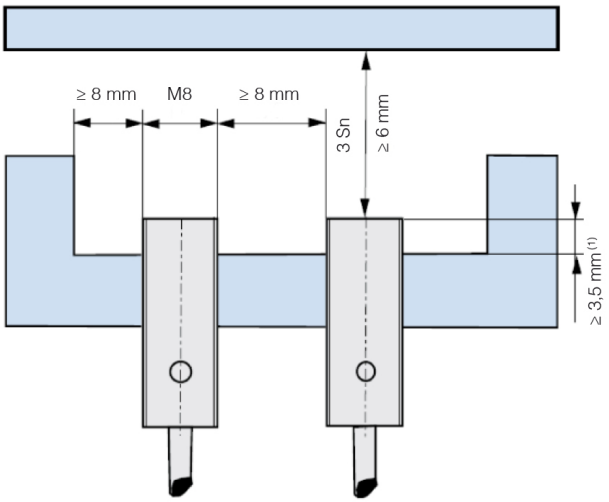

(1) ≥ 4 mm without ferro-magnetic material

Datasensing S.r.l.
Strada S.Caterina, 235
41122 Modena (MO)
Tel. 059 420411
Fax 059 253973
E-mail
info@datasensing.com

date of printing
24/11/2026
09:49:15