

# AES

## AES/AP-3F

**Ind.M8,PNP-NO,M8 plug,Sch-LD**

**M8 CYLINDRICAL MINIATURIZED INDUCTIVE SENSORS**

# OVERVIEW

- Miniaturized dimensions: M8 x 20 mm (cable) / 30 mm (plug) lenght
- Operating voltage: 10...30 Vcc
- Output current: 100 mA
- LED output indicator
- Totally protected against electrical damages
- Cable and plug M8 output
- Steinless steel housing

# TECHNICAL FEATURES

Detection properties

| | |
|---|---|
| Nominal sensing distance | 2mm |
| Operanting distance | 0…1,62mm |
| Standard target | 8x8mm FE360 |
| Correction Factor | copper: 0,15 ± 10% / aluminium: 0,15 ± 10% / brass: 0,21 ± 10% / stainless steel: 0,56 ± 10% |

| | |
|---|---|
| Thermal drift of Sr | < 10% |
| Repeat Accuracy | < 5% (UB 24V Ta=23°C ±5°C) |
| Hysteresis | 1 … 20% |

Application

| | |
|---|---|
| Description | M8 mini flush mount |
| Functions | Proximity |

Outputs

| | |
|---|---|
| Output type | PNP |
| Output Function | NO |
| Switching frequency | 7kHz |

Electrical data

| | |
|---|---|
| Operating Voltage | 10...30Vdc |
| No-Load supply current | ≤ 10mA |
| Load current | ≤ 100mA |
| Leakage current | ≤ 10μA |
| Output voltage drop | ≤ 1,5V @100mA |
| Max ripple content | ≤ 10% |
| LED indicators | Yellow LED output state |
| Time delay before availability | ≤ 50ms |

| | |
|---|---|
| Short-circuit protection | Yes |
| Reverse Polarity Protection | Yes |
| Impulsive Overvoltage Protection | Yes |
| Protection against inductive loads | Yes |

Mechanical data

| | |
|---|---|
| Dimensions | M8 x 1 / L = 29,4mm |
| Mounting | Shielded |
| Material | AISI303 Stainless Steel |
| Housing material | AISI 303 Stainless Steel |
| Weight | 4g |
| Connections | M8 Plug |
| Active Head Material | PBT |
| Tightening torque | 5Nm |
| Operating temperature | -25°C…+70°C |
| Diameter/Dimension | M8 |

Test/Approvals

| | |
|---|---|
| Approvals | CE cULus |
| EMC compatibility | IEC 60947-5-2 |

| | |
|---|---|
| Shocks and vibrations | Vibration IEC 60068-2-6 / Shock IEC 60068-2-27 |
| Degree of protection | IP67 |

Accessories

| | |
|---|---|
| Supplied Accessories | 2 nuts M8x1 |

Generical Data

| | |
|---|---|
| Dimensions | M8 x 1 / L = 29,4mm |
| Operating Temperature | -25°C…+70°C |
| Mechanical Protection | IP67 |

# CONNECTIONS

Eletrical diagram

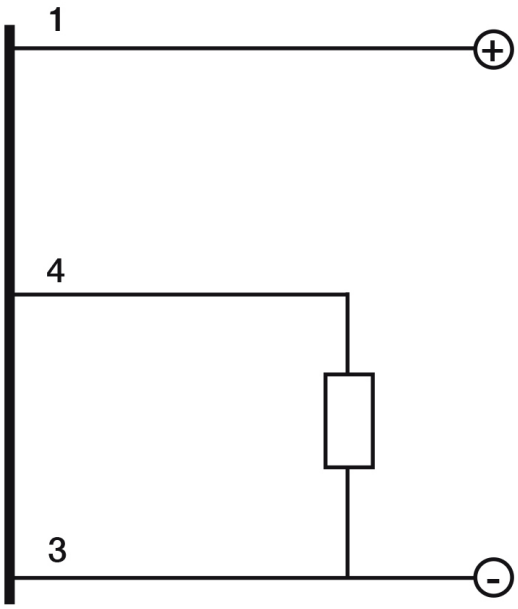


Connector

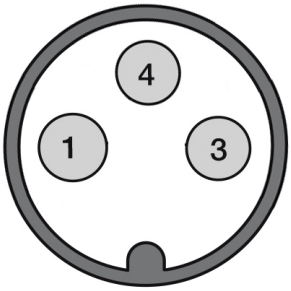


# OTHERS

Dimensions

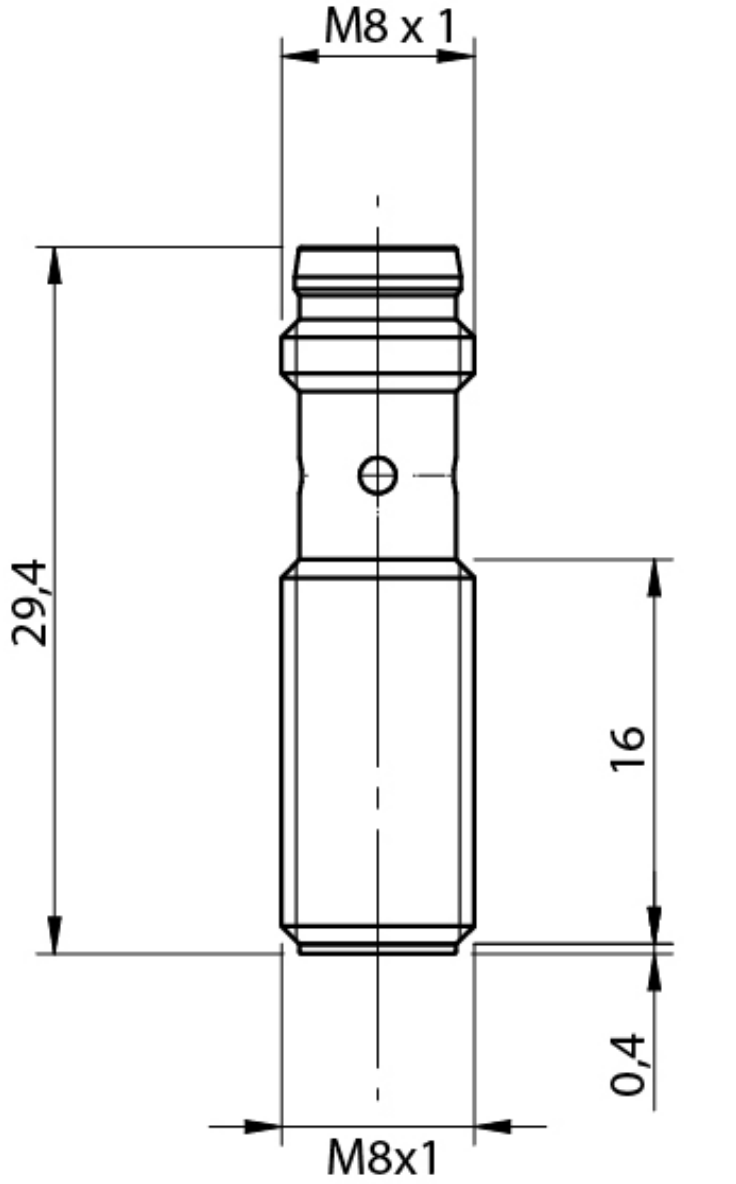


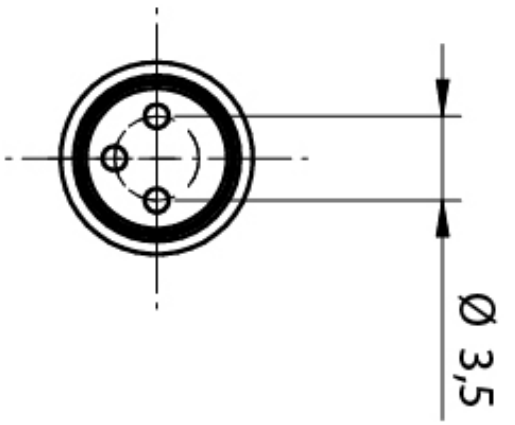


Response curves

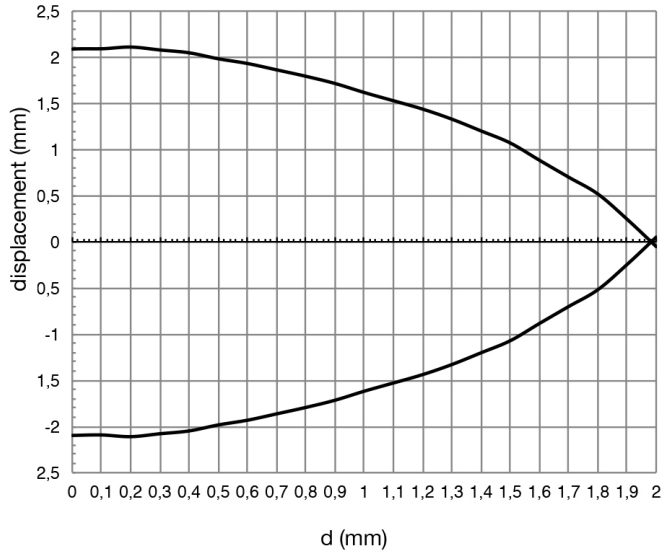


## Installation

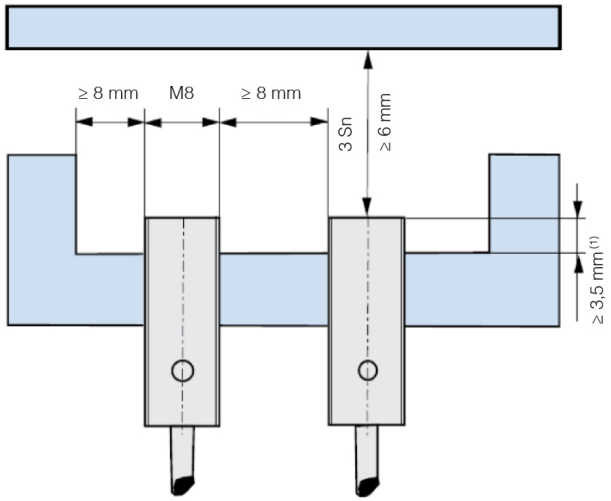


(1) ≥ 4 mm without ferro-magnetic material

**Datasensing S.r.l.**
Strada S.Caterina, 235
41122 Modena (MO)
Tel. 059 420411
Fax 059 253973
E-mail
info@datasensing.com

**date of printing**
24/11/2026
05:33:13