

AH

AH1/CP-3F

Ind.d6,5,PNP-NC,M8 plug,Sch-LD

Ø 6.5 MM CYLINDRICAL INDUCTIVE SENSORS

OVERVIEW

- Extremely reduced dimensions
- Metal housing (stainless steel)
- LED status indicator 360° visible
- IP 67 protection degree
- ATEX models, cat. 3, available on request
- Complete protection against electrical damages
- Standard and long distance models
- Standard and short body housing

TECHNICAL FEATURES

Detection properties

Nominal sensing distance	2mm
Operanting distance	0…1,62mm
Standard target	8x8mm FE360
Correction Factor	copper: 0,10 / aluminium: 0,17 / brass: 0,25 / stainless steel: 0,60

Thermal drift of Sr	< 10%
Repeat Accuracy	< 5% (UB 24V Ta=23°C ±5°C)
Hysteresis	1 … 20%

Application

Description	Ø6,5 standard flush mount
Functions	Proximity

Outputs

Output type	PNP
Output Function	NC
Switching frequency	5kHz

Electrical data

Operating Voltage	10...30Vdc
No-Load supply current	≤ 10mA
Load current	≤ 200mA
Leakage current	≤ 10μA
Output voltage drop	≤ 1,8V @200mA
Max ripple content	≤ 10%
LED indicators	Yellow LED output state
Time delay before availability	≤ 50ms

Short-circuit protection	Yes
Reverse Polarity Protection	Yes
Impulsive Overvoltage Protection	Yes
Protection against inductive loads	Yes

Mechanical data

Dimensions	Ø6,5 / L = 50mm
Mounting	Shielded
Material	AISI303 Stainless Steel
Housing material	AISI303 Stainless Steel
Weight	5g
Connections	M8 Plug
Active Head Material	PBT
Operating temperature	-25°C…+70°C
Diameter/Dimension	Ø6,5

Test/Approvals

Approvals	CE UR
EMC compatibility	IEC 60947-5-2
Shocks and vibrations	Vibration IEC 60068-2-6 / Shock IEC 60068-2-27

Degree of protection	IP67

Generical Data

Dimensions	Ø6,5 / L = 50mm
Operating Temperature	-25°C…+70°C
Mechanical Protection	IP67

CONNECTIONS

Eletrical diagram

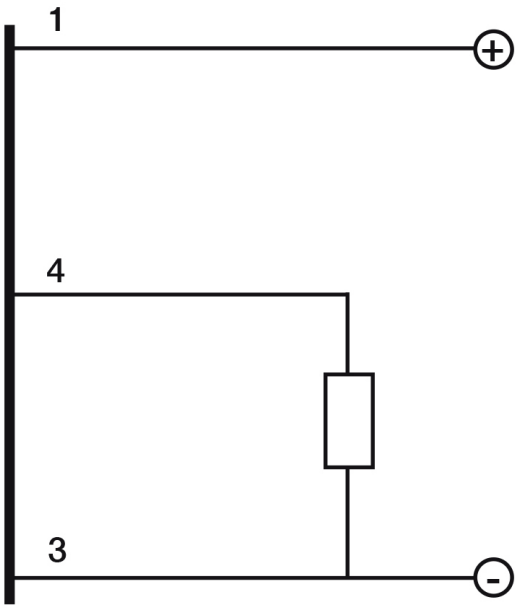

Connector

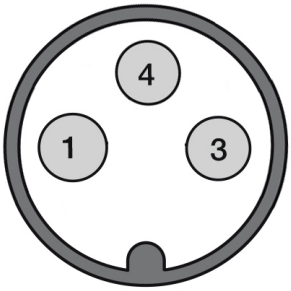

OTHERS

Dimensions

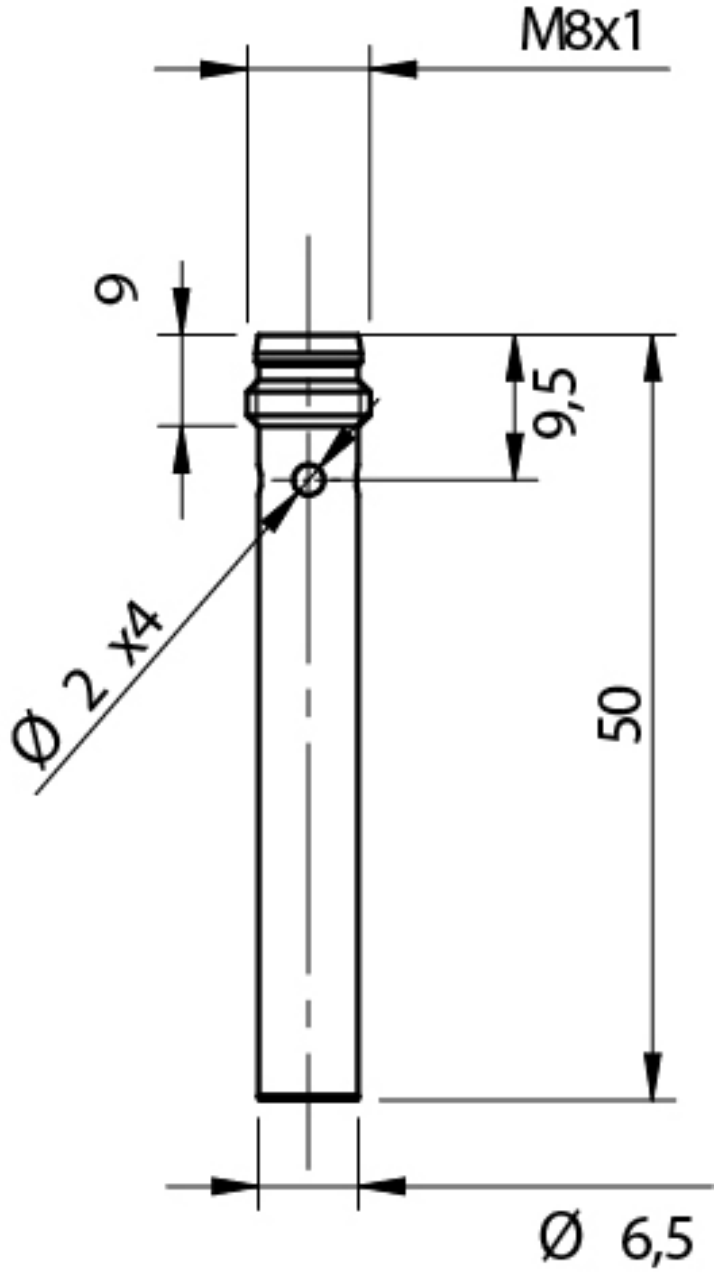



Response curves

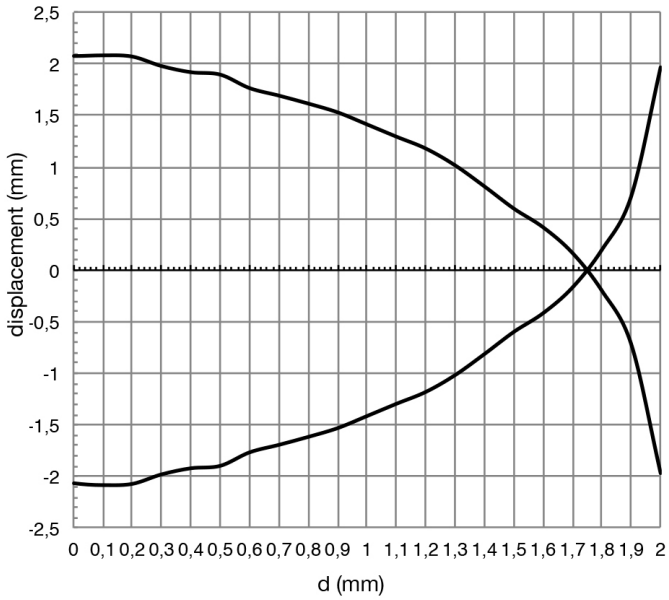

Installation

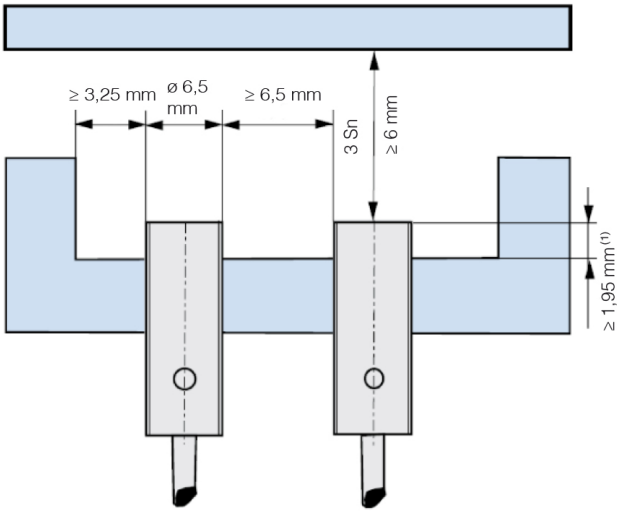

(1) ≥ 2,6 mm for non magnetic materials

Datasensing S.r.l.
Strada S.Caterina, 235
41122 Modena (MO)
Tel. 059 420411
Fax 059 253973
E-mail
info@datasensing.com

date of printing
25/11/2026
06:30:29