

# AE

# AE1/CN-4A

**Ind.M8,NPN-NC,Cable,Nsch-LD**

**M8 CYLINDRICAL INDUCTIVE SENSORS**

## OVERVIEW

- Extremely reduced measure
- Metal housing
- LED status indicator 360° visible
- IP 67 housing protection
- ATEX models, cat. 3, available on request
- Complete protection against electrical damages
- Standard and long distance models
- Standard and short body housing

## TECHNICAL FEATURES

Detection properties

| | |
|---|---|
| Nominal sensing distance | 4mm |
| Operanting distance | 0…3,24mm |
| Standard target | 12x12mm FE360 |
| Correction Factor | copper: 0,47 / aluminium: 0,52 / brass: 0,58 / stainless steel: 0,79 |

| | |
|---|---|
| Thermal drift of Sr | < 10% |
| Repeat Accuracy | < 5% (UB 24V Ta=23°C ±5°C) |
| Hysteresis | 1 … 20% |

Application

| | |
|---|---|
| Description | M8 standard no-flush mount |
| Functions | Proximity |

Outputs

| | |
|---|---|
| Output type | NPN |
| Output Function | NC |
| Switching frequency | 5kHz |

Electrical data

| | |
|---|---|
| Operating Voltage | 10...30Vdc |
| No-Load supply current | ≤ 10mA |
| Load current | ≤ 200mA |
| Leakage current | ≤ 10μA |
| Output voltage drop | ≤ 1,8V @200mA |
| Max ripple content | ≤ 10% |
| LED indicators | Yellow LED output state |
| Time delay before availability | ≤ 50ms |

| | |
|---|---|
| Short-circuit protection | Yes |
| Reverse Polarity Protection | Yes |
| Impulsive Overvoltage Protection | Yes |
| Protection against inductive loads | Yes |

Mechanical data

| | |
|---|---|
| Dimensions | M8 x 1 / L = 45,5mm |
| Mounting | Unshielded |
| Material | Nickel-plated brass |
| Housing material | Nickel-plated brass |
| Weight | 45g |
| Connections | 2m PVC Cable |
| Active Head Material | PBT |
| Tightening torque | 3Nm |
| Operating temperature | -25°C…+70°C |
| Diameter/Dimension | M8 |

Test/Approvals

| | |
|---|---|
| Approvals | CE UR |
| EMC compatibility | IEC 60947-5-2 |

| | |
|---|---|
| Shocks and vibrations | Vibration IEC 60068-2-6 / Shock IEC 60068-2-27 |
| Degree of protection | IP67 |

Accessories

| | |
|---|---|
| Supplied Accessories | 2 nuts M8x1 |

Generical Data

| | |
|---|---|
| Dimensions | M8 x 1 / L = 45,5mm |
| Operating Temperature | -25°C…+70°C |
| Mechanical Protection | IP67 |

# CONNECTIONS

Eletrical diagram

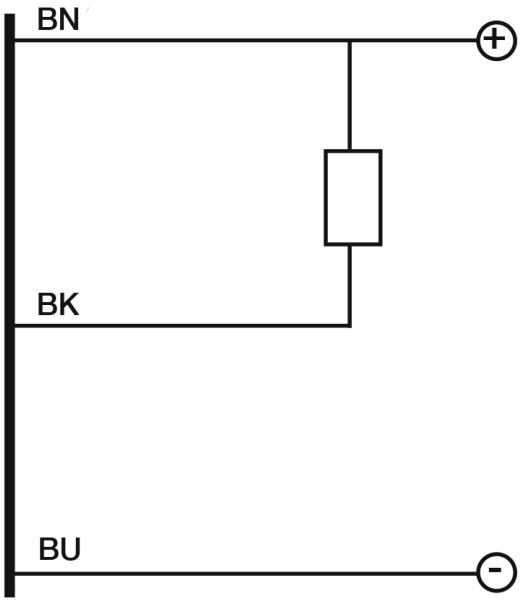

# OTHERS

Dimensions

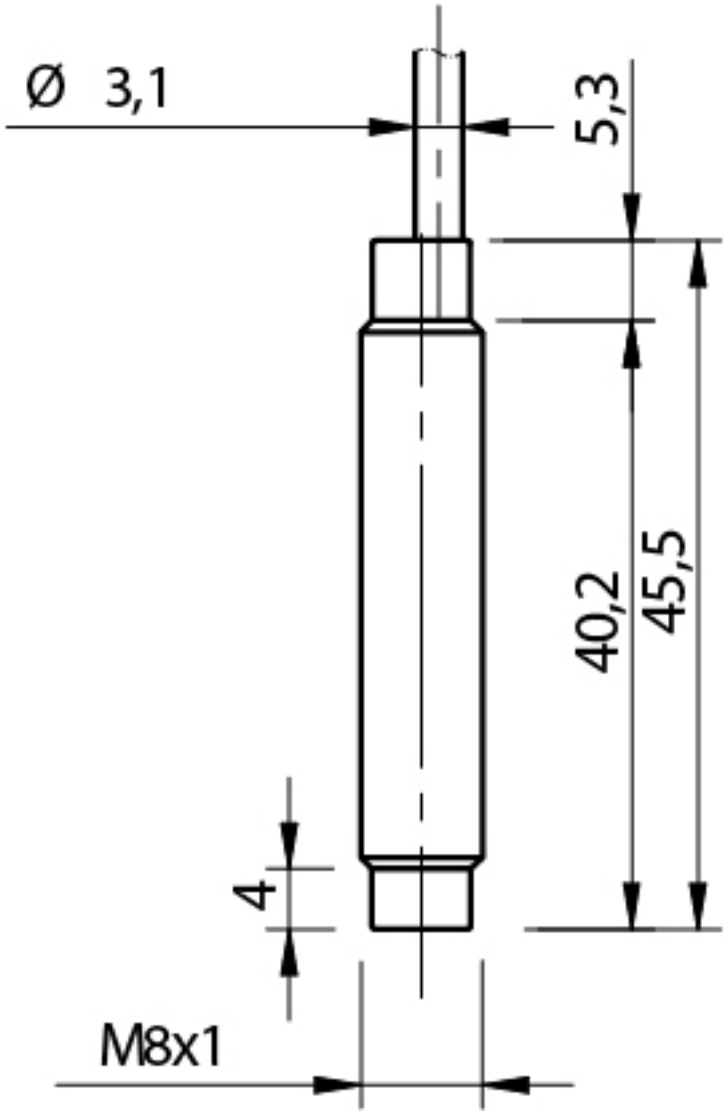


Response curves

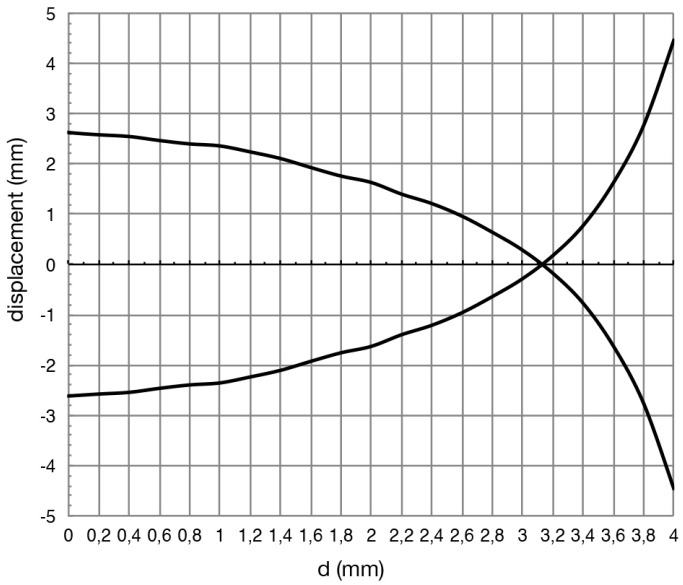


Installation

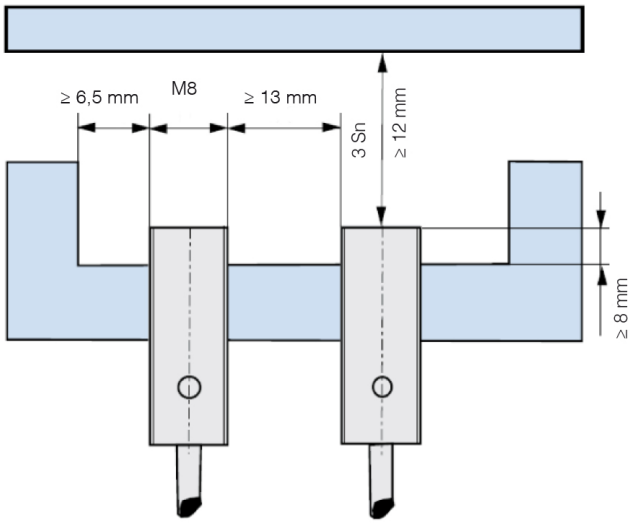


**Datasensing S.r.l.**
Strada S.Caterina, 235
41122 Modena (MO)
Tel. 059 420411
Fax 059 253973
E-mail
info@datasensing.com

**date of printing**
24/11/2026
15:25:43