

AE

AE1/AP-1H

Ind.M8,PNP-NO,M12 plug,Sch-STD

M8 CYLINDRICAL INDUCTIVE SENSORS

OVERVIEW

- Extremely reduced measure
- Metal housing
- LED status indicator 360° visible
- IP 67 housing protection
- ATEX models, cat. 3, available on request
- Complete protection against electrical damages
- Standard and long distance models
- Standard and short body housing

TECHNICAL FEATURES

Detection properties

Nominal sensing distance	1,5mm
Operanting distance	0…1,21mm
Standard target	8x8mm FE360
Correction Factor	copper: 0,29 / aluminium: 0,38 / brass: 0,49 / stainless steel: 0,78

Thermal drift of Sr	< 10%
Repeat Accuracy	< 5% (UB 24V Ta=23°C ±5°C)
Hysteresis	1 … 20%

Application

Description	M8 standard flush mount
Functions	Proximity

Outputs

Output type	PNP
Output Function	NO
Switching frequency	5kHz

Electrical data

Operating Voltage	10...30Vdc
No-Load supply current	≤ 10mA
Load current	≤ 200mA
Leakage current	≤ 10μA
Output voltage drop	≤ 1,8V @200mA
Max ripple content	≤ 10%
LED indicators	Yellow LED output state
Time delay before availability	≤ 50ms

Short-circuit protection	Yes
Reverse Polarity Protection	Yes
Impulsive Overvoltage Protection	Yes
Protection against inductive loads	Yes

Mechanical data

Dimensions	M8 x 1 / L = 60mm
Mounting	Shielded
Material	Nickel-plated brass
Housing material	Nickel-plated brass
Weight	20g
Connections	M12 Plug
Active Head Material	PBT
Tightening torque	3Nm
Operating temperature	-25°C…+70°C
Diameter/Dimension	M8

Test/Approvals

Approvals	CE UR
EMC compatibility	IEC 60947-5-2

Shocks and vibrations	Vibration IEC 60068-2-6 / Shock IEC 60068-2-27
Degree of protection	IP67

Accessories

Supplied Accessories	2 nuts M8x1

Generical Data

Dimensions	M8 x 1 / L = 60mm
Operating Temperature	-25°C…+70°C
Mechanical Protection	IP67

CONNECTIONS

Eletrical diagram

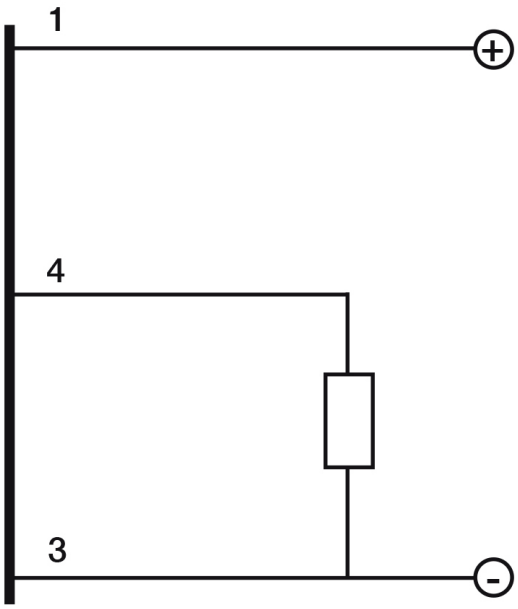

Connector

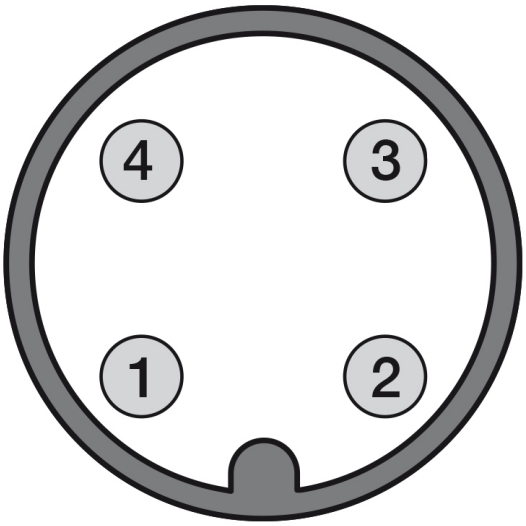

OTHERS

Dimensions

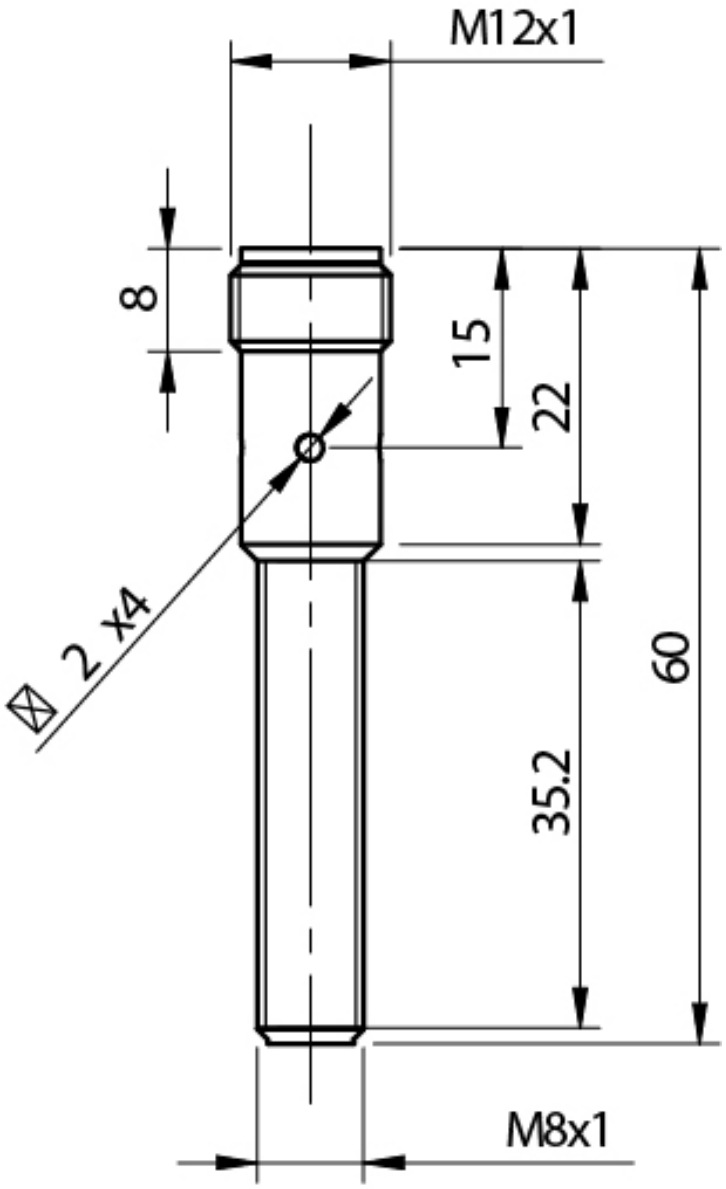

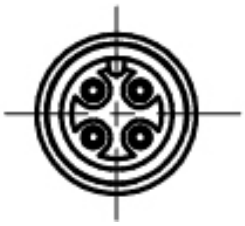

Response curves

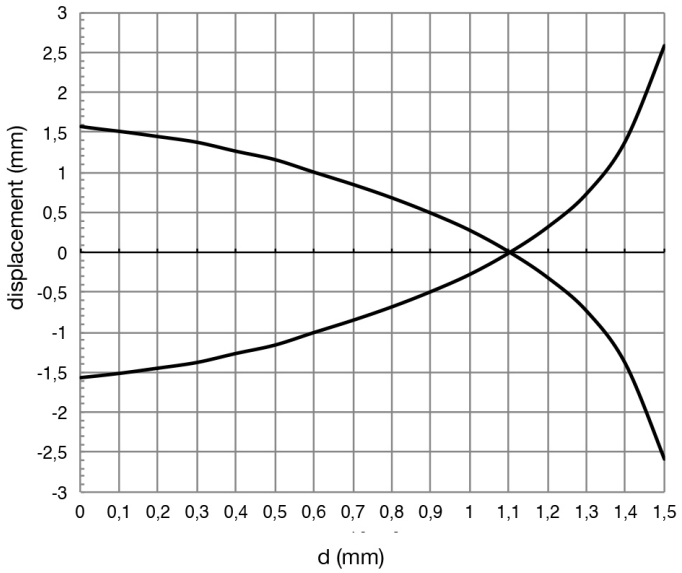

Installation

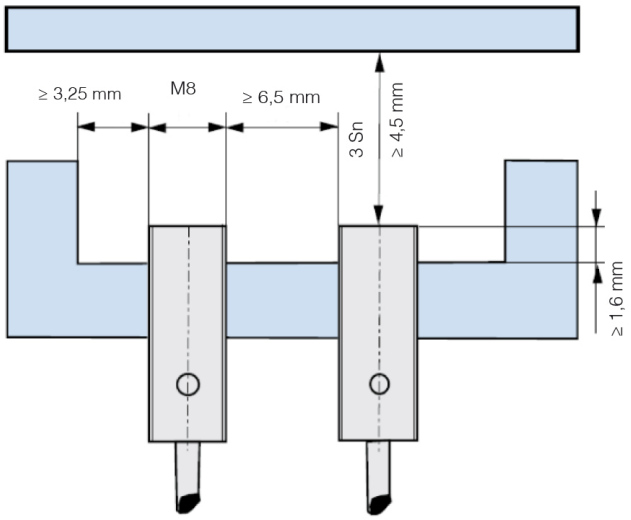

Datasensing S.r.l.
Strada S.Caterina, 235
41122 Modena (MO)
Tel. 059 420411
Fax 059 253973
E-mail
info@datasensing.com

date of printing
24/11/2026
05:32:05