

Analogue

AM1/D2-5H

Ind.M12,0-10V+4-20mA,M12 Plug,Sch-LD

OVERVIEW

CE

TECHNICAL FEATURES

Detection properties

Nominal sensing distance	0…6mm
Operanting distance	0…6mm
Standard target	18x18mm FE360
Thermal drift of Sr	±5% (0…+70°C); ±10% (-25°C…0°C)
Repeat Accuracy	0,3mm (UB 20...30Vcc/Vdc Ta=23°C ±5°C)
Resolution	≤1µm

Application

Description	M12 standard no-flush mount
Functions	Proximity

Outputs

Output type	Analogue
Output Function	Analogue
Voltage Analogue Output	1 x 0...10V
Current Analogue Output	1 x 4...20mA

Electrical data

Operating Voltage	19.2...28.8 Vdc
No-Load supply current	≤ 12mA
Load current	≤ 10mA
Max ripple content	≤ 20%
Time delay before availability	≤ 50ms
Short-circuit protection	Yes
Reverse Polarity Protection	Yes
Max output current	4mA ± 0,≤ 8mA (23°C) 20mA ± 0,≤ 8mA (23°C)
Impulsive Overvoltage Protection	Yes
Maximum capacitance load	500Ω (UB = 15V) / 1kΩ (UB = 30V)
Output voltage	0V - 0 + 0,4V (23°C) +5,2V ± 0,4V (23°C) +10V ± 0,4V (23°C)

Mechanical data

Dimensions	M12 x 1 / L = 60mm
Mounting	Partially Shielded
Material	Nickel-plated brass
Housing material	Nickel-plated brass
Weight	33g
Connections	M12 Plug
Active Head Material	PBT
Tightening torque	10Nm
Operating temperature	-25°C…+70°C
Diameter/Dimension	M12

Test/Approvals

Approvals	CE
EMC compatibility	IEC 60947-5-2
Shocks and vibrations	Vibration IEC 60068-2-6 / Shock IEC 60068-2-27
Degree of protection	IP67

Accessories

Supplied Accessories	2 nuts M12x1

Generical Data

Dimensions	M12 x 1 / L = 60mm
Operating Temperature	-25°C…+70°C
Mechanical Protection	IP67

CONNECTIONS

Eletrical diagram

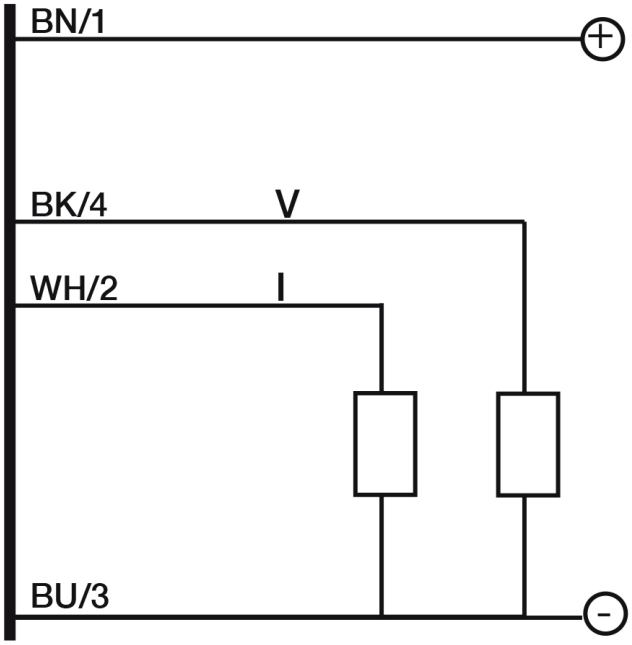

Connector

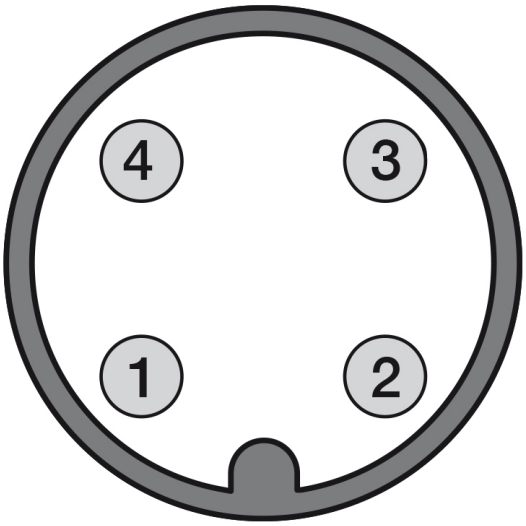

OTHERS

Dimensions

Image:

Installation

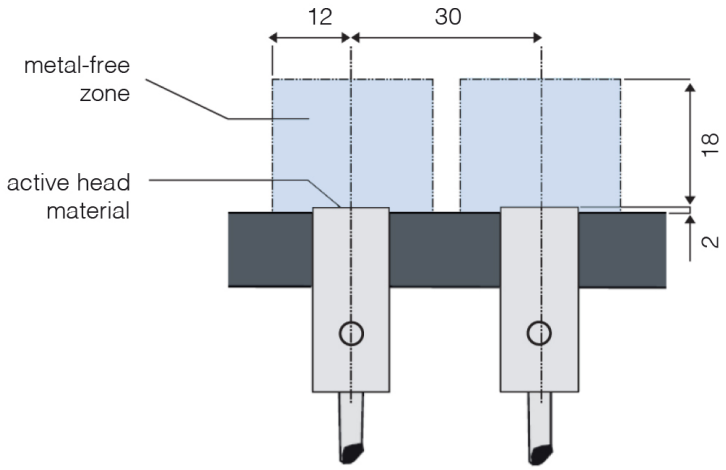

Datasensing S.r.l.
Strada S.Caterina, 235
41122 Modena (MO)
Tel. 059 420411
Fax 059 253973
E-mail
info@datasensing.com

date of printing
24/11/2026
05:01:28