

# VT

# VT2/A0-2B

**Ind.M30,2 wires AC-NO,Cable,Nsch-STD**

**CYLINDRICAL M30 IN AC INDUCTIVE SENSORS**

# OVERVIEW

- Output: cable and M12 plug cable exit
- Models with 2 wires
- IP 67 protection degree
- Multivoltage 20 ...253 Vac

# TECHNICAL FEATURES

Detection properties

| | |
|---|---|
| Nominal sensing distance | 15mm |
| Operanting distance | 0…12,1mm |
| Standard target | 45x45mm FE360 |
| Correction Factor | copper: 0,45/ aluminium: 0,50 / brass: 0,60 / stainless steel: 0,80 |
| Thermal drift of Sr | < 10% |
| Repeat Accuracy | < 5% (UB 24V Ta=23°C ±5°C) |

| | |
|---|---|
| Hysteresis | 1 … 20% |

Application

| | |
|---|---|
| Description | M30 standard no-flush mount |
| Functions | Proximity |

Outputs

| | |
|---|---|
| Output type | TRIAC |
| Output Function | NO |
| Switching frequency | 25Hz |

Electrical data

| | |
|---|---|
| Operating Voltage | 20...250Vac/50...60Hz |
| Load current | 5...300mA |
| Leakage current | ≤ 1mA RMS max |
| Output voltage drop | See curves |
| Max ripple content | ≤ 10% |
| LED indicators | Yellow LED output state |
| Time delay before availability | ≤ 200ms |
| Inrush current | 7A (Ton = 10ms) |

Mechanical data

| | |
|---|---|
| Dimensions | M30 x 1,5 / L = 80mm |
| Mounting | Unshielded |
| Material | Nickel-plated brass |
| Housing material | Nickel-plated brass |
| Weight | 100g |
| Connections | 2m PVC cable with tang |
| Active Head Material | PBT |
| Tightening torque | 50Nm |
| Operating temperature | -25°C…+70°C |
| Diameter/Dimension | M30 |

Test/Approvals

| | |
|---|---|
| Approvals | CE UR |
| EMC compatibility | IEC 60947-5-2 |
| Shocks and vibrations | Vibration IEC 60068-2-6 / Shock IEC 60068-2-27 |
| Degree of protection | IP67 |

Accessories

| | |
|---|---|
| Supplied Accessories | 2 nuts M30x1.5 |

Generical Data

| | |
|---|---|
| Dimensions | M30 x 1,5 / L = 80mm |

| | |
|---|---|
| Operating Temperature | -25°C…+70°C |
| Mechanical Protection | IP67 |

# CONNECTIONS

Eletrical diagram

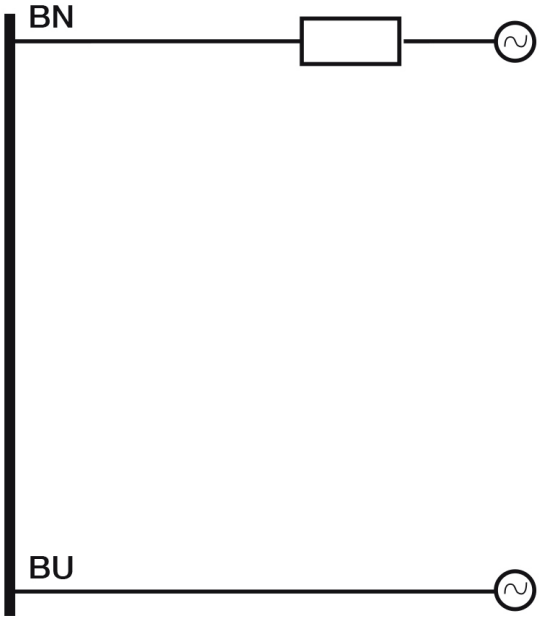


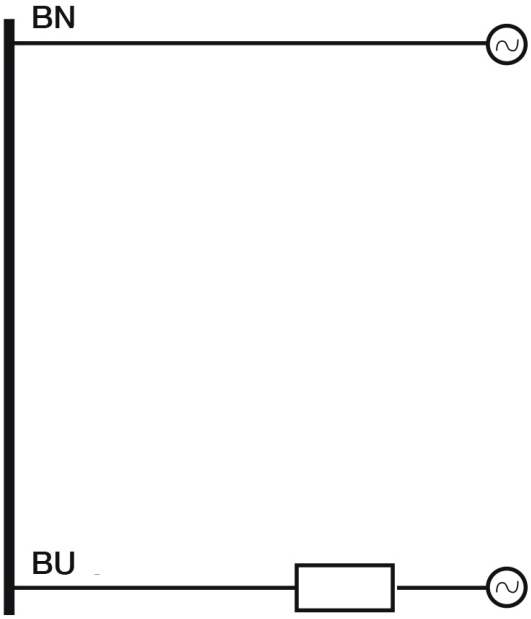


# OTHERS

Dimensions

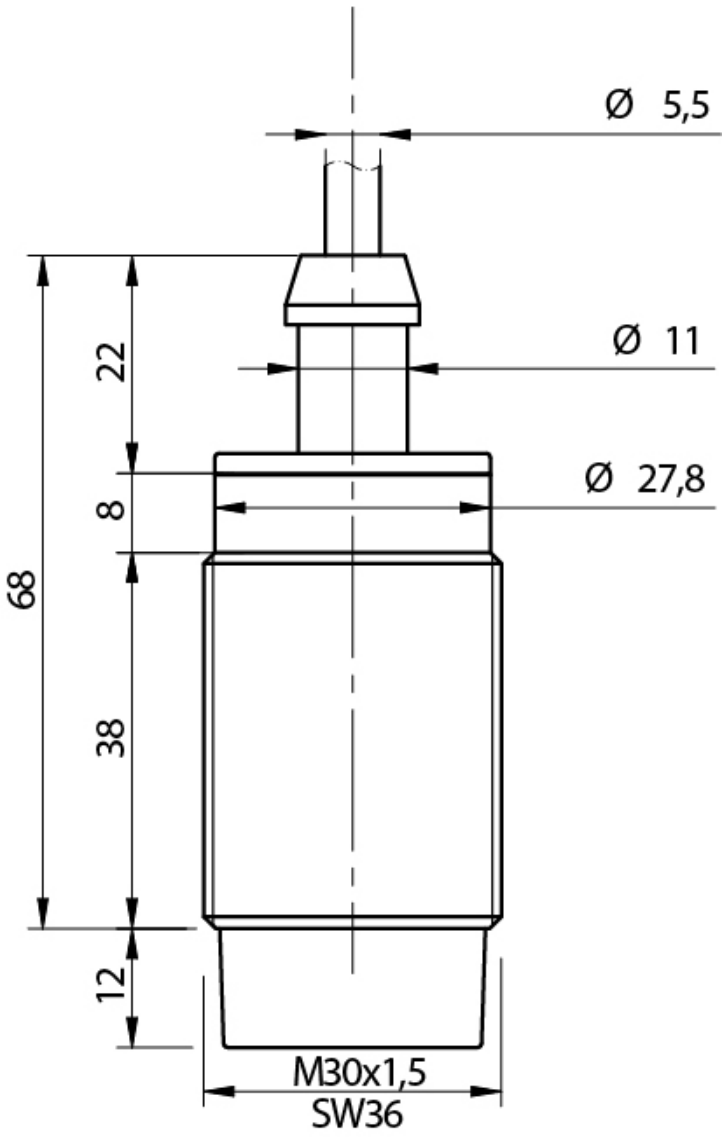


Response curves

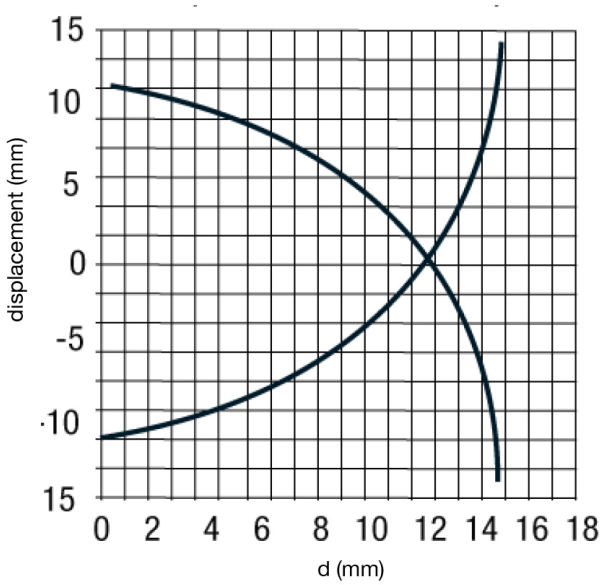


Installation

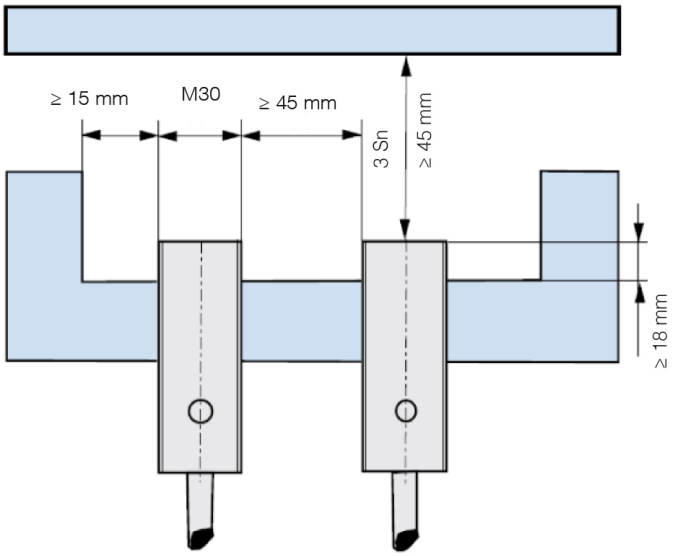


**Datasensing S.r.l.**
Strada S.Caterina, 235
41122 Modena (MO)
Tel. 059 420411
Fax 059 253973
E-mail
info@datasensing.com

**date of printing**
24/11/2026
05:24:06