

PMS-PKS/PMW-PKW

PKW/0P-2H

Ind.M18,PNP-NO+NC,M12 Plug,Nsch-STD

M12 & M18 IP67/68 CYLINDRICAL FOR HARSH ENVIRONMENTS - DC

OVERVIEW

- Innovative housing (double enclosure)
- Cutting oils resistant (for machines tool)
- Immersion proof (sealing IP 67/68)
- High frequency switching
- Complementary output (NO+NC), M12 plug cable exit
- ATEX models, cat. 3, available on request
- LED indicator visible at wide angle
- Complete protection against electrical damages

CE

TECHNICAL FEATURES

Detection properties

Nominal sensing distance	8mm
Operanting distance	0…6,48mm
Standard target	24x24mm FE360
Correction Factor	copper: 0,30 / aluminium: 0,37 / brass: 0,46 / stainless steel: 0,78

Thermal drift of Sr	< 10%
Repeat Accuracy	< 5% (UB 24V Ta=23°C ±5°C)
Hysteresis	1 … 20%

Application

Description	M18 standard no-flush mount
Functions	Proximity

Outputs

Output type	PNP
Output Function	NO + NC
Switching frequency	1,5kHz

Electrical data

Operating Voltage	10...30Vdc
No-Load supply current	≤ 15mA
Load current	≤ 400mA
Leakage current	≤ 10µA
Output voltage drop	≤ 2V @200mA
Max ripple content	≤ 10%
LED indicators	Yellow LED output state
Time delay before availability	≤ 50ms

Short-circuit protection	Yes
Reverse Polarity Protection	Yes
Impulsive Overvoltage Protection	Yes

Mechanical data

Dimensions	M18 x 1 / L =63mm
Mounting	Unshielded
Material	AISI303 Stainless Steel
Housing material	AISI303 Stainless Steel
Weight	55g
Connections	M12 Plug
Active Head Material	PSU
Tightening torque	50Nm
Operating temperature	-25°C…+70°C
Diameter/Dimension	M18

Test/Approvals

Approvals	CE
EMC compatibility	IEC 60947-5-2
Shocks and vibrations	Vibration IEC 60068-2-6 / Shock IEC 60068-2-27

Degree of protection	IP67, IP68

Accessories

Supplied Accessories	2 nuts M18x1

Generical Data

Dimensions	M18 x 1 / L =63mm
Operating Temperature	-25°C…+70°C
Mechanical Protection	IP67

CONNECTIONS

Eletrical diagram

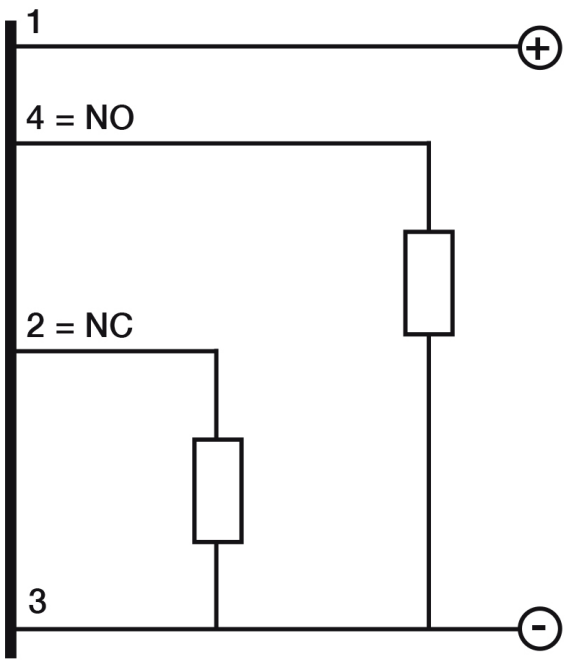

Connector

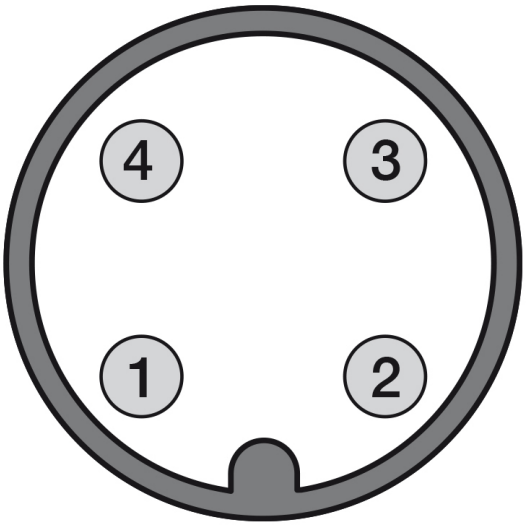

OTHERS

Dimensions

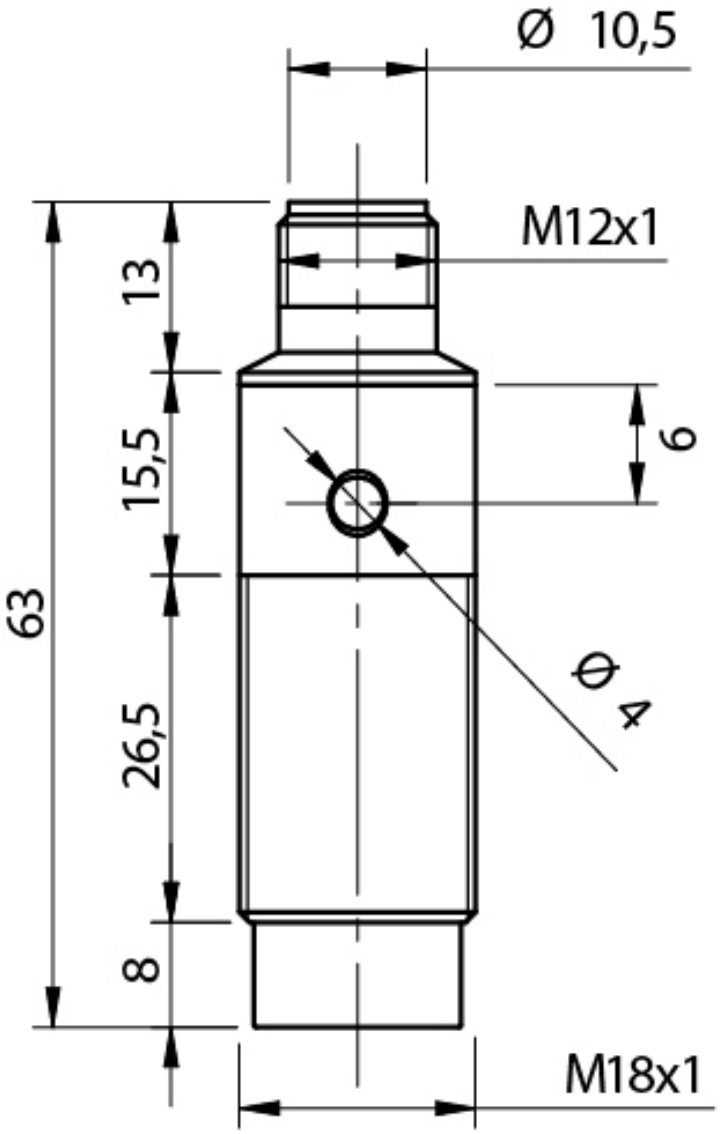

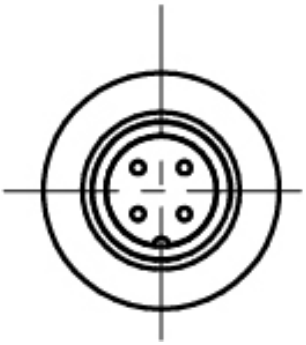

Response curves

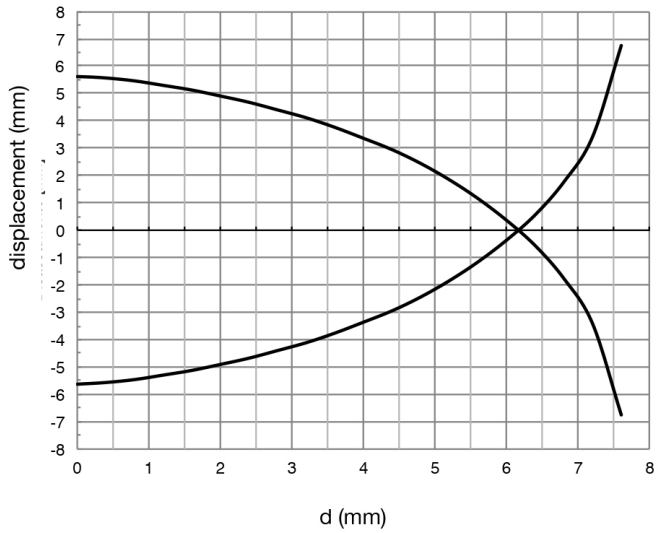

Installation

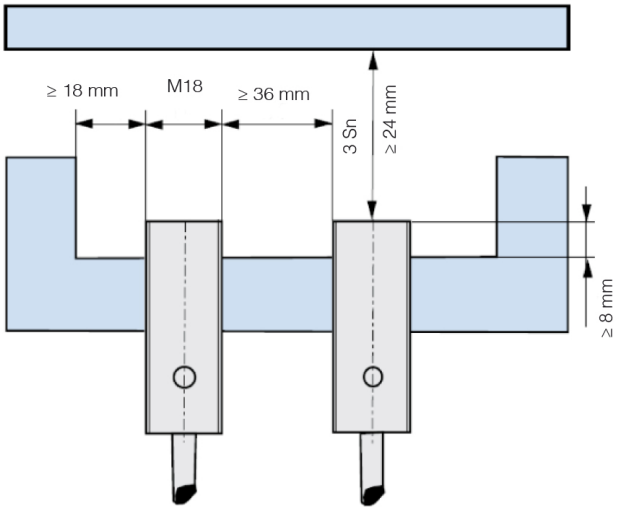

Datasensing S.r.l.
Strada S.Caterina, 235
41122 Modena (MO)
Tel. 059 420411
Fax 059 253973
E-mail
info@datasensing.com

date of printing
25/11/2026
06:30:32