


# PK3

## PK3/00-1H

**Ind.M18,NPN/PNP-NO/NC,M12 plug,Sch-STD**

**M18 DECOUT® CYLINDRICAL INDUCTIVE SENSORS**

# OVERVIEW

- Wide range of models: standard, long distance, DECOUT® output
- Output: cable, M12 and plug cable exit
- Models with 4 wires
- ATEX models, cat. 3, available on request
- Special models with double enclosure immersion proof (IP 68)
- Models with complementary output (NO+NC)

CE

# TECHNICAL FEATURES

Detection properties

| | |
|---|---|
| Nominal sensing distance | 5mm |
| Operanting distance | 0…4,05mm |
| Standard target | 18x18mm FE360 |
| Correction Factor | copper: 0,40 / aluminium: 0,48 / brass: 0,72 / stainless steel: 0,86 |
| Thermal drift of Sr | < 10% |

| | |
|---|---|
| Repeat Accuracy | < 5% (UB 24V Ta=23°C ±5°C) |
| Hysteresis | 1 … 20% |

Application

| | |
|---|---|
| Description | M18 standard flush mount |
| Functions | Proximity |

Outputs

| | |
|---|---|
| Output type | NPN/PNP |
| Output Function | NO/NC |
| Switching frequency | 300Hz |

Electrical data

| | |
|---|---|
| Operating Voltage | 10...30Vdc |
| No-Load supply current | ≤ 30mA |
| Load current | ≤ 100mA |
| Leakage current | ≤ 10μA |
| Output voltage drop | ≤ 1,2V @100mA |
| Max ripple content | ≤ 10% |
| LED indicators | Yellow LED output state |
| Time delay before availability | ≤100ms |
| Short-circuit protection | Yes |

| | |
|---|---|
| Reverse Polarity Protection | Yes |
| Impulsive Overvoltage Protection | Yes |
| Protection against inductive loads | Yes |

Mechanical data

| | |
|---|---|
| Dimensions | M18 x 1 / L = 72mm |
| Mounting | Shielded |
| Material | Nickel-plated brass |
| Housing material | Nickel-plated brass |
| Weight | 58g |
| Connections | M12 Plug |
| Active Head Material | PBT |
| Tightening torque | 25Nm |
| Operating temperature | -25°C…+70°C |
| Diameter/Dimension | M18 |

Test/Approvals

| | |
|---|---|
| Approvals | CE |
| EMC compatibility | IEC 60947-5-2 |
| Shocks and vibrations | Vibration IEC 60068-2-6 / Shock IEC 60068-2-27 |

| | |
|---|---|
| Degree of protection | IP67 |

Accessories

| | |
|---|---|
| Supplied Accessories | 2 nuts M18x1 |

Generical Data

| | |
|---|---|
| Dimensions | M18 x 1 / L = 72mm |
| Operating Temperature | -25°C…+70°C |
| Mechanical Protection | IP67 |

# CONNECTIONS

Eletrical diagram

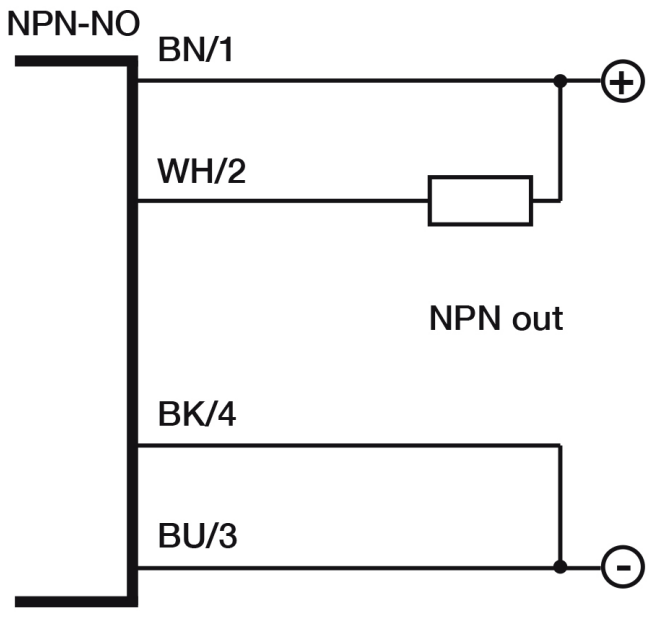

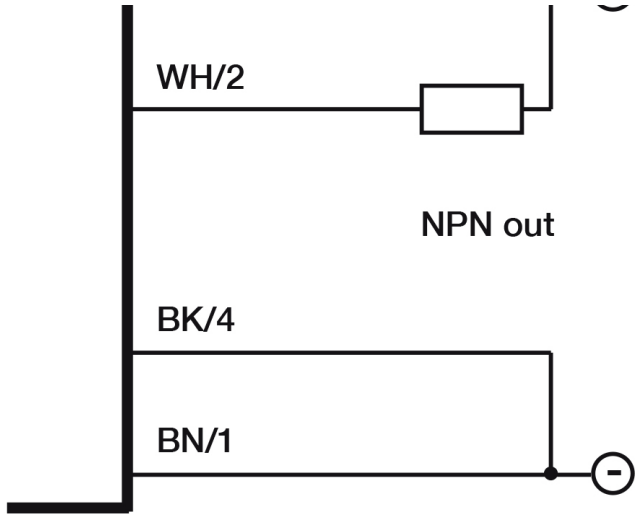
WH/2
NPN out
BK/4
BN/1

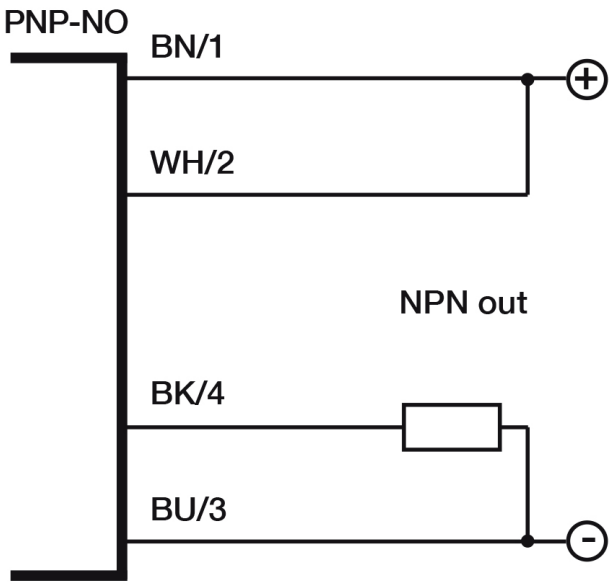
PNP-NO
BN/1
WH/2
NPN out
BK/4
BU/3

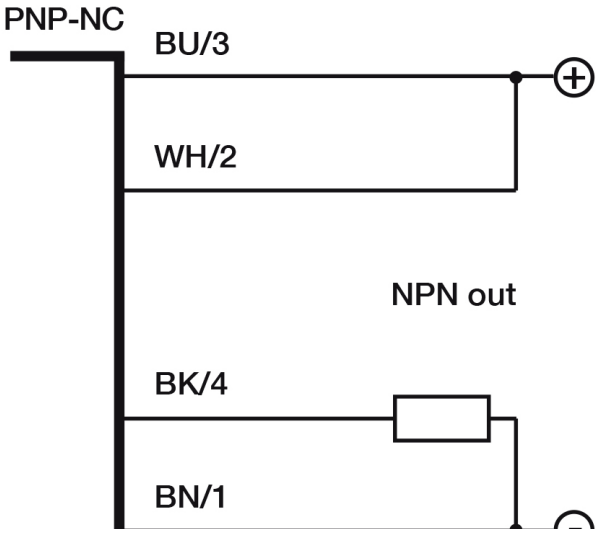
PNP-NC
BU/3
WH/2
NPN out
BK/4
BN/1



Connector

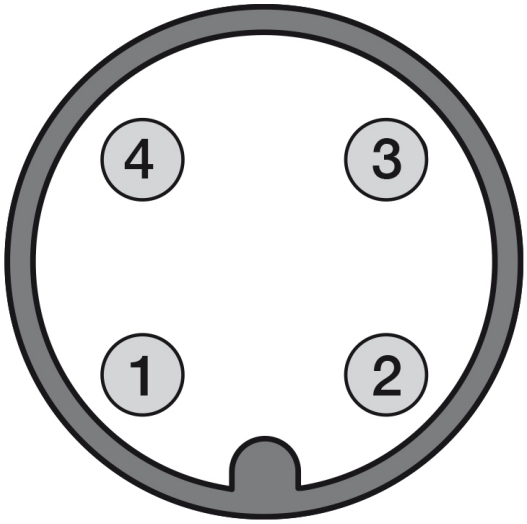


# OTHERS

Dimensions

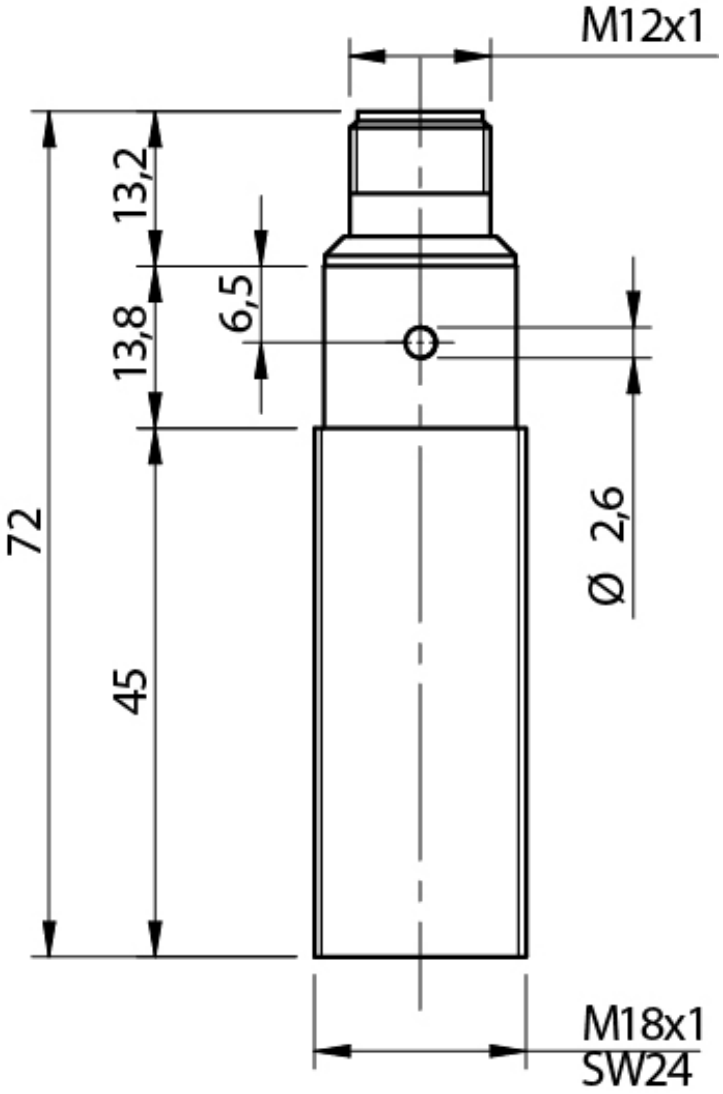


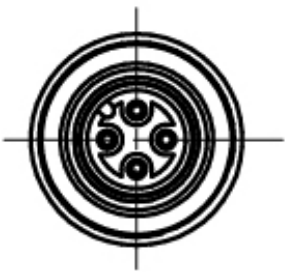

Response curves

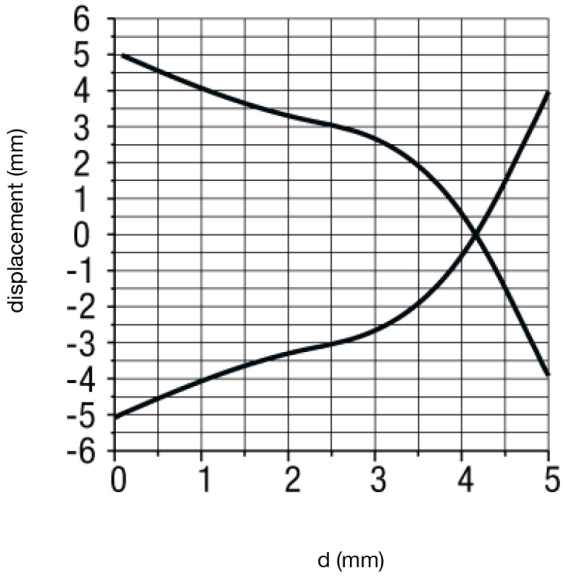


Installation

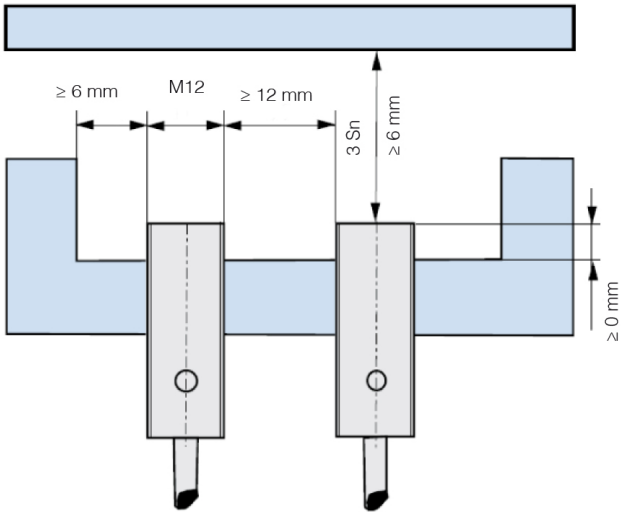


**Datasensing S.r.l.**
Strada S.Caterina, 235
41122 Modena (MO)
Tel. 059 420411
Fax 059 253973
E-mail
info@datasensing.com

**date of printing**
24/11/2026
06:36:32