

AC1

AC1/CN-1F

Ind.d4,NPN-NC,M8 plug,Sch-STD

Ø 4 MM CYLINDRICAL MINIATURIZED INDUCTIVE SENSORS

OVERVIEW

- Smooth stainless steel housing
- Ø4 mm diameter
- Yellow output LED 360° visible
- Availabe 2 m PVC cable models or M8 connector models
- IP 67 protection degree

TECHNICAL FEATURES

Detection properties

Nominal sensing distance	0,8mm
Operanting distance	0…0,65mm
Standard target	4x4mm FE360
Correction Factor	copper: 0,28 ± 10% / aluminium: 0,21 ± 10% / brass: 0,32 ± 10% / stainless steel: 0,63 ± 10%
Thermal drift of Sr	< 10%

Repeat Accuracy	< 5% (UB 24V Ta=23°C ±5°C)
Hysteresis	1 … 20%

Application

Description	Ø4 standard flush mount
Functions	Proximity

Outputs

Output type	NPN
Output Function	NC
Switching frequency	5kHz

Electrical data

Operating Voltage	10...30Vdc
No-Load supply current	≤ 10mA
Load current	≤ 100mA
Leakage current	≤ 10µA
Output voltage drop	≤ 1,5V @100mA
Max ripple content	≤ 10%
LED indicators	Yellow LED output state
Time delay before availability	≤ 50ms

Short-circuit protection	Yes
Reverse Polarity Protection	Yes
Impulsive Overvoltage Protection	Yes
Protection against inductive loads	Yes

Mechanical data

Dimensions	Ø4 / L = 38,4mm
Mounting	Shielded
Material	AISI303 Stainless Steel
Housing material	AISI303 Stainless Steel
Weight	4g
Connections	M8 Plug
Active Head Material	PBT
Operating temperature	-25°C…+70°C
Diameter/Dimension	Ø4

Test/Approvals

Approvals	CE cULus
EMC compatibility	IEC 60947-5-2
Shocks and vibrations	Vibration IEC 60068-2-6 / Shock IEC 60068-2-27
Degree of protection	IP67

Generical Data

Dimensions	Ø4 / L = 38,4mm
Operating Temperature	-25°C…+70°C
Mechanical Protection	IP67

CONNECTIONS

Eletrical diagram

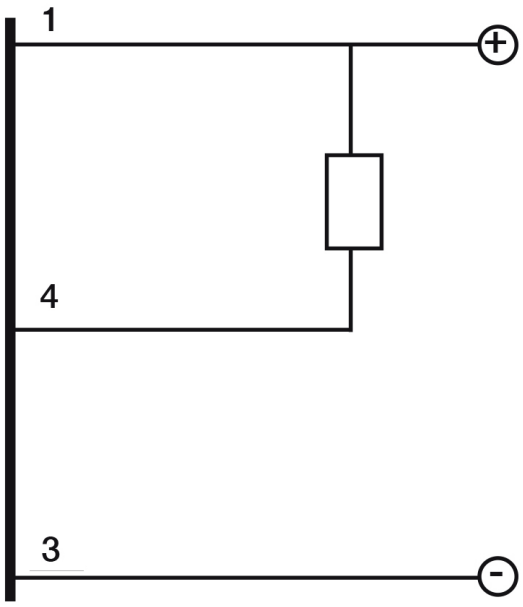

Connector

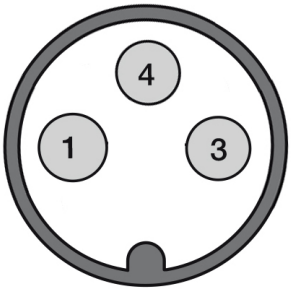

OTHERS

Dimensions

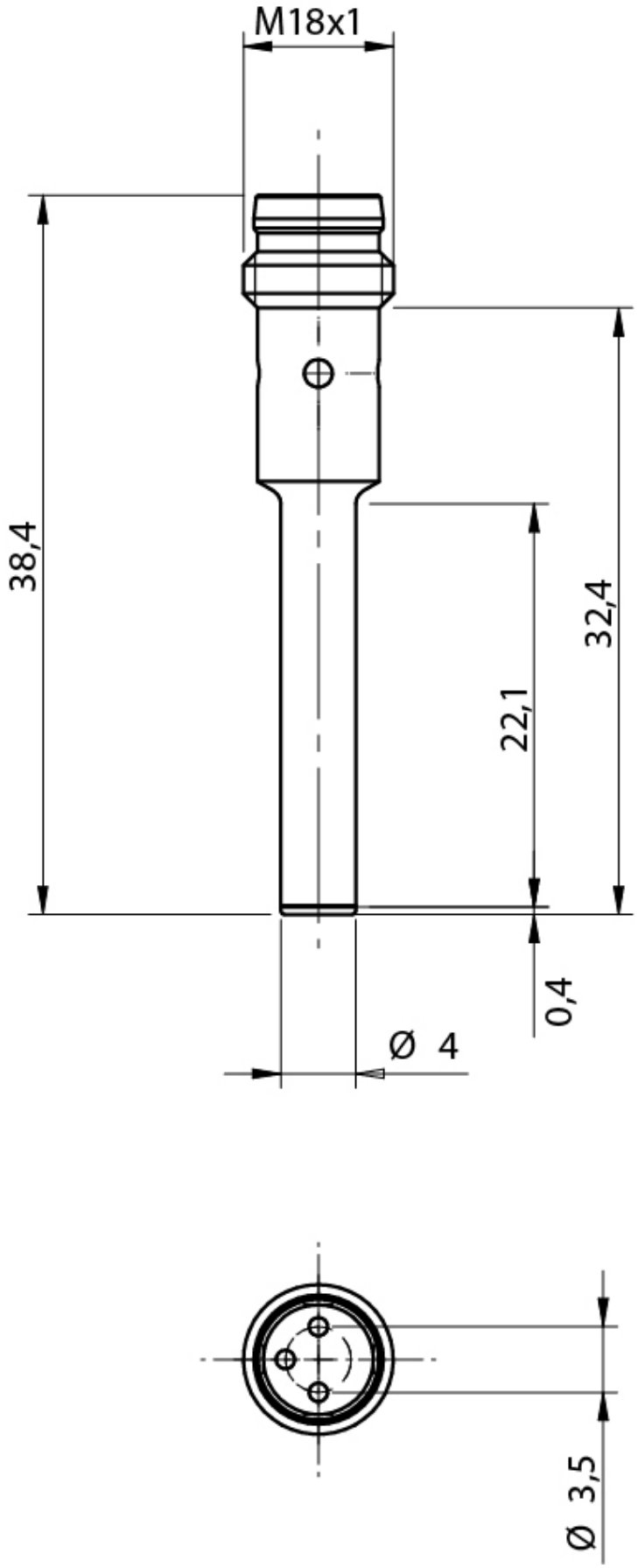

Response curves

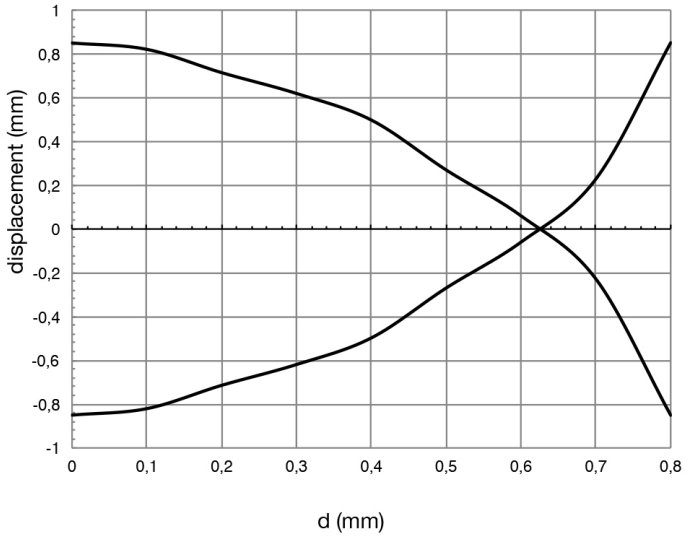

Installation

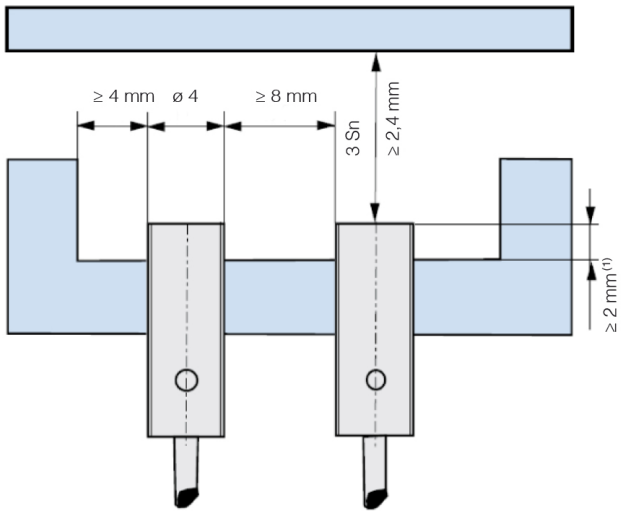

(1) ≥ 3 mm without ferro-magnetic material

Datasensing S.r.l.
Strada S.Caterina, 235
41122 Modena (MO)
Tel. 059 420411
Fax 059 253973
E-mail
info@datasensing.com

date of printing
25/11/2026
03:21:29