

# AA1

## AA1/CN-3A

**Ind.d3,NPN-NC,Cable,Sch-LD**

**Ø 3 CYLINDRICAL MINIATURIZED INDUCTIVE SENSORS**

# OVERVIEW

- Complete range of cylindrical ultraminiaturized inductive sensors Ø 3
- IP67 protection degree

# TECHNICAL FEATURES

Detection properties

| | |
|---|---|
| Nominal sensing distance | 1mm |
| Operanting distance | 0…0,81mm |
| Standard target | 3x3mm FE360 |
| Correction Factor | copper: 0,33 ± 10% / aluminium: 0,29 ± 10% / brass: 0,35 ± 10% / stainless steel: 0,71 ± 10% |
| Thermal drift of Sr | < 10% |
| Repeat Accuracy | < 5% (UB 24V Ta=23°C ±5°C) |

| | |
|---|---|
| Hysteresis | 1 … 20% |

Application

| | |
|---|---|
| Description | Ø3 standard flush mount |
| Functions | Proximity |

Outputs

| | |
|---|---|
| Output type | NPN |
| Output Function | NC |
| Switching frequency | 3,5kHz |

Electrical data

| | |
|---|---|
| Operating Voltage | 10...30Vdc |
| No-Load supply current | ≤ 10mA |
| Load current | ≤ 100mA |
| Leakage current | ≤ 10µA |
| Output voltage drop | ≤ 1,5V @100mA |
| Max ripple content | ≤ 10% |
| LED indicators | Yellow LED output state |
| Time delay before availability | ≤ 50ms |
| Short-circuit protection | Yes |
| Reverse Polarity Protection | Yes |

| | |
|---|---|
| Impulsive Overvoltage Protection | Yes |
| Protection against inductive loads | Yes |

Mechanical data

| | |
|---|---|
| Dimensions | Ø3 / L = 22mm |
| Mounting | Shielded |
| Material | AISI303 Stainless Steel |
| Housing material | AISI303 Stainless Steel |
| Weight | 30g |
| Connections | 2m PUR Cable |
| Active Head Material | PBT |
| Operating temperature | -25°C…+70°C |
| Diameter/Dimension | Ø3 |

Test/Approvals

| | |
|---|---|
| Approvals | CE UL |
| EMC compatibility | IEC 60947-5-2 |
| Shocks and vibrations | Vibration IEC 60068-2-6 / Shock IEC 60068-2-27 |
| Degree of protection | IP67 |

Generical Data

| | |
|---|---|
| Dimensions | Ø3 / L = 22mm |
| Operating Temperature | -25°C…+70°C |
| Mechanical Protection | IP67 |

# CONNECTIONS

Eletrical diagram

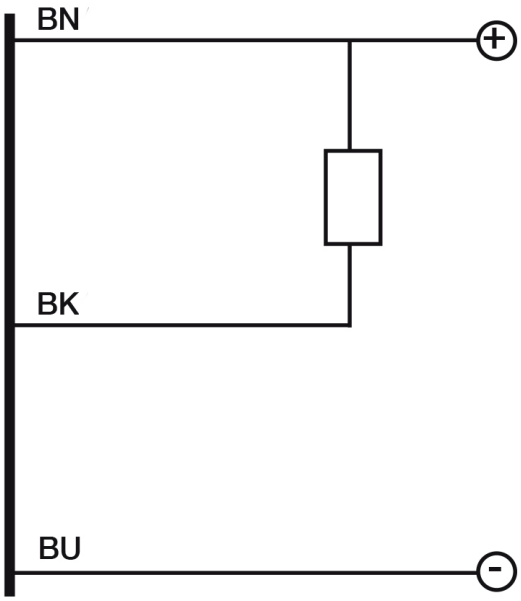


# OTHERS

Dimensions

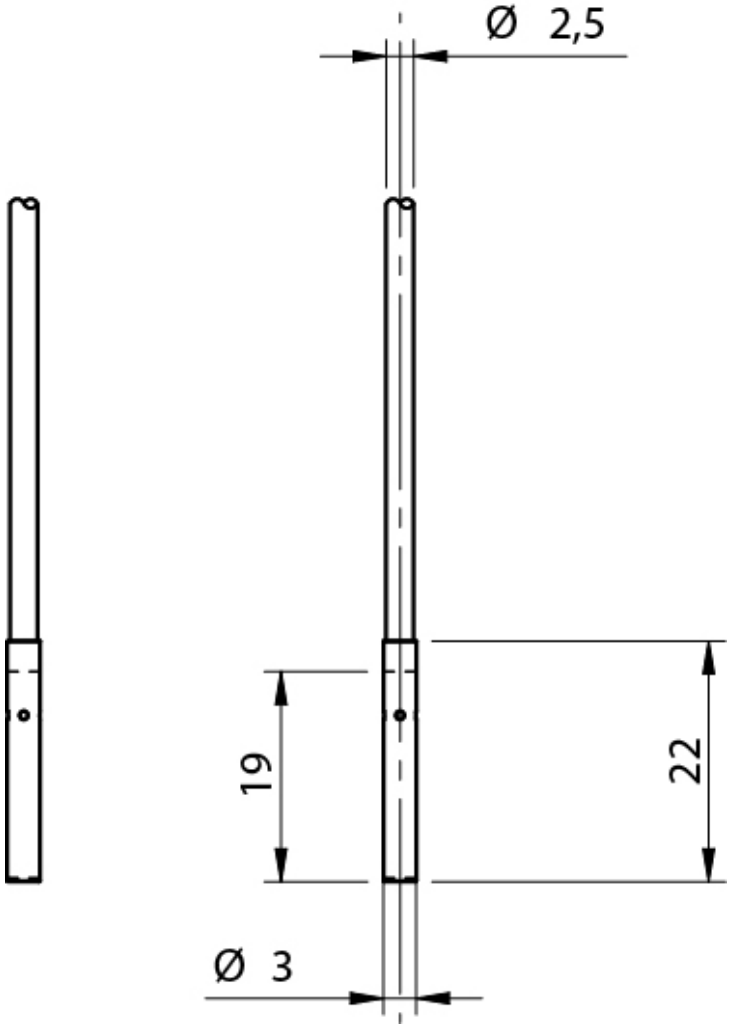


Response curves

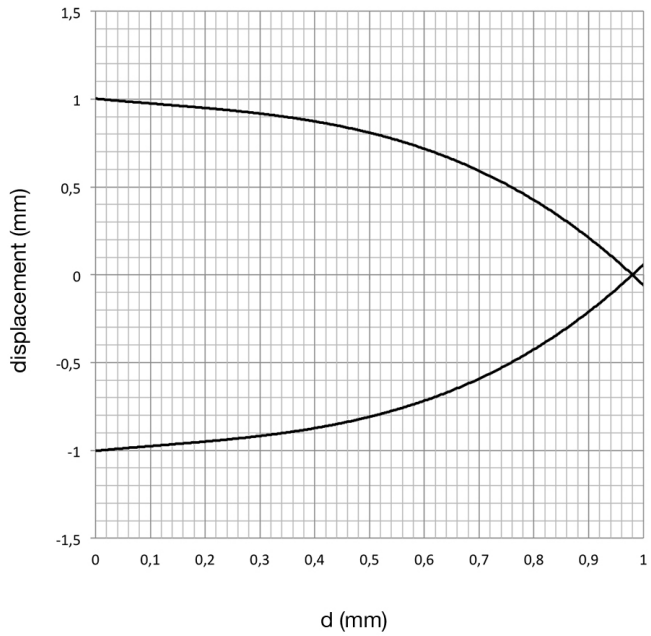


Installation

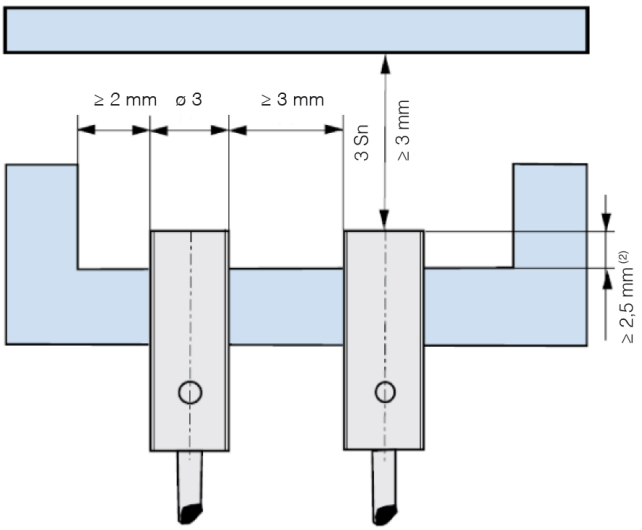


(2) ≥ 3 mm without ferro-magnetic material

**Datasensing S.r.l.**
Strada S.Caterina, 235
41122 Modena (MO)
Tel. 059 420411
Fax 059 253973
E-mail
info@datasensing.com

**date of printing**
24/11/2026
23:18:45