

# C18

## C18P/BP-1A

**Cap.M18,PNP-NO+NC,Cable,Sch-LD**

**M18 CYLINDRICAL CAPACITIVE SENSORS**

# OVERVIEW

- DC or AC supply voltage
- High noise immunity
- Shielded and unshielded models
- Adjustable sensitivity
- Plastic housing

# TECHNICAL FEATURES

Detection properties

| | |
|---|---|
| Nominal sensing distance | 3…8mm |
| Thermal drift of Sr | < 20% |
| Repeat Accuracy | 5% |
| Sensitivity adjustment | Yes |
| Hysteresis | ≤ 20% |

## Outputs

| | |
|---|---|
| Output type | PNP |
| Output Function | NO + NC |
| Switching frequency | 50Hz |

## Electrical data

| | |
|---|---|
| Operating Voltage | 10...40Vdc |
| No-Load supply current | ≤ 12mA |
| Load current | ≤ 200mA |
| Leakage current | ≤ 100µA |
| Output voltage drop | ≤ 2,5V @ IL = 200mA |
| Max ripple content | ≤10% |
| LED indicators | Yellow LED (object detected) |
| Time delay before availability | ≤ 200ms |
| Short-circuit protection | polarity reversal, overvoltage |
| Reverse Polarity Protection | Yes |
| Impulsive Overvoltage Protection | Yes |

## Mechanical data

| | |
|---|---|
| Dimensions | M18 x 1 / L = 87mm |
| Mounting | Shielded |

| | |
|---|---|
| Housing material | Polyester |
| Weight | 150g |
| Connections | 2m PVC cable |
| Active Head Material | Polyester |
| Tightening torque | 2,6Nm |
| Operating temperature | -35°C…+85°C (without freeze) |
| Storage temperature | -40°C…+85°C |
| Diameter/Dimension | M18 |

Test/Approvals

| | |
|---|---|
| Approvals | CE cULus |
| EMC compatibility | IEC 60947-5-2 |
| Shocks and vibrations | Vibration IEC 60068-2-6 / Shock IEC 60068-2-27 |
| Degree of protection | IP67, IP68 |

Accessories

| | |
|---|---|
| Supplied Accessories | screw driver, 2 x M18 nuts |

Generical Data

| | |
|---|---|
| Dimensions | M18 x 1 / L = 87mm |
| Operating Temperature | -35°C…+85°C (without freeze) |

| | |
|---|---|
| Mechanical Protection | IP67, IP68 |

# CONNECTIONS

Eletrical diagram

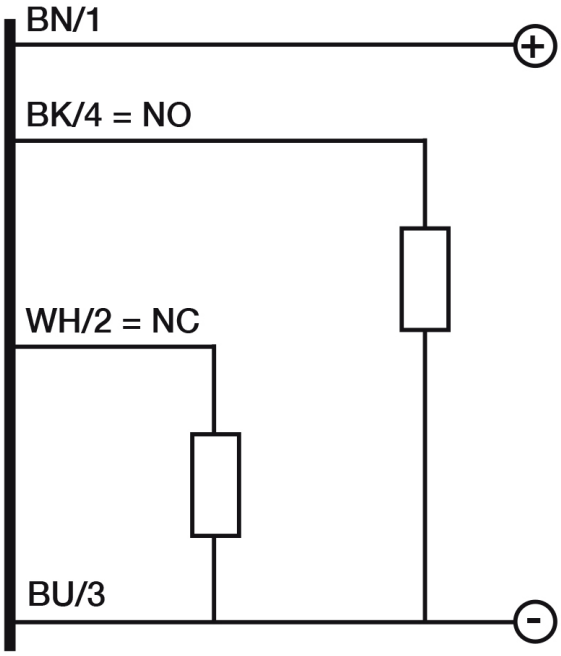


# OTHERS

Dimensions

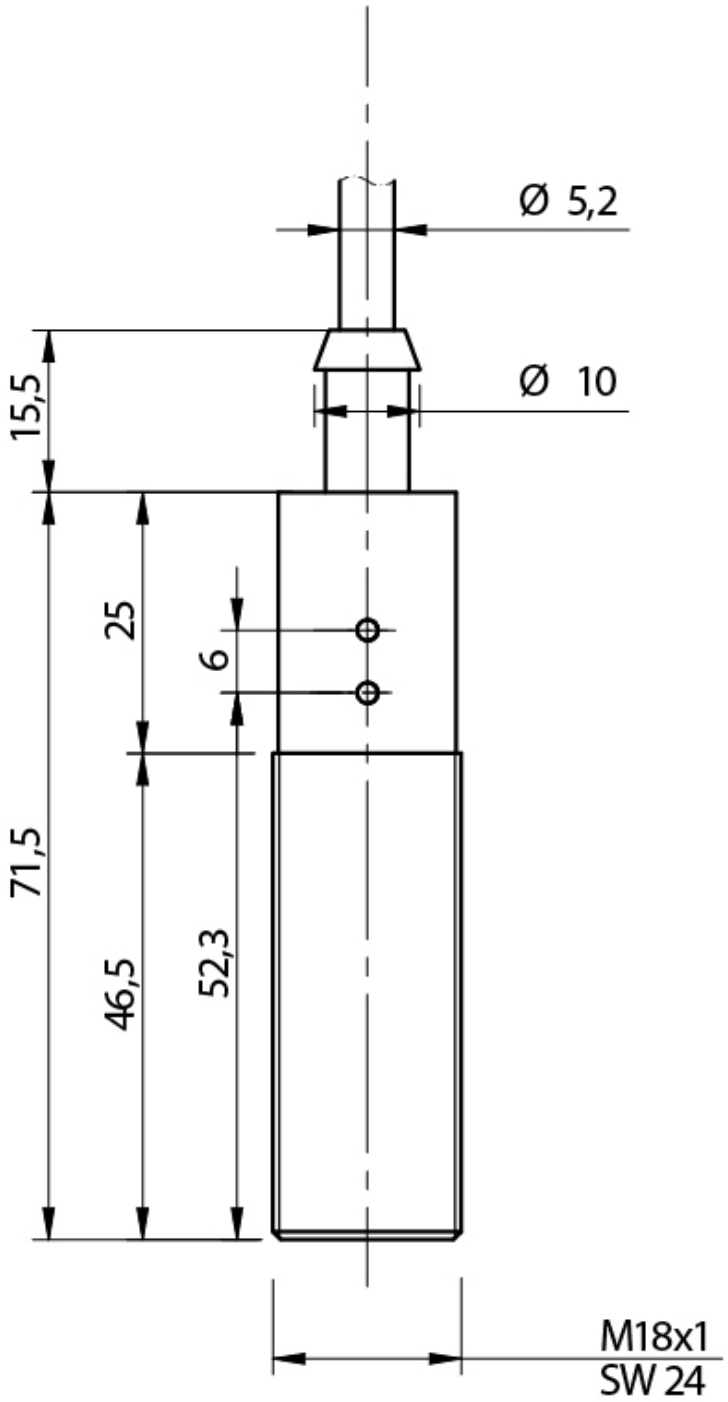


**Datasensing S.r.l.**
Strada S.Caterina, 235
41122 Modena (MO)
Tel. 059 420411
Fax 059 253973
E-mail
info@datasensing.com

**date of printing**
24/11/2026
06:50:30