

C18

C18P/BN-1E

Cap.M18,NPN-NO+NC,M12 plug,Sch-LD

M18 CYLINDRICAL CAPACITIVE SENSORS

OVERVIEW

- DC or AC supply voltage
- High noise immunity
- Shielded and unshielded models
- Adjustable sensitivity
- Plastic housing

TECHNICAL FEATURES

Detection properties

Nominal sensing distance	3…8mm
Thermal drift of Sr	< 20%
Repeat Accuracy	5%
Sensitivity adjustment	Yes
Hysteresis	≤ 20%

Outputs

Output type	NPN
Output Function	NO + NC
Switching frequency	50Hz

Electrical data

Operating Voltage	10...40Vdc
No-Load supply current	≤ 12mA
Load current	≤ 200mA
Leakage current	≤ 100µA
Output voltage drop	≤ 2,5V @ IL = 200mA
Max ripple content	≤10%
LED indicators	Yellow LED (object detected)
Time delay before availability	≤ 200ms
Short-circuit protection	polarity reversal, overvoltage
Reverse Polarity Protection	Yes
Impulsive Overvoltage Protection	Yes

Mechanical data

Dimensions	M18 x 1 / L = 83mm
Mounting	Shielded

Housing material	Polyester
Weight	65g
Connections	M12 plug
Active Head Material	Polyester
Tightening torque	2,6Nm
Operating temperature	-35°C…+85°C (without freeze)
Storage temperature	-40°C…+85°C
Diameter/Dimension	M18

Test/Approvals

Approvals	CE cULus
EMC compatibility	IEC 60947-5-2
Shocks and vibrations	Vibration IEC 60068-2-6 / Shock IEC 60068-2-27
Degree of protection	IP67, IP68

Accessories

Supplied Accessories	screw driver, 2 x M18 nuts

Generical Data

Dimensions	M18 x 1 / L = 83mm
Operating Temperature	-35°C…+85°C (without freeze)

CONNECTIONS

Eletrical diagram

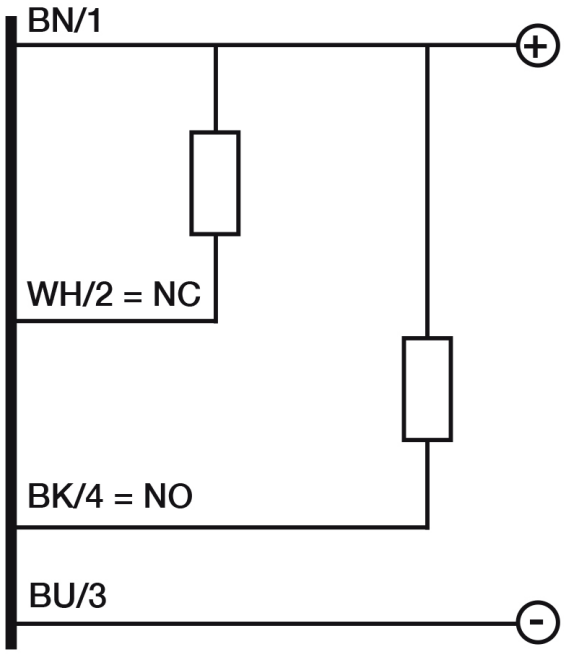

Connector

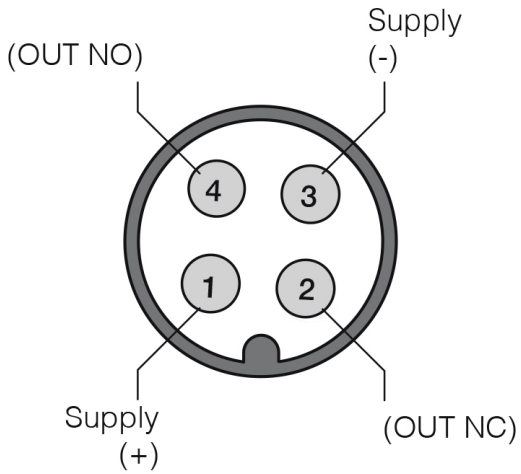

OTHERS

Dimensions

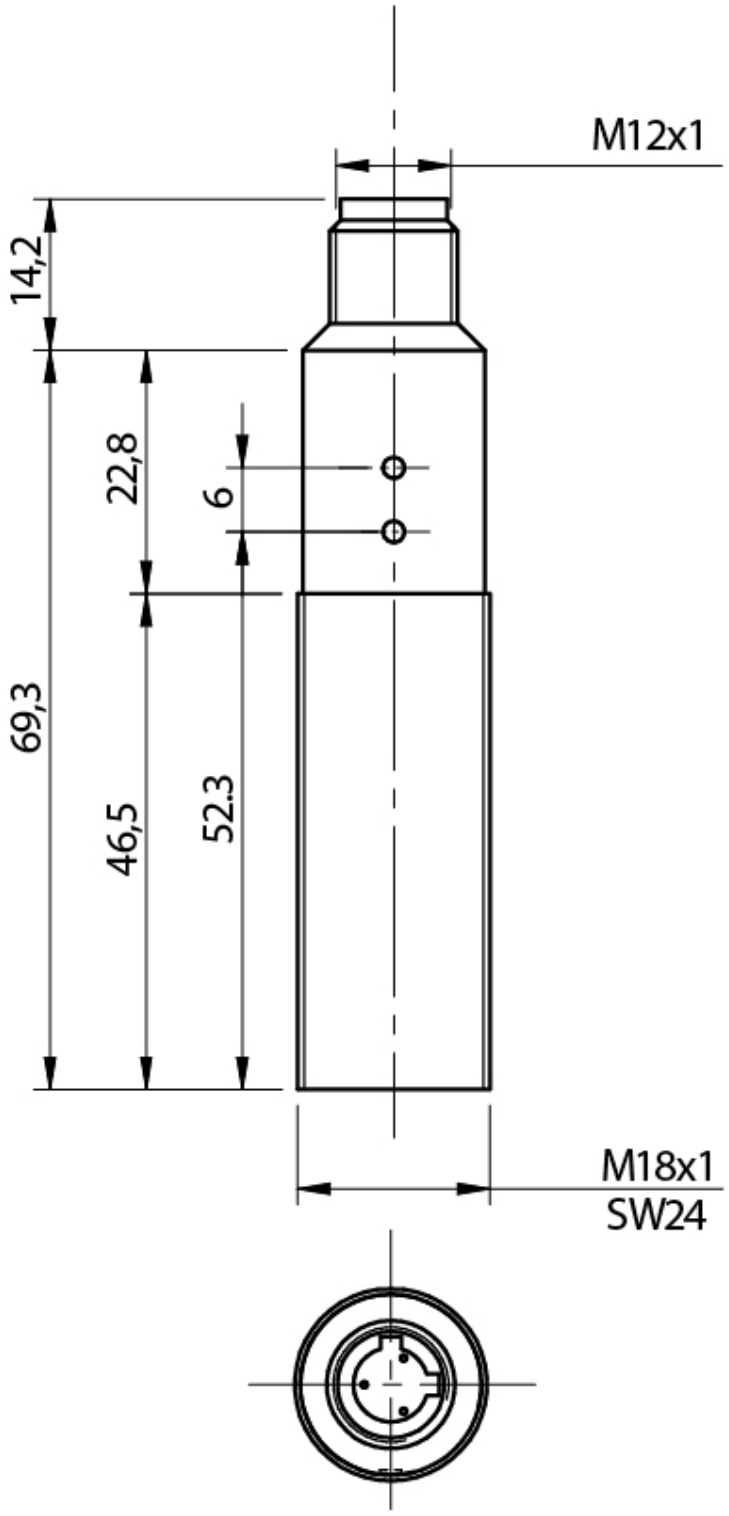

41122 Modena (MO)
Tel. 059 420411
Fax 059 253973
E-mail
info@datasensing.com