

C18

C18P/A0-1A

Cap.M18,2 wires AC-NO,Cable,Sch-LD

M18 CYLINDRICAL CAPACITIVE SENSORS

OVERVIEW

- DC or AC supply voltage
- High noise immunity
- Shielded and unshielded models
- Adjustable sensitivity
- Plastic housing

TECHNICAL FEATURES

Detection properties

Nominal sensing distance	3…8mm
Thermal drift of Sr	< 20%
Repeat Accuracy	5%
Sensitivity adjustment	Yes
Hysteresis	≤ 20%

Outputs

Output type	SCR
Output Function	NO
Switching frequency	10Hz

Electrical data

Operating Voltage	20...250Vac/50-60Hz
No-Load supply current	≤ 12mA
Load current	≤ 500mA; max 2,5A 20ms
Leakage current	≤ 100µA
Output voltage drop	≤ 10VAC @ IL ≥20mA
Max ripple content	≤10%
LED indicators	Yellow LED (object detected)
Time delay before availability	≤ 200ms
Short-circuit protection	polarity reversal, overvoltage
Reverse Polarity Protection	Yes
Impulsive Overvoltage Protection	Yes

Mechanical data

Dimensions	M18 x 1 / L = 87mm
Mounting	Shielded

Housing material	Polyester
Weight	150g
Connections	2m PVC cable
Active Head Material	Polyester
Tightening torque	2,6Nm
Operating temperature	-35°C…+85°C (ohne Kondensation)
Storage temperature	-40°C…+85°C
Diameter/Dimension	M18

Test/Approvals

Approvals	CE cULus
EMC compatibility	IEC 60947-5-2
Shocks and vibrations	Vibration IEC 60068-2-6 / Shock IEC 60068-2-27
Degree of protection	IP67, IP68

Accessories

Supplied Accessories	screw driver, 2 x M18 nuts

Generical Data

Dimensions	M18 x 1 / L = 87mm
Operating Temperature	-35°C…+85°C (without freeze)

Mechanical Protection	IP67, IP68

CONNECTIONS

Eletrical diagram

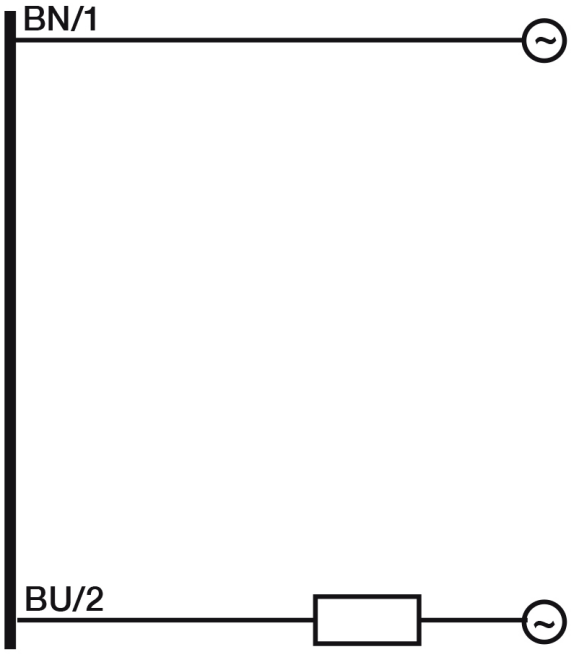

OTHERS

Dimensions

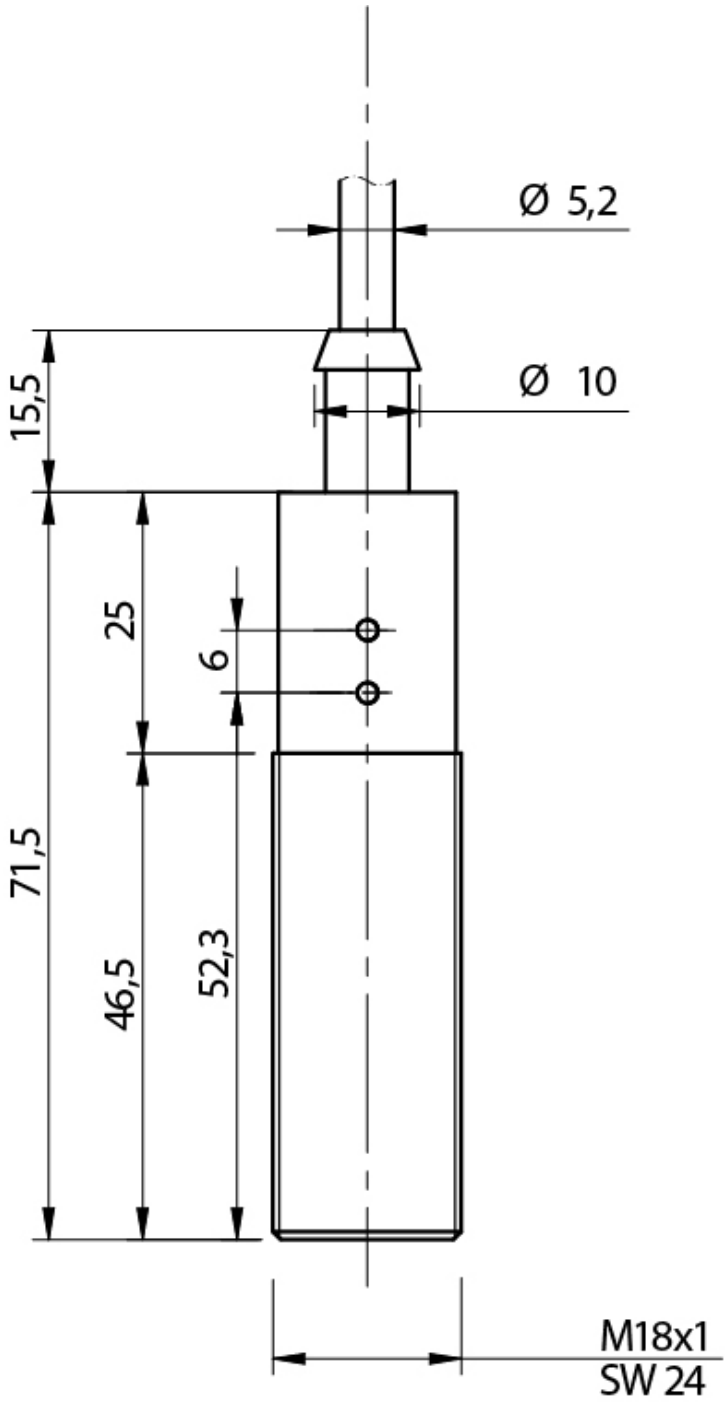

Datasensing S.r.l.
Strada S.Caterina, 235
41122 Modena (MO)
Tel. 059 420411
Fax 059 253973
E-mail
info@datasensing.com

date of printing
24/11/2026
07:09:10