

C12

C12P/00-3A

Cap.M12,NPN/PNP-NO/NC,Cable,Sch/Nsch-LD
M12 CYLINDRICAL CAPACITIVE SENSORS

OVERVIEW

TECHNICAL FEATURES

Detection properties

Nominal sensing distance	0,5…4mm shielded; 0,5…8mm unshielded
Thermal drift of Sr	< 20%
Repeat Accuracy	5%
Sensitivity adjustment	Yes
Hysteresis	≤ 20%

Outputs

Output type	NPN/PNP

Output Function	NO/NC
Switching frequency	≤15Hz

Electrical data

Operating Voltage	10...40Vdc
No-Load supply current	≤ 12mA
Load current	≤ 200mA
Leakage current	≤ 300µA
Output voltage drop	≤ 2,5V @ IL = 200mA
Max ripple content	≤10%
LED indicators	Yellow LED (object detected), green LED power supply/stability
Time delay before availability	≤ 200ms
Short-circuit protection	polarity reversal, overvoltage
Reverse Polarity Protection	Yes
Impulsive Overvoltage Protection	Yes

Mechanical data

Dimensions	M12 x 1 / L = 78mm
Mounting	Shielded/Unshielded
Housing material	Polyester

Weight	110g
Connections	2m PVC cable
Active Head Material	Polyester
Operating temperature	-35°C…+85°C (without freeze)
Storage temperature	-40°C…+85°C
Diameter/Dimension	M12

Test/Approvals

Approvals	CE cULus
EMC compatibility	IEC 60947-5-2
Shocks and vibrations	Vibration IEC 60068-2-6 / Shock IEC 60068-2-27
Degree of protection	IP67

Accessories

Supplied Accessories	2 x M12 nuts

Generical Data

Dimensions	M12 x 1 / L = 78mm
Operating Temperature	-35°C…+85°C (without freeze)
Mechanical Protection	IP67

CONNECTIONS

Eletrical diagram

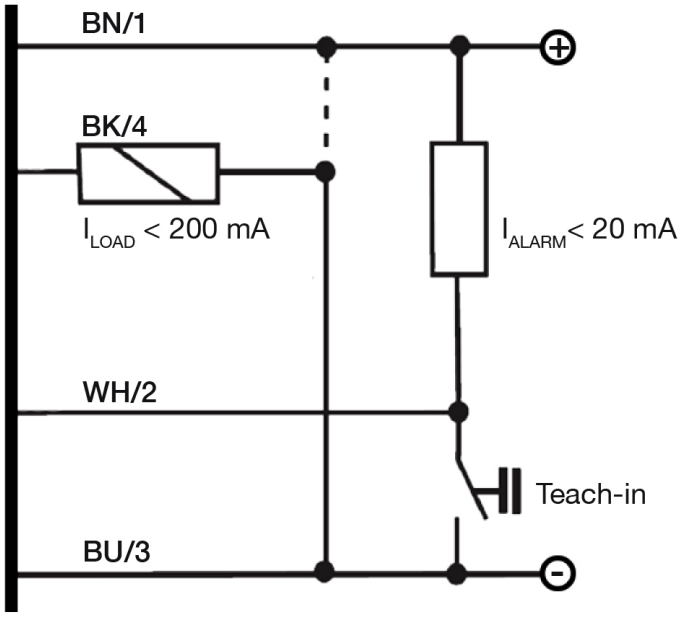

OTHERS

Dimensions

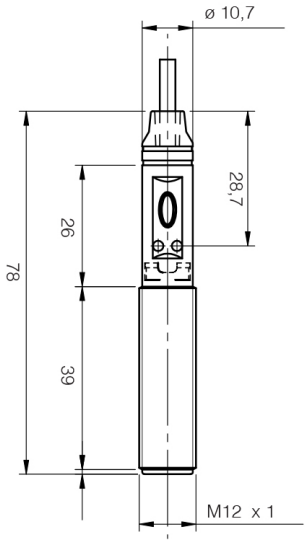

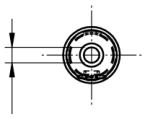

Response curves

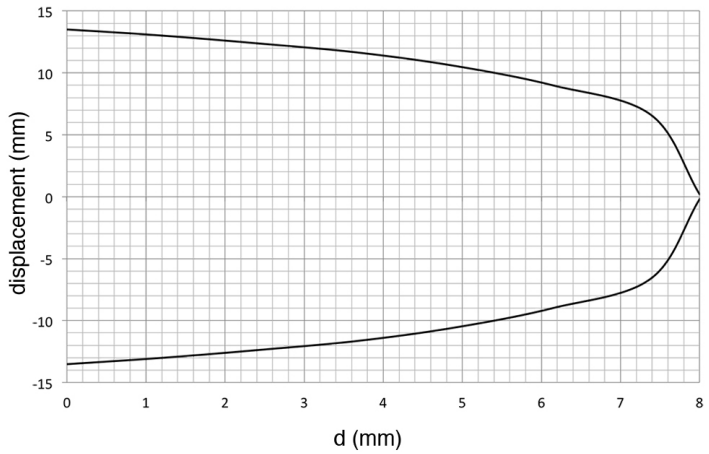

Datasensing S.r.l.
Strada S.Caterina, 235
41122 Modena (MO)
Tel. 059 420411
Fax 059 253973
E-mail
info@datasensing.com

date of printing
24/11/2026
05:03:21