


# CT

# CT1/AP-1H

**Cap.M30,PNP-NO,M12 plug,Sch-STD**

**M30 CYLINDRICAL CAPACITIVE SENSORS**

## OVERVIEW

- Sensitivity adjustment with trimmer
- Metal housing
- IP65 protection degree
- Complete protection against electrical damages
- Axial cable exit or M12 plug cable exit

CE

## TECHNICAL FEATURES

Detection properties

| | |
|---|---|
| Nominal sensing distance | 2…15mm |
| Thermal drift of Sr | < 20% |
| Repeat Accuracy | 10% |
| Sensitivity adjustment | Yes |
| Hysteresis | ≤ 20% |

## Outputs

| | |
|---|---|
| Output type | PNP |
| Output Function | NO |
| Switching frequency | 100Hz |

## Electrical data

| | |
|---|---|
| Operating Voltage | 10...30Vdc |
| No-Load supply current | ≤ 8mA |
| Load current | ≤ 200mA |
| Leakage current | ≤ 10mA |
| Output voltage drop | 0,75/1,8V max @ IL=10/200 mA |
| Max ripple content | ≤10% |
| LED indicators | Green LED power, red LED (object detected) |
| Time delay before availability | ≤100ms |
| Short-circuit protection | Yes, autoreset |
| Reverse Polarity Protection | Yes |
| Impulsive Overvoltage Protection | Yes |

## Mechanical data

| | |
|---|---|
| Dimensions | M30 / L = 87mm |
| Mounting | Shielded |

| | |
|---|---|
| Housing material | Nickel-plated brass |
| Weight | 185g |
| Connections | M12 plug |
| Active Head Material | PBT |
| Tightening torque | 50Nm |
| Operating temperature | -25°C…+70°C |
| Diameter/Dimension | M30 |

Test/Approvals

| | |
|---|---|
| Approvals | CE cULus |
| EMC compatibility | IEC 60947-5-2 |
| Shocks and vibrations | Vibration IEC 60068-2-6 / Shock IEC 60068-2-27 |
| Degree of protection | IP65 |

Accessories

| | |
|---|---|
| Supplied Accessories | screw driver, 2 x M30 nuts |

Generical Data

| | |
|---|---|
| Dimensions | M30 / L = 87mm |
| Operating Temperature | -25°C…+70°C (without freeze) |
| Mechanical Protection | IP65 |

# CONNECTIONS

Eletrical diagram

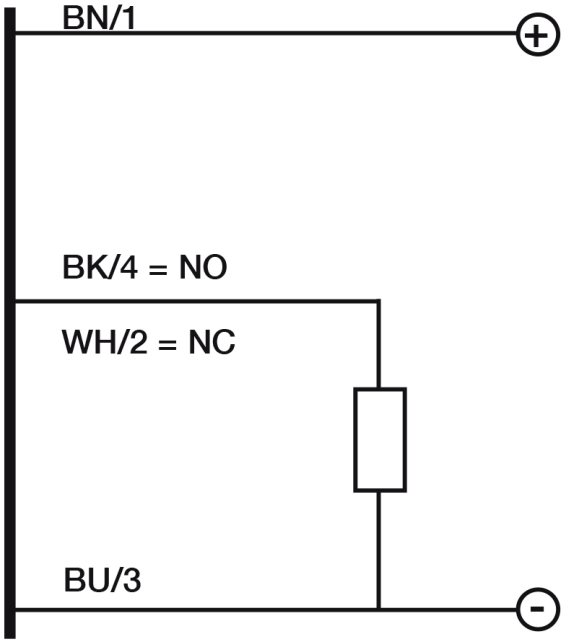


Connector

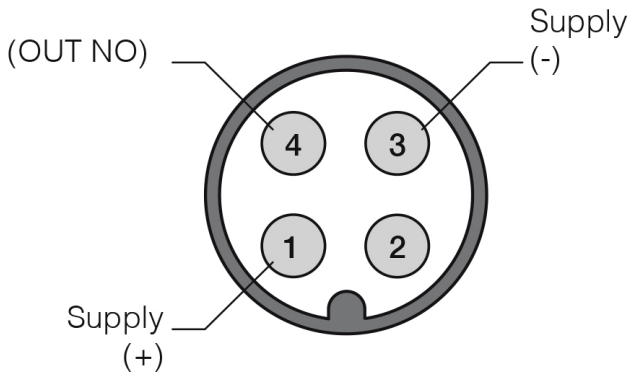


# OTHERS

Dimensions

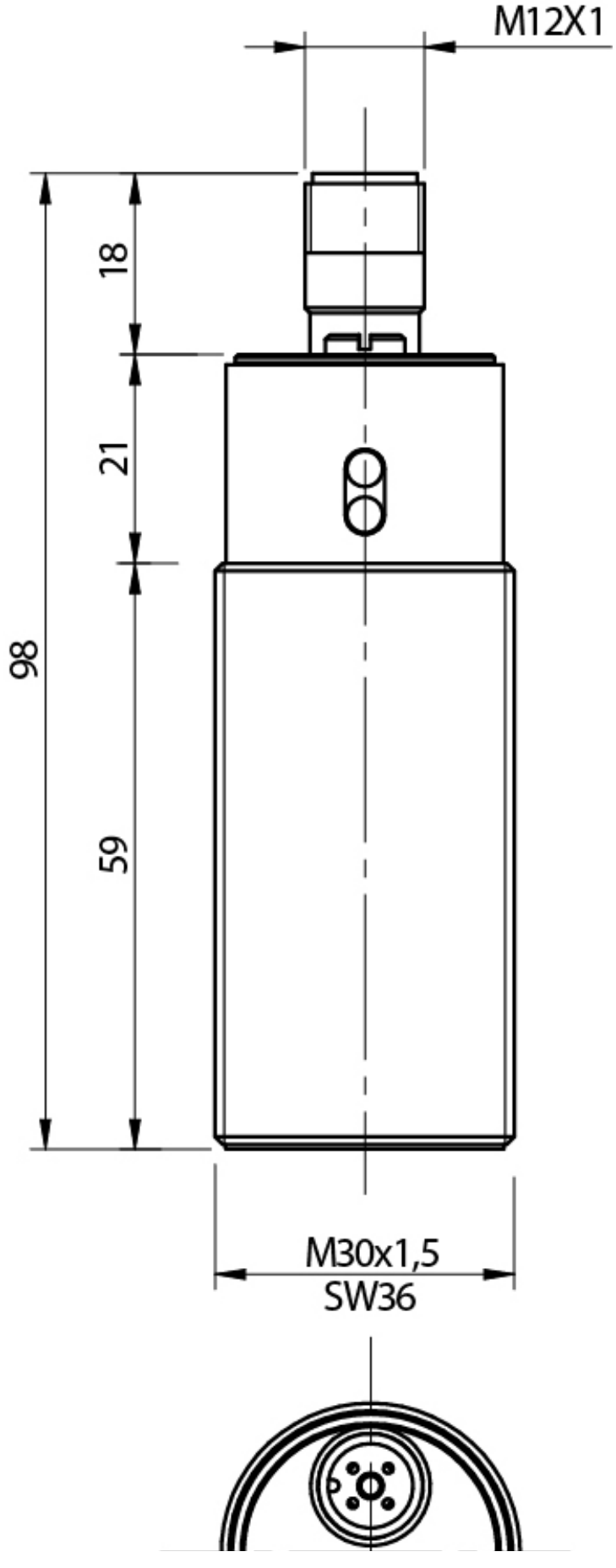

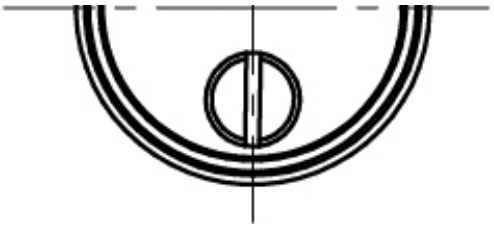

Response curves

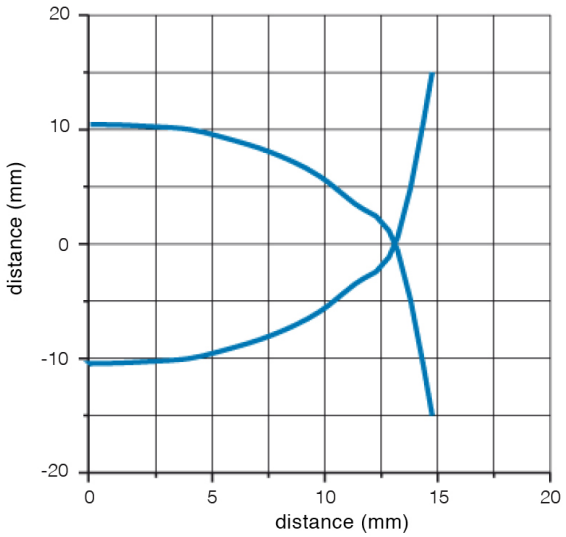


**Datasensing S.r.l.**
Strada S.Caterina, 235
41122 Modena (MO)
Tel. 059 420411
Fax 059 253973
E-mail
info@datasensing.com

**date of printing**
24/11/2026
05:48:29