

CT

CT1/AN-1H

Cap.M30,NPN-NO,M12 plug,Sch-STD

M30 CYLINDRICAL CAPACITIVE SENSORS

OVERVIEW

- Sensitivity adjustment with trimmer
- Metal housing
- IP65 protection degree
- Complete protection against electrical damages
- Axial cable exit or M12 plug cable exit

CE

TECHNICAL FEATURES

Detection properties

Nominal sensing distance	2…15mm
Thermal drift of Sr	< 20%
Repeat Accuracy	10%
Sensitivity adjustment	Yes
Hysteresis	≤ 20%

Outputs

Output type	NPN
Output Function	NO
Switching frequency	100Hz

Electrical data

Operating Voltage	10...30Vdc
No-Load supply current	≤ 8mA
Load current	≤ 200mA
Leakage current	≤ 10mA
Output voltage drop	0,75/1,8V max @ IL=10/200 mA
Max ripple content	≤10%
LED indicators	Green LED power, red LED (object detected)
Time delay before availability	≤100ms
Short-circuit protection	Yes, autoreset
Reverse Polarity Protection	Yes
Impulsive Overvoltage Protection	Yes

Mechanical data

Dimensions	M30 / L = 87mm
Mounting	Shielded

Housing material	Nickel-plated brass
Weight	185g
Connections	M12 plug
Active Head Material	PBT
Tightening torque	50Nm
Operating temperature	-25°C…+70°C
Diameter/Dimension	M30

Test/Approvals

Approvals	CE cULus
EMC compatibility	IEC 60947-5-2
Shocks and vibrations	Vibration IEC 60068-2-6 / Shock IEC 60068-2-27
Degree of protection	IP65

Accessories

Supplied Accessories	screw driver, 2 x M30 nuts

Generical Data

Dimensions	M30 / L = 87mm
Operating Temperature	-25°C…+70°C (without freeze)
Mechanical Protection	IP65

CONNECTIONS

Eletrical diagram

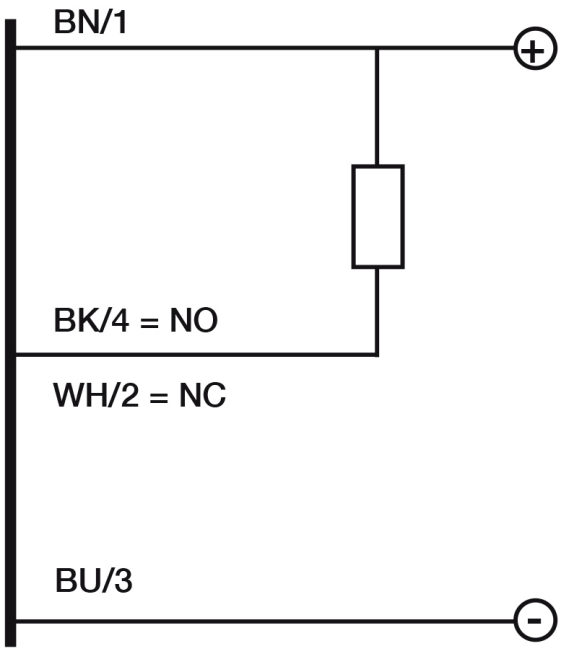

Connector

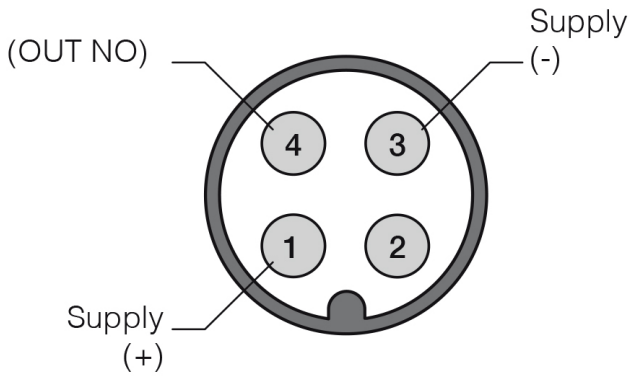

OTHERS

Dimensions

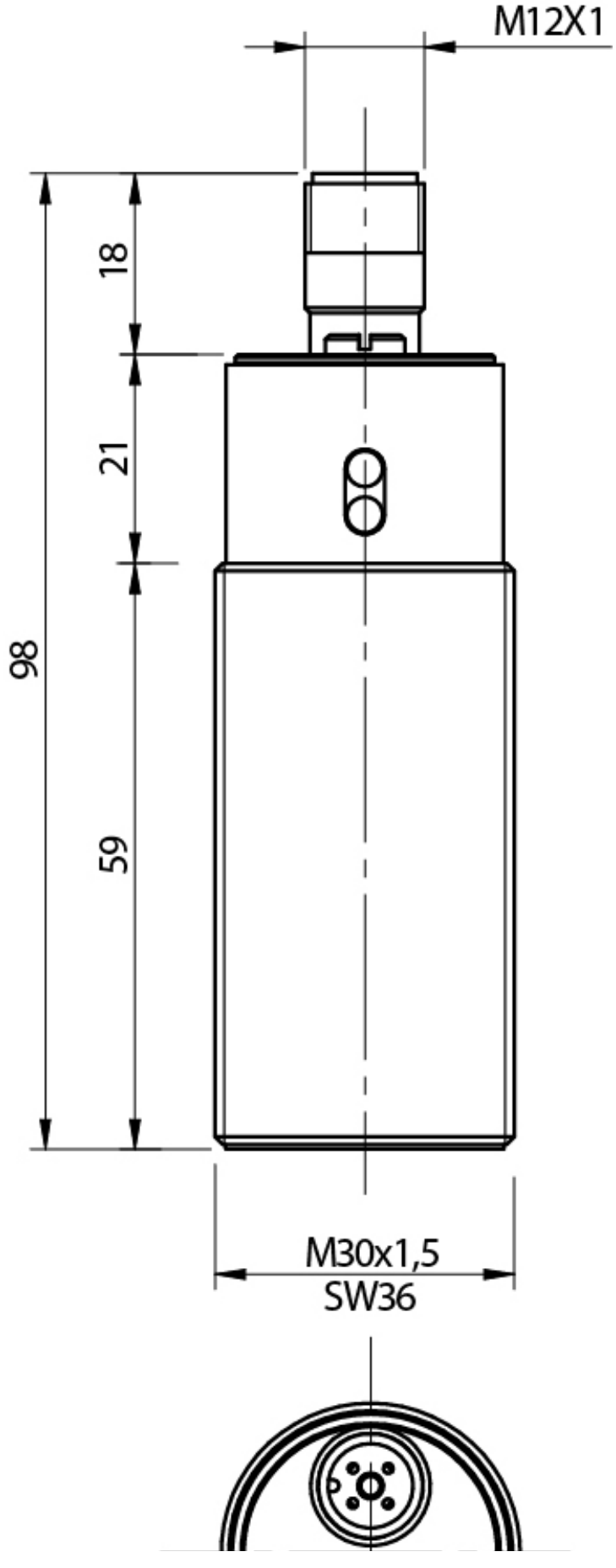

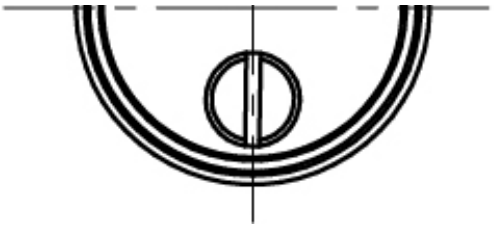

Response curves

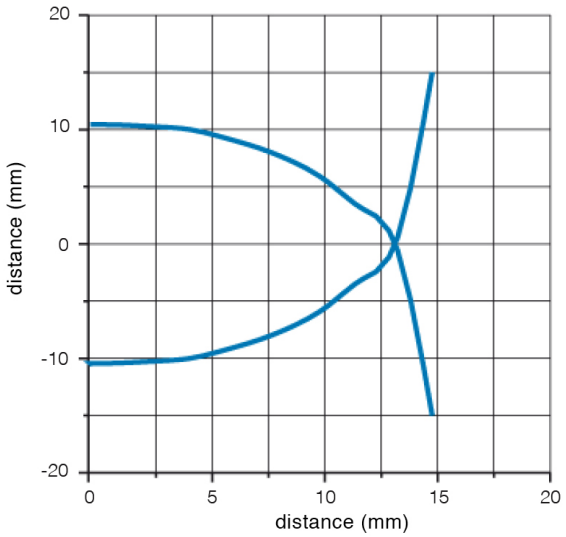

Datasensing S.r.l.
Strada S.Caterina, 235
41122 Modena (MO)
Tel. 059 420411
Fax 059 253973
E-mail
info@datasensing.com

date of printing
24/11/2026
05:44:55