

C30

C30P/00-1E

Cap.M30, AC-NO/NC,1/2"-20UNF,Sch-LD

M30 CYLINDRICAL CAPACITIVE SENSORS

OVERVIEW

- DC or AC supply voltage
- High noise immunity
- Shielded and unshielded models
- Adjustable sensitivity
- Metallic or plastic housing

TECHNICAL FEATURES

Detection properties

Nominal sensing distance	2…16mm
Thermal drift of Sr	< 20%
Repeat Accuracy	5%
Sensitivity adjustment	Yes
Hysteresis	≤ 20%

Outputs

Output type	SCR
Output Function	NO/NC
Switching frequency	10Hz

Electrical data

Operating Voltage	20...250Vac/50-60Hz
No-Load supply current	≤ 12mA
Load current	2,5A max (20ms)
Leakage current	≤ 100µA
Output voltage drop	10VAC @ IL≥200mA
Max ripple content	≤10%
LED indicators	Yellow LED (object detected)
Time delay before availability	≤ 200ms
Short-circuit protection	Yes, autoreset
Reverse Polarity Protection	Yes
Impulsive Overvoltage Protection	Yes

Mechanical data

Dimensions	M30 / L = 79mm
Mounting	Shielded

Housing material	Polyester
Weight	100g
Connections	M12 plug
Active Head Material	Polyester
Tightening torque	50Nm
Operating temperature	-25°C…+80°C (without freeze)
Storage temperature	-40°C…+85°C
Diameter/Dimension	M30

Test/Approvals

Approvals	CE cULus
EMC compatibility	IEC 60947-5-2
Shocks and vibrations	Vibration IEC 60068-2-6 / Shock IEC 60068-2-27
Degree of protection	IP67

Accessories

Supplied Accessories	screw driver, 2 x M30 nuts

Generical Data

Dimensions	M30 / L = 79mm
Operating Temperature	-25°C…+80°C (without freeze)

Mechanical Protection	IP67

CONNECTIONS

Eletrical diagram

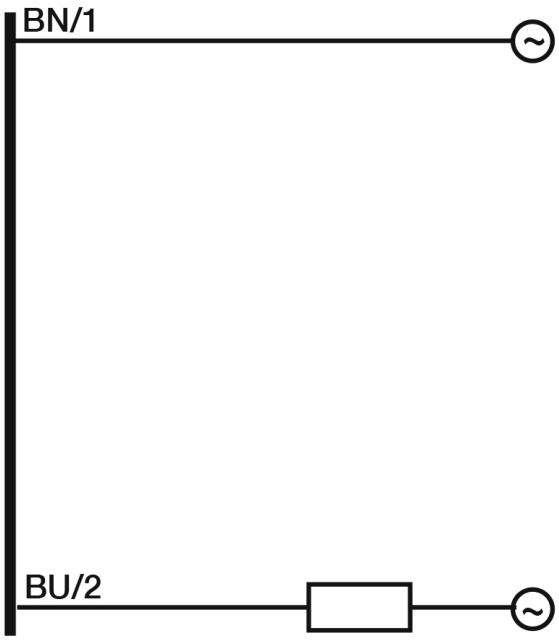

Connector

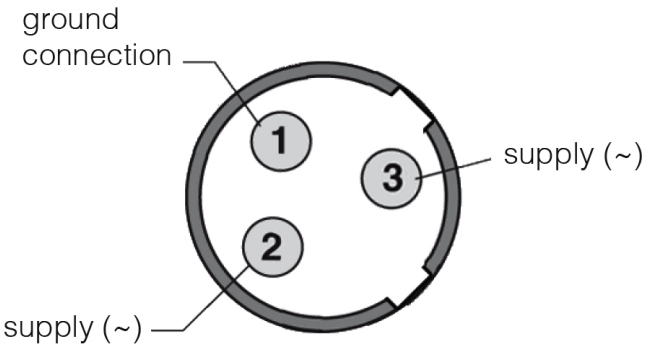

OTHERS

Dimensions

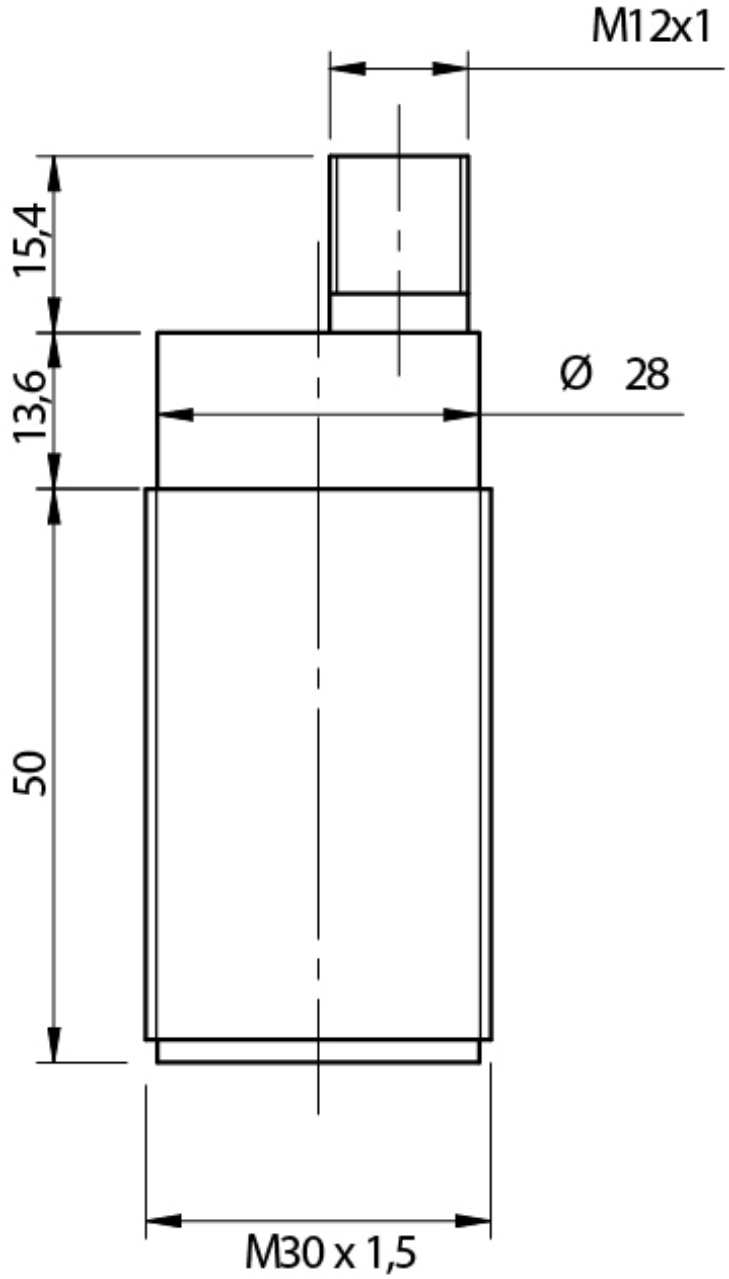

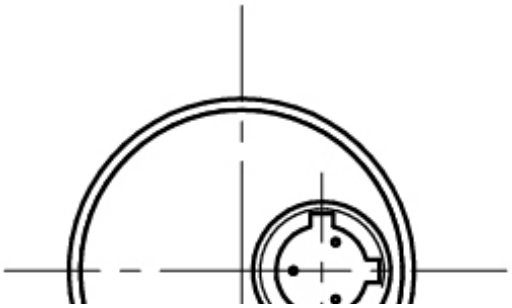



Datasensing S.r.l.
Strada S.Caterina, 235
41122 Modena (MO)
Tel. 059 420411
Fax 059 253973
E-mail
info@datasensing.com

date of printing
24/11/2026
06:55:21