

CQ50

CQ50/AP-4A

Cap.30x50x7,PNP-NO,Cable,Sch-STD

7 X 30 X 50 MM CUBIC CAPACITIVE SENSORS

OVERVIEW

- DC supply voltage
- No adjustable sensitivity
- Flat polycarbonate plastic housing

CE

TECHNICAL FEATURES

Detection properties

Nominal sensing distance	10mm
Thermal drift of Sr	< 20%
Repeat Accuracy	5%
Sensitivity adjustment	NO
Hysteresis	≤ 20%

Outputs

Output type	PNP
Output Function	NO
Switching frequency	10Hz

Electrical data

Operating Voltage	10..30Vdc
No-Load supply current	≤ 10mA
Load current	≤50mA
Leakage current	≤ 100μA
Output voltage drop	1,5Vmax @ IL=50mA
Max ripple content	≤10%
Time delay before availability	≤100ms
Short-circuit protection	Yes, autoreset
Reverse Polarity Protection	Yes
Impulsive Overvoltage Protection	Yes

Mechanical data

Dimensions	50x30x7mm
Mounting	Shielded
Housing material	noryl
Weight	70g

Connections	2m PVC cable
Active Head Material	noryl
Operating temperature	0…60°C (without freeze)
Storage temperature	-30°C…+75°C
Diameter/Dimension	50x30x7mm

Test/Approvals

Approvals	CE
EMC compatibility	IEC 60947-5-2
Degree of protection	IP67

Generical Data

Dimensions	50x30x7mm
Operating Temperature	0…60°C (without freeze)
Mechanical Protection	IP67

CONNECTIONS

Eletrical diagram

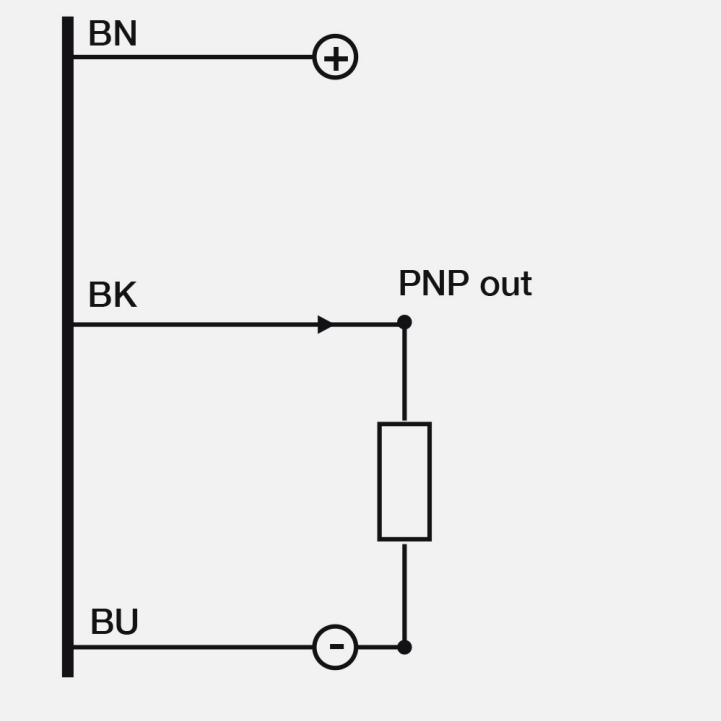

OTHERS

Dimensions

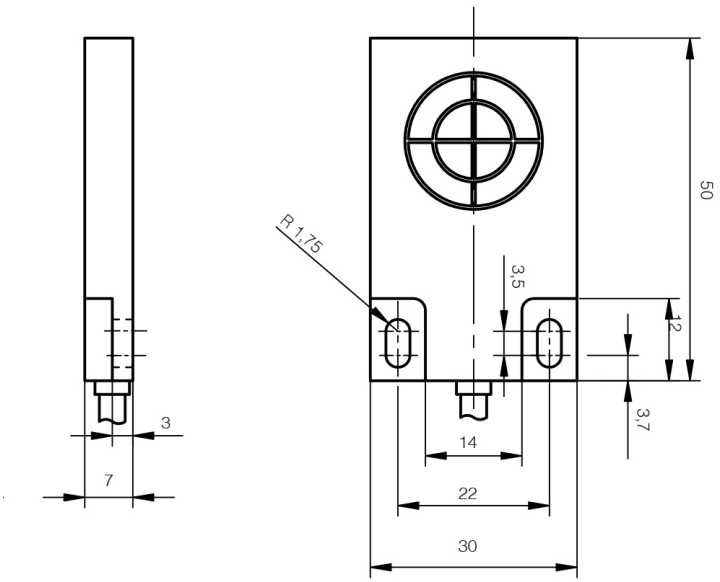

Datasensing S.r.l.
Strada S.Caterina, 235
41122 Modena (MO)

date of printing
24/11/2026
06:04:05

Tel. 059 420411
Fax 059 253973
E-mail
info@datasensing.com