

CR

CR0/BP-1V

Area Sen, H=69mm-10mm pitch,Reflex
RETROREFLECTIVE POLARIZED AREA SENSORS

OVERVIEW

- Area height controlled 69 mm
- Maximun operative distance up to 4.5 m
- Minimum object detection diam. 6mm
- Two teach-in types: fine and standard
- Optical pitch 10mm
- Protection degree IP67
- Blanking function

TECHNICAL FEATURES

Detection properties

Nominal sensing distance	0,2 … 4,5m (with RL106G)
Thermal drift of Sr	≤10%
Beams space	10mm
controlled height	69mm
minimum detectable object	Ø 3…7mm @ 2m RL106G - Ø 3…16mm @ 4,5m RL106G

number of rays	6
Sensitivity adjustment	Teach in: fine < 3s; standard > 6s

Application

Function Principle	Retroreflective polarized area sensor

Outputs

Output type	PNP
Output Function	NO+NC
Switching frequency	400Hz

Electrical data

Operating Voltage	12...30VDC
No-Load supply current	100mA
Load current	160mA
Leakage current	≤1μA
Output voltage drop	1,6Vdc @ 100mA
Max ripple content	≤ 10%
LED indicators	green: power supply-alignment; red: dark/light status
Time delay before availability	< 300ms
Short-circuit protection	Yes (autoreset)

Reverse Polarity Protection	Yes
Emission	Red (617nm)
Interference to external light	5000lux (fluorescent lamp); 50000lux (sun light)
Impulsive Overvoltage Protection	Yes

Mechanical data

Dimensions	107mm x 20mm x 36mm
Housing material	Aluminim
Weight	100g
Connections	M12 4pin + cable PVC 200mm
Active Head Material	PMMA
Operating temperature	-10°C…+ 55° C (without freeze)

Test/Approvals

Approvals	CE, cULus,UKCA
EMC compatibility	EN 60947-5-2
Shocks and vibrations	IEC EN 60947-5-2 / 7.4
Degree of protection	IP67

Accessories

Supplied Accessories	RL106G reflector + fixing kit (ST151)

Generical Data

Dimensions	107x20x36
Operating Temperature	-10°C…+ 55° C (without freeze)
Mechanical Protection	IP67

CONNECTIONS

Eletrical diagram

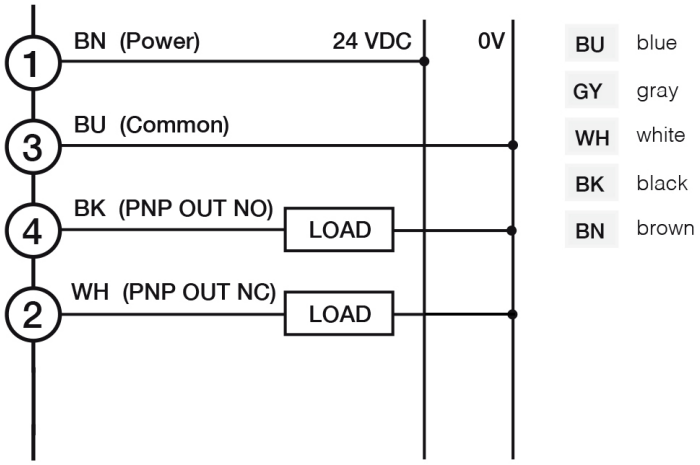

Connector

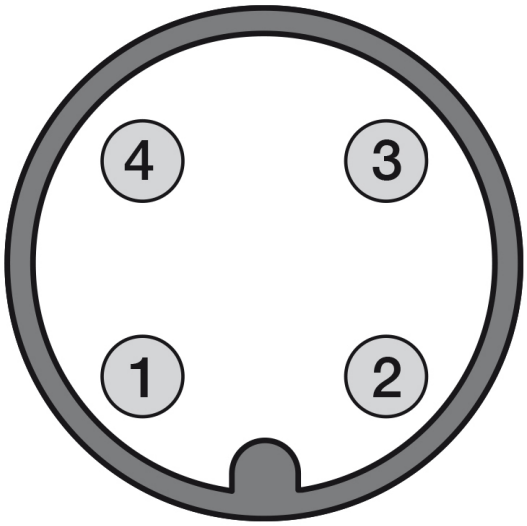

OTHERS

Dimensions

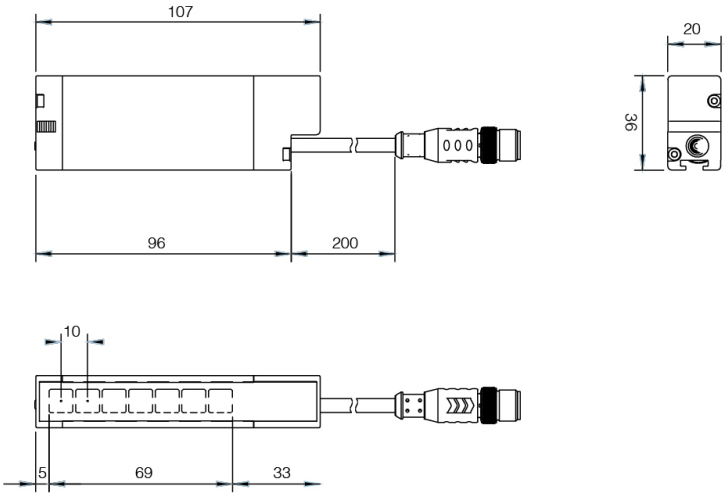

Datasensing S.r.l.
Strada S.Caterina, 235
41122 Modena (MO)
Tel. 059 420411
Fax 059 253973
E-mail
info@datasensing.com

date of printing
25/11/2026
06:31:11