

BX80

BX80S/10-1A

Area Sen, H=70mm-6mm pitch,Emitter
HIGH RESOLUTION CUBIC HOUSING AREA SENSOR

OVERVIEW

- Controlled heightt 70 mm
- Operating distance up to 2 m
- Microprocessor based circuit
- Sensitivity adjustment
- Strong cubic housing
- Special version with metallic enclosure for high-duty use
- Protection degree IP67
- Complete protection against electrical damages

TECHNICAL FEATURES

Detection properties

Nominal sensing distance	depending on the receiver
Thermal drift of Sr	≤10%
Beams space	6mm
controlled height	70mm

minimum detectable object	Depending on the receiver
number of rays	12
Sensitivity adjustment	Yes

Application

Function Principle	Emitter

Outputs

Output type	Emitter
Output Function	Emitter

Electrical data

Operating Voltage	12…24 VDC
No-Load supply current	100mA
Max ripple content	≤ 10%
LED indicators	Green (powerON)
Time delay before availability	500ms
Short-circuit protection	Yes (auto reset)
Reverse Polarity Protection	Yes
Emission	Infrared (880nm)
Interference to external light	1.500 lux max. (incandescent lamp), 4.500 lux max. (sunlight)
Impulsive Overvoltage Protection	Yes

Mechanical data

Dimensions	44mm x 120mm x 20mm
Housing material	PBT
Weight	800 … 820g
Connections	PVC 2m cable
Active Head Material	PC
Tightening torque	25Nm
Operating temperature	-25°C…+50°C (without freeze)
Storage temperature	-40°C…+80°C

Test/Approvals

Approvals	CE cULus
EMC compatibility	IEC 60947-5-2
Shocks and vibrations	IEC EN 60947-5-2
Degree of protection	IP67

Accessories

Supplied Accessories	2 nuts M18x1 - 1 adjustment key - 1 90°angled brackets

Generical Data

Dimensions	45x145x20

Operating Temperature	-25°C…+50°C (without freeze)
Mechanical Protection	IP67

CONNECTIONS

Eletrical diagram

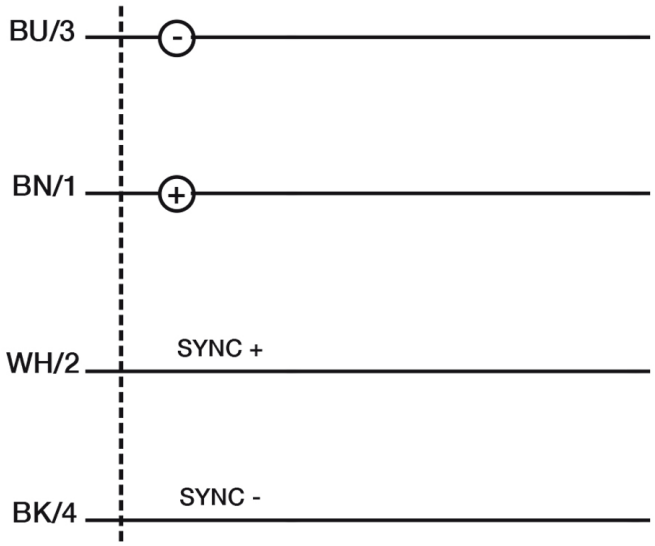

OTHERS

Dimensions

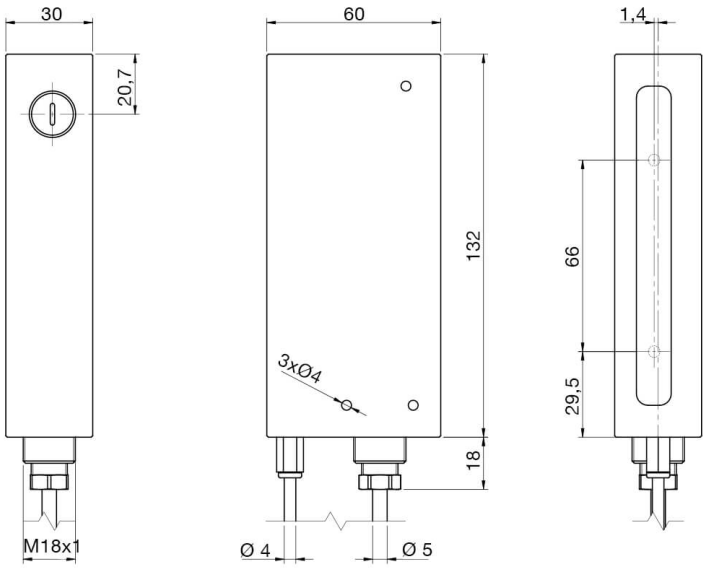

Datasensing S.r.l.
Strada S.Caterina, 235
41122 Modena (MO)
Tel. 059 420411
Fax 059 253973
E-mail
info@datasensing.com

date of printing
24/11/2026
06:30:52