

SH/TH

SH4/R-1KIA

Safety,M18,Receiver,M12 90°,Type 4

PHOTOCELLS TYPE 2 AND TYPE 4

OVERVIEW

- M18 Models 10 m (axial optic) and 5 m (radial optic) operating distance
- M30 models 60 m operating distance
- EN50100 Category 2 and Category 4 compliant
- LED indicators
- Plastic and Metal Housing
- Inputs and Outputs IEC61131-2 compliant and adaptable with any safety module
- To be used together with a Category 2 or Category 4 safety control unit to obtain a safety system EN ISO 13849 compliant

TECHNICAL FEATURES

Detection properties

Nominal sensing distance	10m (ExG=4)
Thermal drift of Sr	≤ 10%
Resolution	Single-beam
controlled height	Single-beam

Effective Aperture Angle	Typical ±1,8°

Application

Function Principle	Receiver
Control unit to be used	SBCR03
Description	M18 Type 4 Safety Photocell Receiver

Safety parameters

Type	Type 4 safety photocell
SIL	3
SILCL	3
PL	e
MTTFd	20 years

Outputs

Output type	Totem-pole
Output Function	To be connectred to SBCR03
Resposnse time for light/dark transition	200µs
Resposnse time for dark/light transition	400µs

Electrical data

Operating Voltage	10 … 30 Vdc
No-Load supply current	≤ 25mA

Load current	≤ 70mA
Output voltage drop	2,5V @ 50mA
Max ripple content	≤ 5 Vpp
LED indicators	Yellow (alignement)

Mechanical data

Dimensions	M18
Housing material	PBT
Connections	M12 plug
Active Head Material	Glass
Operating temperature	-20°C … +55°C
Storage temperature	-40°C … +75°C
Humidity	15% … 95%

Test/Approvals

Approvals	CE, TÜV
Shocks and vibrations	10g - 16ms (according to IEC600068-2-29) 10Hz…55Hz - 1 oct/min - 0,35mm (according to 60068-2-6)
Degree of protection	IP67

Accessories

Supplied Accessories	2 x nuts

Generical Data

Dimensions	M18
Operating Temperature	-20…+55°C (Without freeze)
Humidity	15% … 95%
Mechanical Protection	IP67

UNASSIGNED

Disegno 2D PDF	8,10E-10

CONNECTIONS

Eletrical diagram

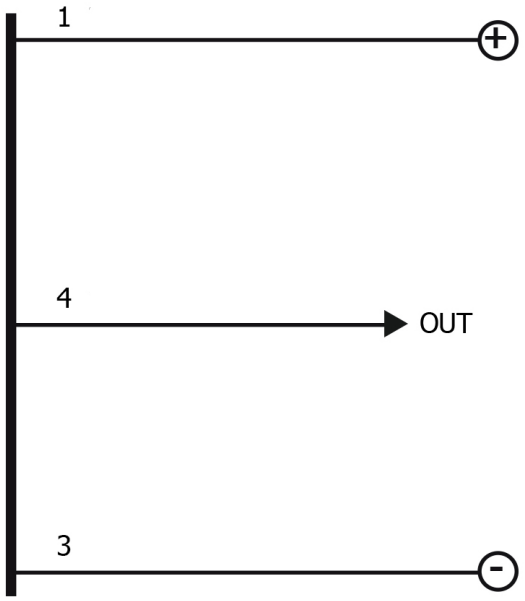

Connector

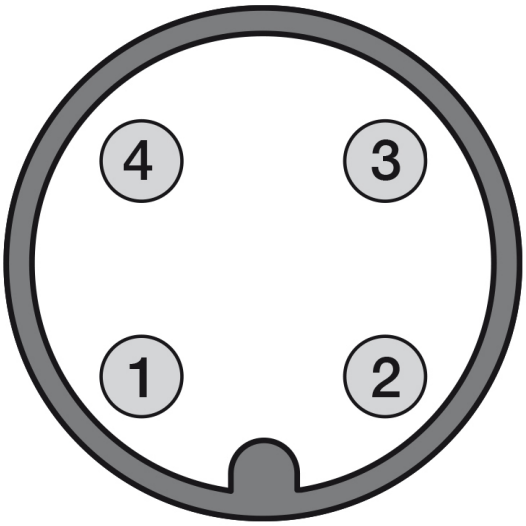

OTHERS

Dimensions

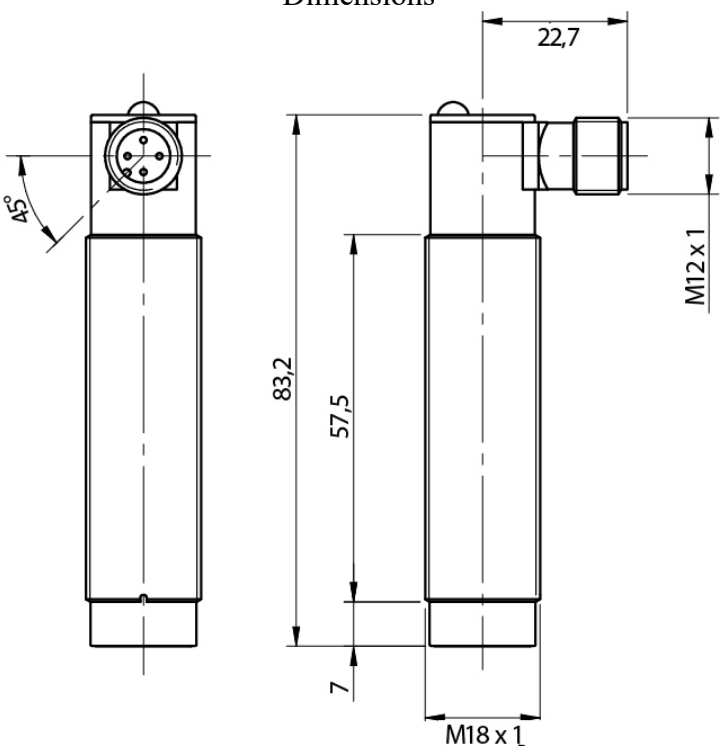

Datasensing S.r.l.
Strada S.Caterina, 235
41122 Modena (MO)

date of printing
24/11/2026
05:02:40

Tel. 059 420411
Fax 059 253973
E-mail
info@datasensing.com