MC00048|00

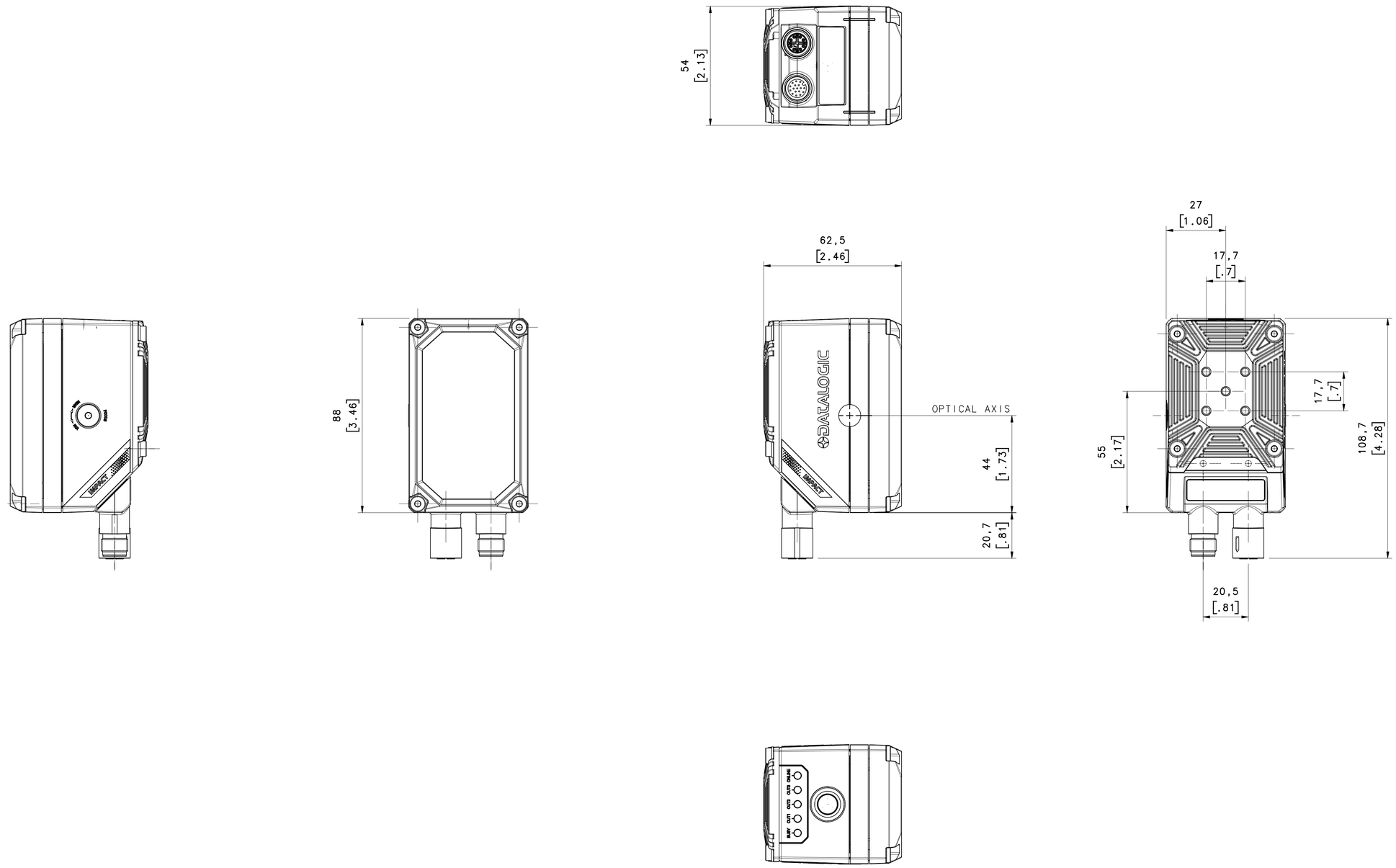

MOD.	REV.	PROPOSAL	DESCRIPTION.	DATE	SIGN

All materials employed have to be selected among RoHS compliant materials: the EC directives to be referred to are 2002/95/EC and correlated subsequent ones.

DATALOGIC WORKMANSHIP AND PACKAGING STANDARDS
- ☒ For Metal Parts last revision issued of GM.SSM.010.SPM. Unless otherwise specified, surfaces shall be category "C"
- ☒ For Plastic, Rubber and Overmold Parts last revision issued of GM.SSM.004.SPP. Unless otherwise specified, surfaces shall be category "C"
- ☒ For Package last revision issued of GM.SSM.002.SPS and GM.SSM.007.SPI.
- ☒ Not applicables

DIMESIONS WITHOUT TOLERANCE DEGREE:
.

PRECISION DEGREE	DIMENSIONAL GROUPS				
	> 0 A 6	> 6 A 30	> 30 A 120	> 120 A 315	> 315 A 999
MEDIUM (m)	± 0,1	± 0,2	± 0,3	± 0,5	± 0,8
PRECISE (f)	± 0,05	± 0,1	± 0,15	± 0,2	± 0,3

NOTE

TREAT. .

MATER. .

DES. BY Giacomazzi M. DATE 04/02/21

SCALE 1:1

APPROVED BY (IF REQUIRED) .

MOLD N° .

CODE .

DWG N° DIM-1021

REV. .

DATALOGIC TM
www.datalogic.com

NAME M320-P2x-CONN-0*

DATALOGIC AND THE DATALOGIC LOGO ARE REGISTERED TRADEMARKS OF DATALOGIC S.P.A. IN MANY COUNTRIES, INCLUDING THE U.S.A. AND THE E.U.
DATALOGIC PROPRIETARY & CONFIDENTIAL INFORMATION