DATALOGIC

Absolute Encoders

AMT58...13x12 CB

CANopen

Ds406 - Device Profile for Encoders

Manuale Istruzioni

Datalogic S.r.l.
Via S. Vitalino 13
40012 Calderara di Reno
Bologna – Italy

© 2014 - 2017 Datalogic S.p.A. e/o le sue consociate ◆ TUTTI I DIRITTI RISERVATI. ◆ Senza con ciò limitare i diritti coperti dal copyright, nessuna parte della presente documentazione può essere riprodotta, memorizzata o introdotta in un sistema di recupero o trasmessa in qualsiasi forma o con qualsiasi mezzo, o per qualsiasi scopo, senza l'espresso consenso scritto di Datalogic S.p.A. e/o delle sue consociate.

Datalogic e il logo Datalogic sono marchi registrati di Datalogic S.p.A. depositati in diversi paesi, tra cui U.S.A. e UE.

Tutti gli altri marchi registrati e brand sono di proprietà dei rispettivi proprietari. Datalogic si riserva il diritto di apportare modifiche e/o miglioramenti senza preavviso.

16/06/17

INDICE

1 - Norme di sicurezza 1
2 - Identificazione 3
3 - Istruzioni di montaggio 4
3.1 Encoder con asse sporgente 4
3.1.1 Fissaggio standard 4
3.1.2 Fissaggio con graffe (codice ST-58-KIT) 4
3.1.3 Fissaggio con campana (codice ST-58-FLNG) 5
3.2 Encoder con asse cavo 6
3.2.1 AMT58-H15 6
4 - Connessioni elettriche 7
4.1 Coperchio encoder 7
4.2 Collegamento messa a terra 8
4.3 Coperchio con pressacavi 8
4.4 Coperchio con connettori M12 9
4.5 Collegamento della calza 9
4.6 Resistenza di terminazione: RT 10
4.7 LED di diagnostica 10
4.9 Indirizzo nodo: DIP B 12
5 - Quick reference 13
5.1 Risoluzione fisica dell’encoder 13
5.1.1. Modifica della risoluzione fisica 13
5.2 Utilizzo con le impostazioni di default 15
6 - Interfaccia CANopen® 16
6.1 File EDS 16
6.2 Funzionamento a stati 16
6.2.1 Stato Inizialization 16
6.2.2 Stato Pre-operational 17
6.2.3 Stato Operational 17
6.2.4 Stato Stopped 17
6.3 Tipi di messaggi 18
6.3.1 COB-ID previsti o riconosciuti 18
6.4 Messaggi NMT 19
6.5 Messaggi di Boot-up 19
PDO1 Cyclic mode: trasmissione ciclica della posizione 20
PDO2 e PDO3 Sync mode: trasmissione sincrona della posizione 20
PDO4 Cyclic mode: trasmissione ciclica della velocità 20
6.7 Messaggi SDO 21
6.7.1 Command 22
6.8 Dizionario oggetti 23
6.8.1 Oggetti standard (DS 301) 23
1000-00 Tipo di dispositivo 23
1001-00 Registro errori 23
1003 Campo errori predefinito 23
1005-00 COB-ID messaggi Sync 23
1008-00 Nome del costruttore 24
1009-00 Versione hardware 24
100A-00 Versione software 24
100C-00 Guard time 24
100D-00 Life time factor 24
1011-01 Parametri di default 25

1015-00 Inhibit time EMCY 26
1018 Informazioni di identificazione 26
1800 Parametri PDO1 26
1801 Parametri PDO2 27
1802 Parametri PDO3 27
1803 Parametri PDO4 28
1A00-01 Mappatura PDO1 28
1A01-01 Mappatura PDO2 28
1A02-01 Mappatura PDO3 28
1A03-01 Mappatura PDO4 28
2104-00 Limit switch min 29
2105-00 Limit switch max 29
3000-00 Velocità trasmissione dati 29
3001-00 Node-ID 31
3005-00 Formato velocità 31
3006-00 Valore della velocità 31
6000-00 Parametri operativi 32
Direzione di conteggio 32
Funzione di scaling 32
6001-00 Informazioni per giro 33
6002-00 Risoluzione totale 33
6003-00 Valore di preset 34
6200-00 Cyclic timer 35
6500-00 Stato operativo 35
Direzione conteggio 35
Funzione di scaling 35
Limit switch min 36
Limit switch max 36
Stato operativo attuale 36
6501-00 Informazioni per giro fisiche 36
6502-00 Numero di giri fisico 36
6504-00 Allarmi supportati 36
6506-00 Warning supportati 36
6507-00 Versione profilo e software 36
6508-00 Tempo di lavoro dispositivo 37
6509-00 Valore di offset 37
650A-01 Valore di offset del costruttore 37
650B-00 Numero di serie 37
6.9 Messaggi di avvertenza 38
6.10 Messaggi Emergenza 38
7 - Programmazione 40

Indice analitico

1
1000-00 Tipo di dispositivo 23
1001-00 Registro errori 23
1003 Campo errori predefinito 23
1005-00 COB-ID messaggi Sync 23
1008-00 Nome del costruttore 24
1009-00 Versione hardware 24
100A-00 Versione software 24
100C-00 Guard time 24
100D-00 Life time factor 24
1010-01 Salvataggio parametri 25
1011-01 Parametri di default 25
1014-00 COB-ID EMCY 26
1015-00 Inhibit time EMCY 26
1018 Informazioni di identificazione 26
1800 Parametri PDO1 26
1801 Parametri PDO2 27
1802 Parametri PDO3 27
1803 Parametri PDO4 28
1A00-01 Mappatura PDO1 28
1A01-01 Mappatura PDO2 28
1A02-01 Mappatura PDO3 28
1A03-01 Mappatura PDO4 28
2
2104-00 Limit switch min 29
2105-00 Limit switch max 29
3
3000-00 Velocità trasmissione dati 29
3001-00 Node-ID 31
3005-00 Formato velocità 31
3006-00 Valore della velocità 31
6
6000-00 Parametri operativi 32
6001-00 Informazioni per giro 33
6002-00 Risoluzione totale 33
6003-00 Valore di preset 34
6004-00 Valore di posizione 35
6200-00 Cyclic timer 35
6500-00 Stato operativo 35
6501-00 Informazioni per giro fisiche 36
6502-00 Numero di giri fisico 36
6504-00 Allarmi supportati 36
6506-00 Warning supportati 36
6507-00 Versione profilo e software 36
6508-00 Tempo di lavoro dispositivo 37
6509-00 Valore di offset 37
650A-01 Valore di offset del costruttore 37
650B-00 Numero di serie 37
C
COB-ID usato da PDO1 26
COB-ID usato da PDO2 27
COB-ID usato da PDO3 27
COB-ID usato da PDO4 28
Codice prodotto 26
D
Direzione conteggio 35
Direzione di conteggio 32
E
Errore memoria flash 38
Errore Node guarding 38
F
Funzione di scaling 32; 35
I
Identificativo del costruttore 26
Inizialization 17
L
Limit switch max 36
Limit switch min 36
N
Numero errori presenti 23
Numero revisione 26
O
Operational 17
P
Precedenti errori 23
Pre-operational 17
S
Stato operativo attuale 36
Stopped 17
T
Tipo di trasmissione 26; 27; 28
U
Ultimo errore verificatosi 23

Convenzioni grafiche e iconografiche

Per rendere più agevole la lettura di questo testo sono state adottate alcune convenzioni grafiche e iconografiche. In particolare:

- i parametri e gli oggetti sia propri dell'interfaccia che del dispositivo Datalogic sono evidenziati in ARANCIONE;
- gli allarmi sono evidenziati in ROSSO;
- gli stati sono evidenziati in FUCSIA.

Scorrendo il testo sarà inoltre possibile imbattersi in alcune icone che evidenziano porzioni di testo di particolare interesse o rilevanza. Talora esse possono contenere prescrizioni di sicurezza atte a richiamare l'attenzione sui rischi potenziali legati all'utilizzo del dispositivo. Si raccomanda di seguire attentamente le prescrizioni elencate nel presente manuale al fine di salvaguardare la sicurezza dell'utilizzatore oltre che le performance del dispositivo. I simboli utilizzati nel presente manuale sono i seguenti:

	Questa icona, accompagnata dal termine ATTENZIONE, evidenzia le porzioni di testo che contengono informazioni della massima importanza per l'operatore concernenti l'uso corretto e sicuro del dispositivo. Le istruzioni accompagnate da questo simbolo devono essere seguite scrupolosamente dall'operatore. La loro mancata osservanza può generare malfunzionamenti e danni sia al dispositivo che alla macchina sulla quale il dispositivo è installato e procurare lesioni anche gravi agli operatori al lavoro in prossimità.
	Questa icona, accompagnata dal termine NOTA, evidenzia le porzioni di testo che contengono notazioni importanti ai fini di un uso corretto e performante del dispositivo. Le istruzioni accompagnate da questo simbolo devono essere tenute bene in considerazione da parte dell'operatore. La loro mancata osservanza può procurare l'esecuzione di procedure errate di settaggio da parte dell'utilizzatore e conseguentemente un funzionamento errato o inadeguato del dispositivo.
	Questa icona evidenzia le porzioni di testo che contengono suggerimenti utili per agevolare l'operatore nel settaggio e l'ottimizzazione del dispositivo. Talora il simbolo è accompagnato dal termine ESEMPIO quando le istruzioni di impostazione dei parametri siano seguite da esemplificazioni che ne chiarifichino l'utilizzo.

Informazioni preliminari

Questo manuale ha lo scopo di descrivere le caratteristiche tecniche, l'installazione e l'utilizzo degli encoder CANopen della serie AMT58.
Per ulteriori informazioni si rimanda alla pagina di catalogo del prodotto.

Per una più agevole consultazione questo manuale è diviso in due parti.
Nella prima parte sono fornite le informazioni generali riguardanti il trasduttore comprendenti le norme di sicurezza, le istruzioni di montaggio meccanico e le prescrizioni relative alle connessioni elettriche, nonché ulteriori informazioni sul funzionamento e la corretta messa a punto del dispositivo.
Nella seconda parte, intitolata Interfaccia CANopen, sono fornite tutte le informazioni sia generali che specifiche relative all'interfaccia CANopen. In questa sezione sono descritte le caratteristiche dell'interfaccia e gli oggetti CANopen che l'unità implementa.

1 - Norme di sicurezza

Sicurezza

- Durante l'installazione e l'utilizzo del dispositivo osservare le norme di prevenzione e sicurezza sul lavoro previste nel proprio paese;
- l'installazione e le operazioni di manutenzione devono essere eseguite da personale qualificato, in assenza di tensione e parti meccaniche in movimento;
- utilizzare il dispositivo esclusivamente per la funzione per cui è stato costruito: ogni altro utilizzo potrebbe risultare pericoloso per l'utilizzatore;
- alte correnti, tensioni e parti in movimento possono causare lesioni serie o fatali;
- il mancato rispetto delle norme di sicurezza o delle avvertenze specificate in questo manuale è considerato una violazione delle norme di sicurezza standard previste dal costruttore o richieste dall'uso per cui lo strumento è destinato;
- Datalogic Automation S.r.l. non si assume alcuna responsabilità per eventuali danni o lesioni derivanti dall'inosservanza delle norme di sicurezza da parte dell'utilizzatore.

Avvertenze elettriche

- Effettuare le connessioni elettriche esclusivamente in assenza di tensione;
- rispettare le connessioni riportate nella sezione sezione "4 - Connessioni elettriche";
- in conformità alla normativa 2014/30/EU sulla compatibilità elettromagnetica rispettare le seguenti precauzioni:
  - prima di maneggiare e installare il dispositivo eliminare la presenza di carica elettrostatica dal proprio corpo e dagli utensili che verranno in contatto con il dispositivo;
  - alimentare il dispositivo con tensione stabilizzata e priva di disturbi; se necessario, installare appositi filtri EMC all'ingresso dell'alimentazione;
  - utilizzare sempre cavi schermati e possibilmente "twistati";
  - non usare cavi più lunghi del necessario;
  - evitare di far passare il cavo dei segnali del dispositivo vicino a cavi di potenza;
  - installare il dispositivo il più lontano possibile da possibili fonti di interferenza o schermarlo in maniera efficace;
  - per garantire un funzionamento corretto del dispositivo, evitare l'utilizzo di apparecchiature con forte carica magnetica in prossimità dell'unità;
  - collegare la calza del cavo e/o la custodia del connettore a un buon punto di terra; assicurarsi che il punto di terra sia privo di disturbi. Il collegamento a terra può essere effettuato sul lato dispositivo e/o sul lato utilizzatore; è compito dell'utilizzatore valutare la soluzione migliore da adottare per minimizzare i disturbi.

Avvertenze meccaniche

- Montare il dispositivo rispettando rigorosamente le istruzioni riportate nella sezione “3 – Istruzioni di montaggio”;
- effettuare il montaggio meccanico esclusivamente in assenza di parti meccaniche in movimento;
- non disassemblare il dispositivo;
- non eseguire lavorazioni meccaniche sul dispositivo;
- dispositivo elettronico delicato: maneggiare con cura; evitare urti o forti sollecitazioni sia all’asse che al corpo del dispositivo;
- utilizzare il dispositivo in accordo con le caratteristiche ambientali previste dal costruttore;
- encoder con asse sporgente: utilizzare giunti elastici per collegare encoder e motore; rispettare le tolleranze di allineamento ammesse dal giunto elastico;
- encoder con asse cavo: l'encoder può essere montato direttamente su un albero che rispetti le caratteristiche definite nel foglio d'ordine e fissato mediante il collare e, ove previsto, un pin antirotazione.

2 - Identificazione

Il dispositivo è identificato mediante un codice di ordinazione e un numero di serie stampati sull'etichetta applicata al dispositivo stesso; i dati sono ripetuti anche nei documenti di trasporto che lo accompagnano.

Citare sempre il codice di ordinazione e il numero di serie quando si contatta Datalogic Automation s.r.l. per l'acquisto di un ricambio o nella necessità di assistenza tecnica.
Per ogni informazione sulle caratteristiche tecniche del dispositivo fare riferimento al catalogo del prodotto.

3 - Istruzioni di montaggio

ATTENZIONE
L'installazione e le operazioni di manutenzione devono essere eseguite da personale qualificato, in assenza di tensione e componenti meccaniche in movimento.

3.1 Encoder con asse sporgente

- Fissare il giunto elastico 1 all'encoder;
- fissare l'encoder alla flangia di fissaggio 2 o alla campana utilizzando le viti 3;
- fissare la flangia 2 al supporto o la campana al motore;
- fissare il giunto elastico 1 al motore;
- assicurarsi che le tolleranze di allineamento ammesse dal giunto elastico 1 siano rispettate.

3.1.1 Fissaggio standard

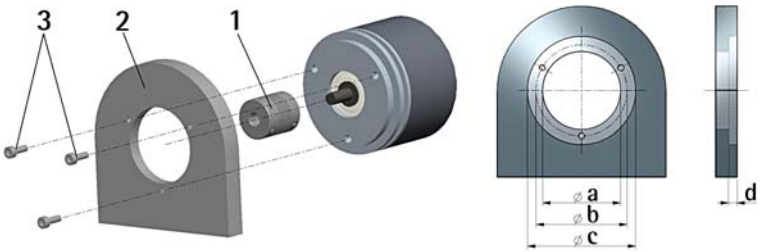

	a [mm]	b [mm]	c [mm]	d [mm]
AMT58	36 H7	48	-	-

3.1.2 Fissaggio con graffe (codice ST-58-KIT)

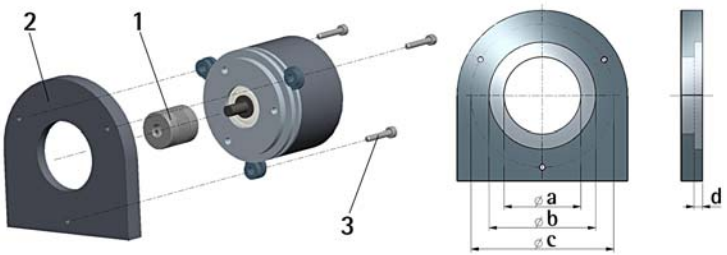

	a [mm]	b [mm]	c [mm]	d [mm]
AMT58	36 H7	-	67	-

3.1.3 Fissaggio con flangia (codice ST-58-FLNG)

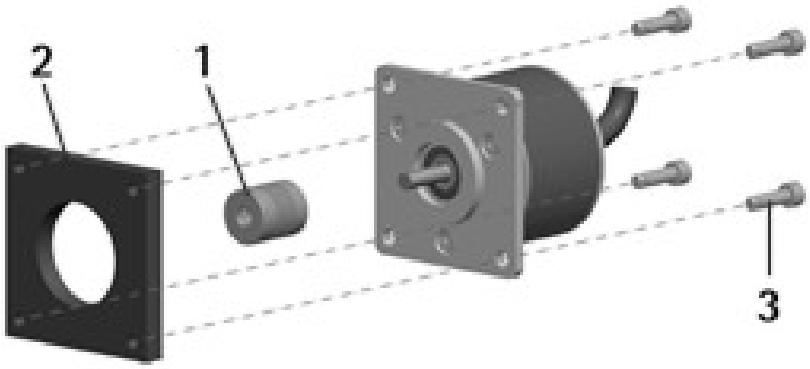

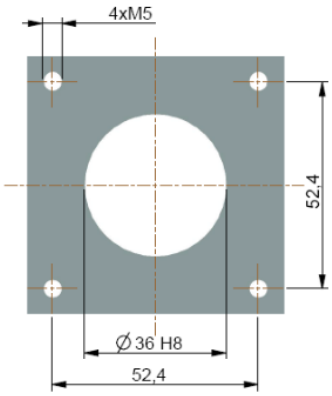

3.2 Encoder con asse cavo

3.2.1 AMT58-H15

- Inserire l'encoder sull'albero del motore utilizzando la boccola di riduzione 8 (se fornita). Evitare sforzi sull'albero encoder;
- fissare la molla di fissaggio 4 sul retro del motore utilizzando due viti M3 a testa cilindrica 5;
- fissare il collare 3 dell'albero encoder (fissare la vite 3 con frenafiletto).

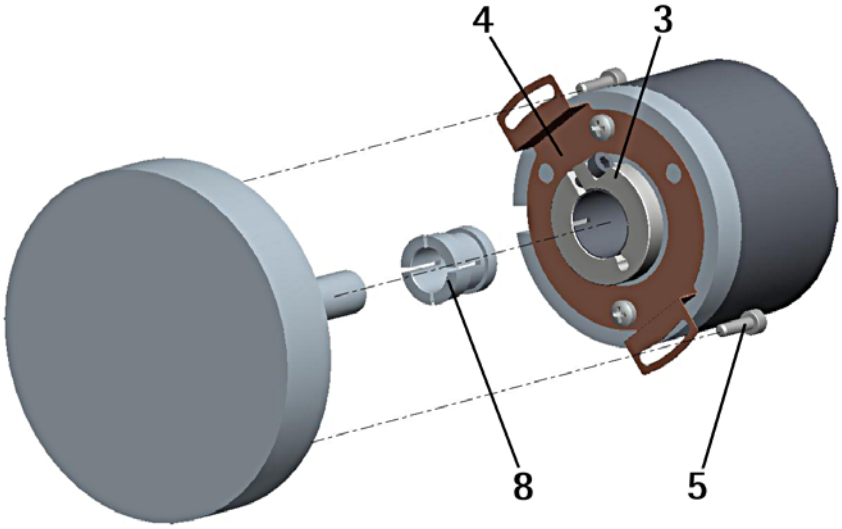

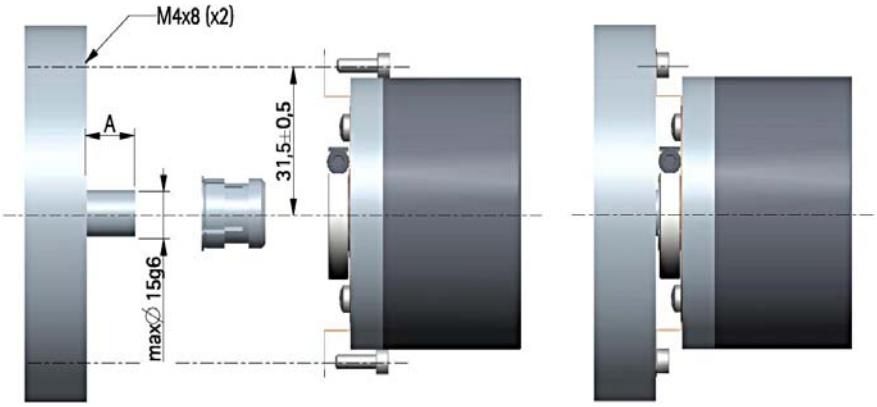

4 - Connessioni elettriche

ATTENZIONE
Ogni operazione deve essere eseguita con dispositivo non alimentato!

4.1 Coperchio encoder

ATTENZIONE
Non rimuovere o connettere il coperchio dell'encoder con tensione di alimentazione inserita. Alcuni componenti interni potrebbero danneggiarsi.

Il coperchio dell'encoder ospita i morsetti per il collegamento dell'alimentazione e degli ingressi e uscite bus (coperchio con pressacavi CC-CB), nonché i dip-switch di impostazione del baud rate e dell'indirizzo nodo e attivazione della resistenza di terminazione. Per accedere a questi elementi è pertanto necessario rimuovere il coperchio.

NOTA
Eseguire questa operazione con estrema prudenza per non danneggiare i componenti interni.

Per togliere il coperchio svitare le due viti di fissaggio 1.
Prestare la massima attenzione alla disconnessione del connettore interno.
Avere cura di ripristinare il coperchio al termine delle operazioni.
Ricollegare con cura il connettore interno.
Fissare le viti 1 con una coppia di serraggio di 2,5 Nm.

ATTENZIONE
Prima di ripristinare il coperchio è fondamentale assicurarsi che il corpo dell'encoder e il coperchio siano allo stesso potenziale!

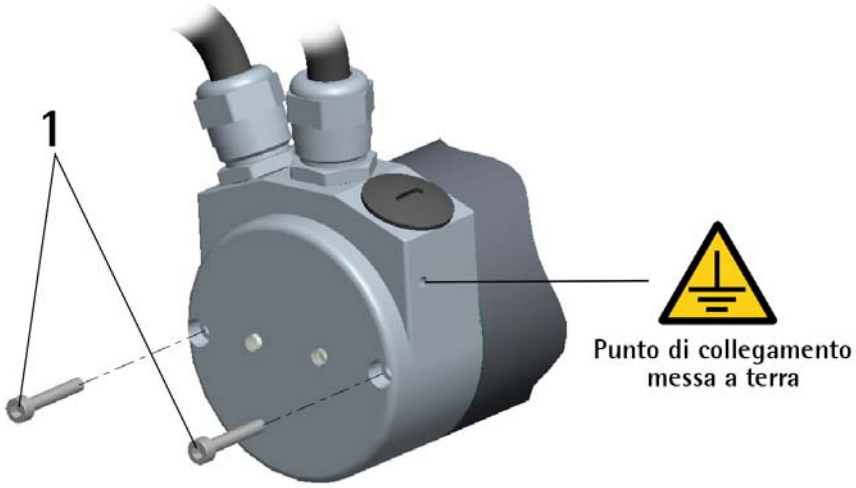

4.2 Collegamento messa a terra

Collegare la calza del cavo e/o la custodia del connettore e/o il corpo del dispositivo a un buon punto di terra; assicurarsi che il punto di terra sia privo di disturbi. Il collegamento a terra può essere effettuato sul lato dispositivo e/o sul lato utilizzatore; è compito dell'utilizzatore valutare la soluzione migliore da adottare per minimizzare i disturbi.
Si consiglia di effettuare il collegamento a terra il più vicino possibile all'encoder. Per la messa a terra si consiglia di utilizzare il punto di collegamento previsto sul coperchio del dispositivo (Figura sopra, utilizzare 1 vite TCEI M3 x 6 a testa cilindrica con 2 rondelle zigrinate).

4.3 Coperchio con pressacavi

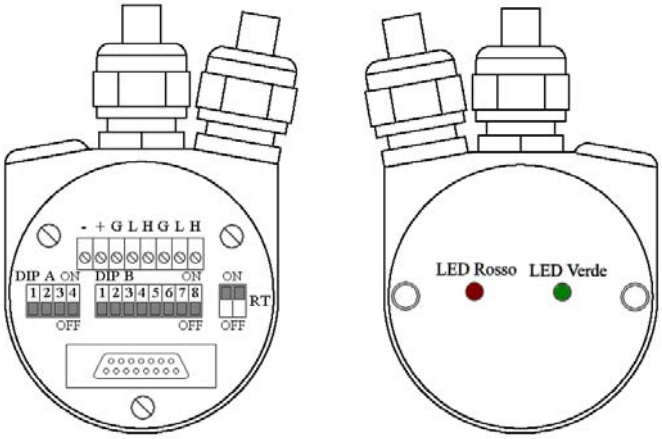

Il coperchio dispone di due pressacavi PG9, per l'ingresso bus, uscita bus e alimentazione. Ciascun cavo si viene a trovare allineato con i relativi morsetti. Per il collegamento del bus si raccomanda di usare l'appropriato cavo certificato CANbus, con sezione massima del conduttore: Ø 1,5 mm.

Morsetto	Descrizione
-	0 VDC Alimentazione
+	+10VDC +30VDC Alimentazione
G	CAN GND [1]
L	CAN Low
H	CAN High
PG	CAN Shield [2]

[1] *Riferimento di tensione 0VDC del segnale CAN. Non è collegato a 0VDC dell'alimentazione.*
[2] *Collegare la calza del cavo al pressacavo.*

4.4 Coperchio con connettori M12

Il coperchio dispone di due connettori M12 con pin-out secondo lo standard CANopen®. Pertanto è possibile utilizzare cavi CAN standard disponibili in commercio.

connettore M12
codifica A
(vista lato contatti)

maschio (BUS IN) femmina (BUS OUT)

M12	Descrizione
Case	CAN Shield
1 [1]	
2	+10VDC +30VDC Alimentazione
3	0 VDC Alimentazione
4	CAN High
5	CAN Low

[1] *CAN Shield è collegato anche al piedino 1 per permettere il collegamento della calza anche nel caso di connettore volante con case plastico.*

4.5 Collegamento della calza

Districare la calza 1 e tagliarla alla giusta misura; quindi piegarla sul particolare 2; infine posizionare la ghiera 3 assicurandosi che la calza 1 e la ghiera 3 siano adeguatamente in contatto.

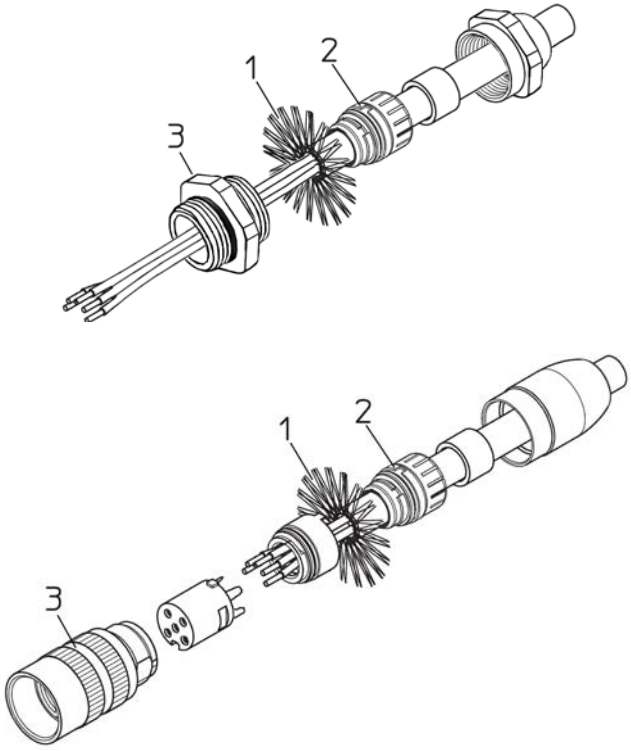

4.6 Resistenza di terminazione: RT

ATTENZIONE
Questa operazione deve essere eseguita con dispositivo non alimentato!

All'interno del coperchio CANopen® è situata una resistenza che deve essere utilizzata come linea di terminazione sull'ultimo dispositivo. Per attivarla si agisce sullo switch RT.

RT	Descrizione
1 = 2 = ON	Attiva: se il dispositivo è l'ultimo della linea
1 = 2 = OFF	Disattiva: se il dispositivo non è l'ultimo della linea

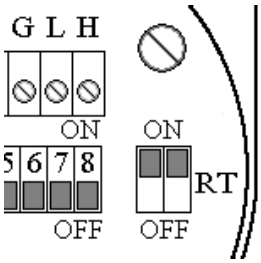

4.7 LED di diagnostica

Due LED installati nella parte posteriore dell'encoder mostrano la condizione di funzionamento dell'interfaccia CANopen® secondo la seguente tabella:

LED VERDE	Descrizione
ON	Encoder in stato Operational
Singolo flash	Encoder in stato Stopped
Lampeggiante	Encoder in stato Pre-operational

LED ROSSO	Descrizione
ON	Bus off
Doppio flash	Errore Node guarding error
Singolo flash	Massimo numero avvertenze raggiunto
Lampeggiante	Errore generico o Errore memoria flash
OFF	Nessun errore

Durante l'inizializzazione dello strumento è eseguito un test di funzionamento. Entrambi gli indicatori led sono accesi.

4.8 Velocità di trasmissione dati: DIP A

ATTENZIONE
Questa impostazione deve essere eseguita con dispositivo non alimentato!

La velocità di trasmissione dati può essere impostata sia in modo hardware che software.
Se il bit 4 di DIP A è “OFF” la velocità di trasmissione dati è definita dall’oggetto **3000-00 Velocità trasmissione dati** del “Dizionario Oggetti”, modificabile attraverso messaggi SDO.
Se il bit 4 di DIP A è “ON” la velocità di trasmissione dati è definita da DIP A.

DIP A:

Con dispositivo spento impostare il valore binario della velocità di trasmissione dati considerando che ON=1, OFF=0

bit	1 LSB	2	3 MSB	4
	2^0	2^1	2^2	ON/OFF

Tabella dei valori di baud rate disponibili:

Valore decimale	Valore binario	Baud rate
0	000	20 Kbit/s
1	001	50 Kbit/s
2	010	100 Kbit/s
3	011	125 Kbit/s
4	100	250 Kbit/s
5	101	500 Kbit/s (default)
6	110	800 Kbit/s
7	111	1000 Kbit/s

Esempi

Impostare il baud rate a 250Kbit/s:
$4_{10} = 100_2$ (valore binario, vedi tabella precedente)

bit	1	2	3	4
	2^0	2^1	2^2	2^3
	OFF	OFF	ON	ON

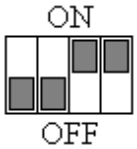

Impostare il baud rate a 500Kbit/s:
$5_{10} = 101_2$ (valore binario, vedi tabella precedente)

bit	1	2	3	4
	2^0	2^1	2^2	2^3
	ON	OFF	ON	ON

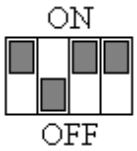

4.9 Indirizzo nodo: DIP B

ATTENZIONE
Questa impostazione deve essere eseguita con dispositivo non alimentato!

L'indirizzo del nodo può essere impostato sia in modo hardware che software. L'indirizzo deve avere un valore compreso tra 1 e 127. L'indirizzo di default è 1.
Se tutti i bit di DIP B sono "OFF" (indirizzo 0) l'indirizzo è definito dall'oggetto **3001-00 Node-ID** del "Dizionario Oggetti", modificabile attraverso messaggi SDO.
Se almeno 1 bit di DIP B è "ON" l'indirizzo è definito da DIP B.

DIP B:

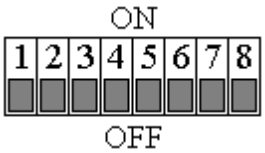

Con dispositivo spento, impostare il valore binario dell'indirizzo del nodo considerando che ON=1, OFF=0

bit	1 LSB	2	3	4	5	6	7 MSB	8 non usato
	2^0	2^1	2^2	2^3	2^4	2^5	2^6	

Esempi

Impostare l'indirizzo 25:
25_{10} = 0001 1001_2 (valore binario)

bit	1	2	3	4	5	6	7	8
	2^0	2^1	2^2	2^3	2^4	2^5	2^6	
	ON	OFF	OFF	ON	ON	OFF	OFF	OFF

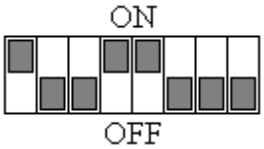

Impostare l'indirizzo 55:
55_{10} = 0011 0111_2 (valore binario)

bit	1	2	3	4	5	6	7	8
	2^0	2^1	2^2	2^3	2^4	2^5	2^6	
	ON	ON	ON	OFF	ON	ON	OFF	OFF

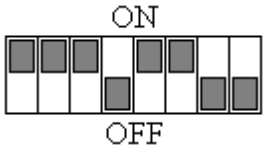

ATTENZIONE
Nel caso in cui il baud rate e l'indirizzo del nodo siano impostati in modalità software, in fase di installazione di un encoder il master dovrà sincronizzarsi con la velocità di comunicazione del dispositivo (scansione del baud rate); una volta instaurata una comunicazione, impostare la velocità e l'indirizzo nodo desiderati (oggetti **3000-00 Velocità trasmissione dati** e **3001-00 Node-ID**), eseguire un **Reset node** e poi salvare i parametri (oggetto **1010-01 Salvataggio parametri**).Per evitare conflitti con altri nodi, questa operazione deve essere eseguita con un solo slave collegato alla rete.

5 - Quick reference

5.1 Risoluzione fisica dell'encoder

ATTENZIONE
E' importante verificare che la risoluzione fisica impostata nei parametri corrisponda a quella dell'encoder (si vedano i codici di ordinazione in basso).
L'utente potrebbe avere impostazioni di risoluzione diverse se l'encoder e il coperchio di connessione sono stati forniti in momenti diversi.

Esempi

AMT58 12/4096 — **6501-00 Informazioni per giro fisiche** = 4096, **6502-00 Numero di giri fisico** = 4096.

AMT58 13/4096 — **6501-00 Informazioni per giro fisiche** = 8192, **6502-00 Numero di giri fisico** = 4096.

Il parametro **6501-00 Informazioni per giro fisiche** è descritto a pagina 40.
Il parametro **6502-00 Numero di giri fisico** è descritto a pagina 36.
Nel caso in cui la risoluzione fisica non corrisponda al codice di ordinazione (vedi etichetta encoder) è necessario effettuare la procedura di **modifica della risoluzione fisica** (alcuni esempi per la lettura della risoluzione fisica sono riportati al paragrafo "5.2 Utilizzo con le impostazioni di default").

Si osservi che i parametri **6001-00 Informazioni per giro** e **6002-00 Risoluzione totale** sono relativi alla funzione di scaling, ma il corretto funzionamento è garantito solo se la risoluzione fisica è impostata correttamente.

5.1.1. Modifica della risoluzione fisica

ID = indirizzo del nodo

Step 1 - Accesso alla configurazione fisica (oggetto 3002h)

NOTA
Per evitare accessi involontari, questo oggetto non compare nel file .EDS

Master → Encoder

COB-ID	Cmd	Index		Sub	Process data			
600+ID	23	02	30	00	41	4B	49	4C

Encoder → Master

COB-ID	Cmd	Index		Sub	Process data			
580+ID	60	02	30	00	00	00	00	00

Step 2 - Modifica oggetto 6501-00 Informazioni per giro fisiche
Si veda la tabella delle risoluzioni in basso nella pagina per B0, B1, B2, B3

Master → Encoder

COB-ID	Cmd	Index		Sub	Process data			
600+ID	23	01	65	00	B0	B1	B2	B3

Encoder → Master

COB-ID	Cmd	Index		Sub	Process data			
580+ID	60	01	65	00	00	00	00	00

Step 3 - Modifica oggetto **6502-00 Numero di giri fisico**
Si veda la tabella delle risoluzioni in basso nella pagina per B4, B5, B6, B7

Master → Encoder

COB-ID	Cmd	Index		Sub	Process data			
600+ID	23	02	65	00	B4	B5	B6	B7

Encoder → Master

COB-ID	Cmd	Index		Sub	Process data			
580+ID	60	02	65	00	00	00	00	00

Step 4 – Eseguire comando Reset node

Master → Encoder

COB-ID	Cmd	Slave ID
000	81	ID

Step 5 – Memorizzazione parametri (oggetto **1010-01 Salvataggio parametri**)

Master → Encoder

COB-ID	Cmd	Index		Sub	Process data			
600+ID	23	10	10	01	73	61	76	65

Encoder → Master

COB-ID	Cmd	Index		Sub	Process data			
580+ID	60	10	10	01	00	00	00	00

Tabella risoluzioni

Modello encoder	info/giro				n°giri			
	B0	B1	B2	B3	B4	B5	B6	B7
AMT58 12/4096	00	10	00	00	00	10	00	00
AMT58 13/4096	00	20	00	00	00	10	00	00

5.2 Utilizzo con le impostazioni di default

Grazie alle sole impostazioni di default, è possibile accendere lo strumento e utilizzarlo per leggere la posizione.
I passi essenziali da eseguire sono i seguenti:

- leggere la risoluzione del dispositivo;
- impostare il dispositivo nella modalità Operational;
- leggere il valore di posizione (in modalità ciclica e/o sincrona).

La velocità di comunicazione e l'indirizzo nodo di default sono:
Baud rate = 500 Kbit/s
Node-ID = 1

Lettura informazioni per giro: 6501-00 Informazioni per giro fisiche

Master → Encoder

COB-ID	Cmd	Index		Sub	Process data			
601	40	01	65	00	-	-	-	-

Encoder → Master

COB-ID	Cmd	Index		Sub	Process data			
581	43	01	65	01	A0	A1	A2	A3

Info/giro = ((A3<<24) | (A2<<16) | (A1<<8) | A0)

Lettura numero di giri: 6502-00 Numero di giri fisico

Master → Encoder

COB-ID	Cmd	Index		Sub	Process data			
601	40	02	65	00	-	-	-	-

Encoder → Master

COB-ID	Cmd	Index		Sub	Process data			
581	43	02	65	01	B0	B1	B2	B3

Numero giri=((B3<<24) | (B2<<16) | (B1<<8) | B0)

Impostazione 6200-00 Cyclic timer (100 ms = 64h)

Master → Encoder

COB-ID	Cmd	Index		Sub	Process data			
600+ID	2B	00	62	00	64	00	-	-

Encoder → Master

COB-ID	Cmd	Index		Sub	Process data			
580+ID	60	00	62	00	00	00	-	-

Modalità Operational

Master → Encoder

COB-ID	Cmd	Nodo
000	01	01

Lettura della posizione ogni 100 ms

Encoder → Master

COB-ID	Byte 0	Byte 1	Byte 2	Byte 3
181	Low	…	…	High

6 - Interfaccia CANopen®

Gli encoder Datalogic sono sempre dispositivi slave e supportano il “Device profile for encoders”, Classe 2.
Per ogni specifica omessa riferirsi ai documenti “CiA Draft Standard 301” e “CiA Draft Standard 406” disponibili sul sito www.can-cia.org.

6.1 File EDS

Gli encoder CANopen® sono forniti con un loro file EDS **AMT58-xxx-13x12-CB** (si veda il supporto informatico fornito con l'apparecchiatura oppure all'indirizzo www.datalogic.com).
Il file EDS deve essere installato sul dispositivo master CANopen®.

6.2 Funzionamento a stati

I dispositivi CANopen® prevedono un funzionamento a stati, il passaggio da uno stato all’altro si effettua tramite l’invio al dispositivo di specifici messaggi NMT. Il diagramma degli stati è il seguente:

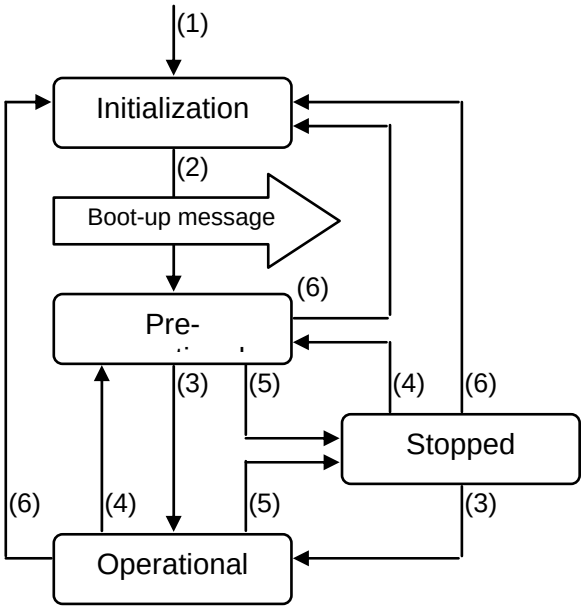

(1)	Accensione dispositivo
(2)	Inizializzazione dispositivo conclusa, invio automatico del messaggio di boot-up
(3)	Messaggio NMT: Start remote node
(4)	Messaggio NMT: Enter pre-operational
(5)	Messaggio NMT: Stop remote node
(6)	Messaggio NMT: Reset node o Reset communication

6.2.1 Stato Inizialization

E' il primo stato dopo l'accensione del dispositivo o dopo la ricezione di un comando Reset node. In questa fase il dispositivo si inizializza e vengono caricati i parametri salvati in EPROM.
Alla fine dell'inizializzazione il dispositivo invia un messaggio di "boot-up" e passa automaticamente allo stato Pre-operational.

6.2.2 Stato Pre-operational

In questo stato è possibile comunicare con lo slave mediante messaggi SDO, grazie ai quali è possibile impostare i parametri di funzionamento del dispositivo. Il nodo slave non è in grado di effettuare comunicazioni con messaggi PDO.
Per portare il dispositivo allo stato Operational il master deve inviare un comando Avvia nodo remoto (Start remote node) mediante un messaggio NMT.

6.2.3 Stato Operational

In questo stato lo slave è operativo, utilizza i valori dei parametri impostati nel "Dizionario Oggetti" e può inviare i valori di processo tramite messaggi PDO. E' possibile comunicare mediante messaggi SDO. Per portare il dispositivo allo stato Pre-operational il master deve inviare un comando Modalità pre-operativa (Enter pre-operational) mediante un messaggio NMT.

6.2.4 Stato Stopped

In questo stato lo slave è forzato a interrompere la comunicazione con il master (a eccezione del "Node guarding", se attivo).
Non è possibile comunicare mediante messaggi PDO e SDO.
Per portare il dispositivo alo stato Pre-operational o Operational il master deve inviare un messaggio NMT specifico.

6.3 Tipi di messaggi

Il modello CANopen® prevede quattro tipi di messaggi di comunicazione tra dispositivi:

- Messaggi amministrativi NMT: messaggi utilizzati dal master per la gestione dei nodi e della rete.
- Process Data Object PDO: messaggi utilizzati per trasmettere valori di processo in "real time".
- Service Data Object SDO: messaggi utilizzati per accedere al "Dizionario Oggetti" di un dispositivo, per leggere o modificare i parametri in esso contenuti.
- Special Function Object:
  - SYNC: messaggio di sincronismo utilizzato dal master per abilitare gli slave alla trasmissione dei valori di processo (quota e velocità encoder).
  - Emergency: messaggi di notifica errori.
  - Nodeguard: utilizzato per conoscere lo stato di un dispositivo.

Uso dei messaggi per ogni stato di funzionamento:

	Inizializ.	Pre-oper.	Operat.	Stopped
NMT		X	X	X
PDO			X	
SDO		X	X	
Sync			X	
Emerg		X	X	
Boot-up	X			
Nodeg.		X	X	X

6.3.1 COB-ID previsti o riconosciuti

trasmissione Master → Slave		
Tipo di COB (Object)	Codice funzione (binario)	COB-ID (hex)
NMT	0000	000
SYNC	0001	080

trasmissione peer-to-peer tra nodi		
EMERGENCY	0001	081 - 0FF
PDO 1 (tx)	0011	181 - 1FF
PDO 2 (tx)	0101	281 - 2FF
PDO 3 (tx)	0111	381 - 3FF
PDO 4 (tx)	1001	481 - 4FF
SDO (tx)	1011	581 - 5FF
SDO (rx)	1100	601 - 67F
Nodeguard.	1110	701 - 77F
Boot-up.	1110	701 - 77F

Il "tipo di COB" è considerato trasmesso (tx) o ricevuto (rx) dal punto di vista del nodo Slave.

6.4 Messaggi NMT

Struttura messaggi NMT:

COB-ID (11 bit)	
Cod.Funz	Node ID
0000	0

2 CAN Data Bytes	
Command	Slave ID
Funz. NMT	Slave ID

Per spedire un messaggio NMT a tutti gli slave impostare: Slave ID = 00h.

Command	Funzione NMT	Stato del nodo
01 hex	Start nodo remoto	Operational
02 hex	Stop nodo remoto	Stopped
80 hex	Modalità pre-operativa	Pre-operational
81 hex	Reset nodo	Pre-operational
82 hex	Reset comunicazione	Pre-operational

6.5 Messaggi di Boot-up

Struttura messaggi Boot-up:

COB-ID(hex)	1 CAN Data Byte
700+Node ID	00

6.6 Messaggi PDO

I messaggi PDO sono sempre composti da 4 CAN Data Byte e servono per trasmettere la posizione e/o la velocità attuale dell'encoder.

Struttura messaggi PDO:

IDENTIFIER	
COB-ID(hex)	
F.C.	Node-ID

4 CAN Data Bytes			
Byte 0	Byte 1	Byte 2	Byte 3
Low	…	…	High
Posizione (con PDO1, PDO2 e PDO3)			
Velocità (con PDO4)			

PDO1 Cyclic mode: trasmissione ciclica della posizione

L'encoder trasmette il valore di posizione attraverso PDO1 ciclicamente, vale a dire in modo periodico e indipendente dal master. Il tempo di ciclo è specificato nel parametro **6200-00 Cyclic timer**.
Per attivare (o disattivare) il Cyclic mode è necessario settare a 0 (1) il bit più significativo di COB-ID usato da PDO1 (**1800 Parametri PDO1** sub 1).

PDO2 e PDO3 Sync mode: trasmissione sincrona della posizione

La trasmissione del valore di posizione è gestita dal Master attraverso l'invio di un messaggio denominato SYNC. Il SYNC è un COB ad alta priorità, trasmesso dal Master per richiedere all'encoder la trasmissione del PDO.
Se più nodi (encoder) sono collegati alla rete, il Master riceve i messaggi di risposta al SYNC ordinati in base al numero di nodo degli encoder.

L'encoder può rispondere ogni "n" messaggi di SYNC programmando opportunamente il contatore.
Il PDO sarà inviato dopo la n-esima ricezione del SYNC.
Per il PDO2 il valore "n" del contatore è specificato nell'oggetto **1801 Parametri PDO2**, sub 2.
Per il PDO3 fare riferimento all'oggetto **1802 Parametri PDO3**, sub 2.
Per attivare (o disattivare) il SYNC mode è necessario settare a 0 (1) il bit più significativo di COB-ID usato dal PDO (oggetto **1801 Parametri PDO2** / **1802 Parametri PDO3**, sub 1).

PDO4 Cyclic mode: trasmissione ciclica della velocità

L'encoder trasmette il valore di velocità attraverso PDO4 ciclicamente, vale a dire in modo periodico e indipendente dal master. Il tempo di ciclo è specificato nel **6200-00 Cyclic timer.**
Per attivare (o disattivare) il Cyclic mode è necessario settare a 0 (1) il bit più significativo di COB-ID usato da PDO4 (**1803 Parametri PDO4,** sub 1).

NOTA
Più modi di trasmissione possono essere attivi contemporaneamente.

6.7 Messaggi SDO

I messaggi SDO sono utilizzati per conoscere o modificare i parametri del dispositivo; tali parametri sono contenuti nel “Dizionario Oggetti”. Il numero di byte utilizzato per i dati è al massimo di 4, altri 4 byte sono utilizzati per i campi Command, Index e Subindex. Gli SDO sono sempre seguiti da conferma, ciò significa che per qualsiasi SDO inviato dal master allo slave, quest’ultimo risponde con un SDO adeguato.

Struttura messaggio SDO:

IDENTIFIER		da 4 a 8 CAN data byte							
COB-ID(hex)		0	1	2	3	4	5	6	7
F.C.	Node-ID	Com	Index		Sub	Data			
		1 byte	LSB	MSB	1 byte	LSB	…	…	MSB

Com	command: comando
Index	indice del parametro
Sub	sub-index: secondo indice del parametro
Data	valore letto o scritto del parametro

6.7.1 Command

Il Command byte specifica il tipo di COB inviato alla rete CAN.

I principali COB sono:

- Set: usato per inviare dati di configurazione;
- Req: usato per richiedere dati di configurazione;
- Warning: usato dallo slave per notificare anomalie negli SDO inviati dal master (es. Indice inesistente, Valore process data non valido, …).

Command	COB	Tipo COB	Nr. byte Data
22h	Set	richiesta M → S	non spec.
23h	Set	richiesta M → S	4 byte
2Bh	Set	richiesta M → S	2 byte
2Fh	Set	richiesta M → S	1 byte
60h	Set	conferma S → M	0 byte
40h	Req	richiesta M → S	0 byte
42h	Req	risposta S → M	non spec.
43h	Req	risposta S → M	4 byte
4Bh	Req	risposta S → M	2 byte
4Fh	Req	risposta S → M	1 byte
41h	Req	risposta S → M SDO concatenati	
80h	Warning	risposta S → M	4 byte

6.8 Dizionario oggetti

Di seguito sono riportati gli oggetti implementati nel dispositivo. Per ciascuno è indicato:

Index-subindex Nome oggetto
[tipo var, attributo]

- Index e subindex sono espressi in esadecimale.
- Attributo:
  ro = oggetto accessibile in sola lettura
  rw = oggetto accessibile in lettura e scrittura

Struttura oggetti Unsigned16:

Data byte	
byte 4	byte 5
LSByte	MSByte

Struttura oggetti Unsigned32:

Data byte			
byte 4	byte 5	byte 6	byte 7
LSByte	…	…	MSByte

6.8.1 Oggetti standard (DS 301)

1000-00 Tipo di dispositivo

[Unsigned32, ro]
Default = 0001 0196h = encoder monogiro, DS 406
0002 0196h = encoder multigiro, DS 406

1001-00 Registro errori

[Unsigned8, ro]
Per ogni situazione di errore: bit 0 = “1”
Default = 00h

1003 Campo errori predefinito

Conserva memoria degli ultimi quattro errori che hanno generato un messaggio Emergenza.

- 00 Numero errori presenti [Unsigned8, rw]
  per cancellare la cronologia degli errori scrivere 00h.
- 01 Ultimo errore verificatosi [Unsigned32, ro]
- 02…04 Precedenti errori [Unsigned32, ro]

1005-00 COB-ID messaggi Sync

[Unsigned32, rw]

Default = 0000 0080h

1008-00 Nome del costruttore

[String, ro]
Visualizza il nome del costruttore del dispositivo.
Default = “Datalogic Automation Srl”

1009-00 Versione hardware

[String, ro]
Visualizza la versione hardware del dispositivo.

100A-00 Versione software

[String, ro]
Visualizza la versione software del dispositivo.

100C-00 Guard time

[Unsigned16, rw]
Contiene il valore di Guard time espresso in msec (millisecondi).
Il parametro **100C-00 Guard time** è utilizzato nel “Node guarding protocol” gestito dal master.
Per maggiori dettagli si veda la sezione “6.11 Node guarding protocol”.
Default = 0000h

100D-00 Life time factor

[Unsigned8, rw]
Il parametro **100D-00 Life time factor** è utilizzato nel “Node guarding protocol” gestito dal master.
Per maggiori dettagli si veda la sezione “6.11 Node guarding protocol”.
Default = 00h

1010-01 Salvataggio parametri

[Unsigned32, rw]

Oggetto utilizzato per eseguire il salvataggio di tutti i parametri nella memoria non volatile. Scrivere “save” (in codifica ASCII esadecimale) nei data byte:

Master → Encoder

COB-ID	Cmd	Index		Sub	Data bytes			
600+ID	23	10	10	01	73	61	76	65

Encoder → Master (conferma)

COB-ID	Cmd	Index		Sub	Data bytes			
580+ID	60	10	10	01	00	00	00	00

1011-01 Parametri di default

[Unsigned32, rw]

Oggetto utilizzato per caricare tutti i parametri di default.

Scrivere “load” (in codifica ASCII esadecimale) nei data byte e successivamente eseguire un comando Reset node:

Master → Encoder

COB-ID	Cmd	Index		Sub	Data bytes			
600+ID	23	11	10	01	6C	6F	61	64

Encoder → Master (conferma)

COB-ID	Cmd	Index		Sub	Data bytes			
580+ID	60	11	10	01	00	00	00	00

Master → Encoder (Reset node)

COB-ID	Cmd	Slave ID
000	81	ID

Encoder → Master (Boot-up)

COB-ID	Cmd
700+ID	00

NOTA

Per conservare i parametri di default impostati, eseguire **1010-01 Salvataggio parametri**.

1014-00 COB-ID EMCY

[Unsigned32, rw]
Questo oggetto definisce il COB-ID usato dal dispositivo per i messaggi Emergenza (EMCY).
Se l'indirizzo del nodo è impostato mediante i dip-switch interni (vale a dire, se almeno uno dei dip-switch utilizzati per l'impostazione del nodo ha valore 1 = livello logico ALTO), all'accensione del dispositivo questo oggetto è sempre forzato al valore di default. Al contrario, se l'indirizzo del nodo è impostato via software (vale a dire, se tutti i dip-switch utilizzati per l'impostazione del nodo hanno valore 0 = livello logico BASSO) esso mantiene invece il valore impostato, a meno che all'accensione non sia forzata una procedura di impostazione di un nuovo indirizzo.
Default = 0000 0080h+NodeID

1015-00 Inhibit time EMCY

[Unsigned16, rw]
Inhibit time dei messaggi Emergenza (EMCY) espresso in multipli di 100 µs. Quando impostata a 0, la funzione è disabilitata.
Default = 0000h

1018 Informazioni di identificazione

- 01 Identificativo del costruttore [Unsigned32, ro]
- 02 Codice prodotto [Unsigned32, ro]
- 03 Numero revisione [Unsigned32, ro]

1800 Parametri PDO1

Il PDO1 è usato di default per la trasmissione ciclica del valore della posizione.
Fare riferimento **6200-00 Cyclic timer** per impostare il tempo di ciclo.

- 01 COB-ID usato da PDO1 [Unsigned32, rw]
  Se l'indirizzo del nodo è impostato mediante i dip-switch interni (vale a dire, se almeno uno dei dip-switch utilizzati per l'impostazione del nodo ha valore 1 = livello logico ALTO), all'accensione del dispositivo questo oggetto è sempre forzato al valore di default. Al contrario, se l'indirizzo del nodo è impostato via software (vale a dire, se tutti i dip-switch utilizzati per l'impostazione del nodo hanno valore 0 = livello logico BASSO) esso mantiene invece il valore impostato, a meno che all'accensione non sia forzata una procedura di impostazione di un nuovo indirizzo.
  Default = 4000 0180h+NodeID (no RTR, COB-ID)
- 02 Tipo di trasmissione [Unsigned8, rw]
  Default = FEh (trasmissione ciclica)

1801 Parametri PDO2

Il PDO2 è usato di default per la trasmissione sincrona del valore della posizione.

- 01 COB-ID usato da PDO2 [Unsigned32, rw]
  Se l'indirizzo del nodo è impostato mediante i dip-switch interni (vale a dire, se almeno uno dei dip-switch utilizzati per l'impostazione del nodo ha valore 1 = livello logico ALTO), all'accensione del dispositivo questo oggetto è sempre forzato al valore di default. Al contrario, se l'indirizzo del nodo è impostato via software (vale a dire, se tutti i dip-switch utilizzati per l'impostazione del nodo hanno valore 0 = livello logico BASSO) esso mantiene invece il valore impostato, a meno che all'accensione non sia forzata una procedura di impostazione di un nuovo indirizzo.
  Default = 4000 0280h+NodeID (no RTR, COB-ID)
- 02 Tipo di trasmissione [Unsigned8, rw]
  Default = 01h (trasmissione sincrona ogni SYNC).

1802 Parametri PDO3

Il PDO3 è usato di default per la trasmissione sincrona del valore della posizione.

- 01 COB-ID usato da PDO3 [Unsigned32, rw]
  Se l'indirizzo del nodo è impostato mediante i dip-switch interni (vale a dire, se almeno uno dei dip-switch utilizzati per l'impostazione del nodo ha valore 1 = livello logico ALTO), all'accensione del dispositivo questo oggetto è sempre forzato al valore di default. Al contrario, se l'indirizzo del nodo è impostato via software (vale a dire, se tutti i dip-switch utilizzati per l'impostazione del nodo hanno valore 0 = livello logico BASSO) esso mantiene invece il valore impostato, a meno che all'accensione non sia forzata una procedura di impostazione di un nuovo indirizzo.
  Default = C000 0380h+NodeID (disattivato, no RTR)
- 02 Tipo di trasmissione [Unsigned8, rw]
  Default = 01h (trasmissione sincrona ogni SYNC).

1803 Parametri PDO4

Il PDO4 è usato di default per la trasmissione ciclica del valore della velocità.
Fare riferimento **6200-00 Cyclic timer** per impostare il tempo di ciclo.

- 01 COB-ID usato da PDO4 [Unsigned32, rw]
  Se l'indirizzo del nodo è impostato mediante i dip-switch interni (vale a dire, se almeno uno dei dip-switch utilizzati per l'impostazione del nodo ha valore 1 = livello logico ALTO), all'accensione del dispositivo questo oggetto è sempre forzato al valore di default. Al contrario, se l'indirizzo del nodo è impostato via software (vale a dire, se tutti i dip-switch utilizzati per l'impostazione del nodo hanno valore 0 = livello logico BASSO) esso mantiene invece il valore impostato, a meno che all'accensione non sia forzata una procedura di impostazione di un nuovo indirizzo.
  Default = C000 0480h+NodeID (disattivato, no RTR)
- 02 Tipo di trasmissione [Unsigned8, rw]
  Default = FEh (trasmissione ciclica)

NOTA
- La trasmissione dei PDO1, PDO2, PDO3 e PDO4 può essere attivata (disattivata) impostando a “0” (“1”) il bit più significativo del relativo oggetto 180xh, sub1.
- La modalità di trasmissione ciclica o sincrona può essere modificata impostando opportunamente il valore dell’oggetto 180xh, sub2. Per ottenere la trasmissione della quota (o della velocità) ogni "n" SYNC, impostare il valore "n" nell’oggetto 180xh, sub 2.
  01h: trasmissione sincrona ogni SYNC
  02h: trasmissione sincrona ogni 2 SYNC
  …
  FEh: trasmissione ciclica

1A00-01 Mappatura PDO1

[Unsig32, ro]
In questo oggetto è mappata la posizione dell’encoder, secondo le specifiche DS406.
Default = 6004 0020h

1A01-01 Mappatura PDO2

[Unsig32, ro]
Si veda l'oggetto **1A00-01 Mappatura PDO1**.

1A02-01 Mappatura PDO3

[Unsig32, ro]
Si veda l'oggetto **1A00-01 Mappatura PDO1**.

1A03-01 Mappatura PDO4

[Unsig32, ro]
In questo oggetto è mappata la velocità dell’encoder, secondo le specifiche del costruttore.
Default = 3006 0020h

6.8.2 Oggetti specifici del costruttore

2104-00 Limit switch min

[Unsigned32, rw]
Il bit 12 dell'oggetto **6500-00 Stato operativo** è impostato a "1" se la quota dell'encoder è inferiore al valore impostato in questo oggetto. Attivo se bit 12 di **6000-00 Parametri operativi** = "1".
Default = 0000 0010h

2105-00 Limit switch max

[Unsigned32, rw]
Permette di impostare il valore massimo del finecorsa software.
Il bit 13 dell'oggetto **6500-00 Stato operativo** è impostato a "1" se la quota dell'encoder è superiore al valore impostato in questo oggetto. Attivo se bit 13 di **6000-00 Parametri operativi** = "1".
Default = 003F FFF0h

3000-00 Velocità trasmissione dati

[Unsigned8, rw]
Questo oggetto definisce il baud rate del dispositivo secondo la seguente tabella.

Data byte	Baud rate
00h	20 Kbit/s
01h	50 Kbit/s
02h	100 Kbit/s
03h	125 Kbit/s
04h	250 Kbit/s
05h	500 Kbit/s (default)
06h	800 Kbit/s
07h	1000 Kbit/s

La velocità di trasmissione dati è definita dall'oggetto **3000-00 Velocità trasmissione dati** solo se il bit 4 di DIP A è impostato a "OFF". Se il bit 4 di DIP A è impostato a "ON", la velocità di trasmissione dati è definita da DIP A. Per maggiori informazioni si veda la sezione ""4.8 Velocità di trasmissione dati: DIP A".
La procedura per impostare il baud rate prevede:

- la modifica del valore nell'oggetto **3000-00 Velocità trasmissione dati**;
- l'esecuzione del comando Reset nodo (o Reset comunicazione);
- il salvataggio del nuovo parametro;
- l'impostazione del Master al nuovo valore di baud rate.

Default = 05h

Master → Encoder

COB-ID	Cmd	Index		Sub	Data byte
600+ID	2F	00	30	00	vedi tabella

Encoder → Master (conferma)

COB-ID	Cmd	Index		Sub	Data byte
580+ID	60	00	30	00	00

Master → Encoder (Reset nodo)

COB-ID	Cmd	Slave ID
000	81	ID

Commutare il master al nuovo baud rate:

Encoder → Master (Boot-up con nuovo baud rate)

COB-ID	Cmd
700+ID	00

NOTA

Per non perdere il baud rate impostato, **1010-01 Salvataggio parametri**, altrimenti alla successiva accensione sarà caricato il precedente valore di baud rate.

3001-00 Node-ID

[Unsigned8, rw]
Questo oggetto definisce il numero di nodo del dispositivo.
L'indirizzo del nodo è definito dall'oggetto **3001-00 Node-ID** solo se tutti i bit di DIP B sono impostati a "OFF" (indirizzo 0). Se almeno 1 bit di DIP B è impostato a "ON" l'indirizzo è definito da DIP B. Per maggiori informazioni si veda la sezione "4.9 Indirizzo nodo: DIP B".

La procedura per eseguire il cambio del Node-ID prevede:

- la modifica del valore nell'oggetto **3001-00 Node-ID**;
- l'esecuzione del comando Reset nodo;
- il salvataggio del nuovo parametro.

Default = 01h

Master → Encoder

COB-ID	Cmd	Index		Sub	Data byte
600+ID	2F	01	30	00	nuovo Node-ID

Encoder → Master (conferma)

COB-ID	Cmd	Index		Sub	Data byte
580+ID	60	01	30	00	00

Master → Encoder (Reset nodo)

COB-ID	Cmd	Slave ID
000	81	ID vecchio

Encoder → Master (Boot-up con nuovo Node-ID)

COB-ID	Cmd
700+ID	00

NOTA
Eseguire **1010-01 Salvataggio parametri** utilizzando il nuovo Node-ID, altrimenti alla successiva accensione sarà caricato il precedente valore di Node-ID.

3005-00 Formato velocità

[Unsigned8, rw]
Questo oggetto definisce il formato del valore della velocità:
00h: informazioni/secondo (default);
01h: rpm (giri al minuto).

3006-00 Valore della velocità

[Unsigned32, ro]
Questo oggetto contiene il valore di velocità calcolato ogni 100 ms.
Il valore è trasmesso secondo le impostazioni **1803 Parametri PDO4**.

6.8.3 Oggetti profilo encoder (DS 406)

6000-00 Parametri operativi

[Unsigned16, rw]

Bit	Funzione	bit = 0	bit = 1
0	**Direzione di conteggio**	Orario	Antiorario
1	Non utilizzato		
2	**Funzione di scaling**	Disabilitato	Abilitato
3…11	Non utilizzato		
12	**Limit switch min.**	Disabilitato	Abilitato
13	**Limit switch max.**	Disabilitato	Abilitato
14…15	Non utilizzato		

Default = 0000h

Direzione di conteggio

Imposta se il valore di posizione trasmesso dall'encoder incrementa con la rotazione oraria oppure antioraria del dispositivo. Se **Direzione di conteggio** = 0, il valore di posizione incrementa quando l'albero ruota in senso orario; al contrario, se **Direzione di conteggio** = 1, il valore di posizione incrementa quando l'albero ruota in senso antiorario. Il senso di rotazione è stabilito guardando l'encoder dall'estremità dell'albero.

Funzione di scaling

Se la funzione è disabilitata, l'encoder utilizza la propria risoluzione fisica (vedi oggetti **6501-00 Informazioni per giro fisiche** e **6502-00 Numero di giri fisico**); se abilitata, l'encoder utilizza la risoluzione impostata negli oggetti **6001-00 Informazioni per giro** e **6002-00 Risoluzione totale** con la seguente relazione:

Posizione trasmessa =

$$\frac{\textbf{6001-00 Informazioni per giro}}{\textbf{6501-00 Informazioni per giro fisiche}} * \text{posizione reale} \leq \underset{\text{Risoluzione totale}}{\text{6002-00}}$$

ATTENZIONE

Ogniqualvolta si abilita la funzione di scaling e/o si modificano i valori di scaling (si vedano gli oggetti **6001-00 Informazioni per giro** e **6002-00 Risoluzione totale**) sarà poi necessario impostare anche un nuovo valore di preset (si veda l'oggetto **6003-00 Valore di preset**) e quindi salvare i nuovi parametri (si veda l'oggetto **1010-01 Salvataggio parametri**

Limit switch min.
Limit switch max.

Permette di abilitare / disabilitare la funzione degli oggetti **2104-00 Limit switch min** e **2105-00 Limit switch max**.
Per ulteriori informazioni si veda a pagina 29.

6001-00 Informazioni per giro

[Unsigned32, rw]
Questo oggetto definisce il numero di informazioni per giro desiderate.
Attivo se bit 2 **Funzione di scaling** dell'oggetto **6000-00 Parametri operativi** è impostato a “1”.
Per evitare salti di quota verificare che

$$\frac{\textbf{6501-00 Informazioni per giro fisiche}}{\textbf{6001-00 Informazioni per giro}} = \text{valore intero.}$$

E’ possibile impostare solo valori minori o uguali al numero di informazioni per giro fisiche, **6501-00 Informazioni per giro fisiche** (vedi dati di targa).

ATTENZIONE
Ogniqualvolta si abilita la funzione di scaling (bit 2 **Funzione di scaling** in **6000-00 Parametri operativi**) e/o si modificano i valori di scaling (**6001-00 Informazioni per giro** e **6002-00 Risoluzione totale**) sarà poi necessario impostare anche un nuovo valore di preset (si veda l'oggetto **6003-00 Valore di preset**) e quindi salvare i nuovi parametri (si veda l'oggetto **1010-01 Salvataggio parametri**).

6002-00 Risoluzione totale

[Unsigned32, rw]
Questo oggetto definisce la risoluzione totale desiderata.
Attivo se il bit 2 **Funzione di scaling** dell'oggetto **6000-00 Parametri operativi** impostato a “1”.
E’ possibile impostare solo valori minori o uguali alla **risoluzione totale fisica** (= **6501-00 Informazioni per giro fisiche** * **6502-00 Numero di giri fisico**, vedi dati di targa).

ATTENZIONE
Ogniqualvolta si abilita la funzione di scaling (bit 2 **Funzione di scaling** in **6000-00 Parametri operativi**) e/o si modificano i valori di scaling (**6001-00 Informazioni per giro** e **6002-00 Risoluzione totale**) sarà poi necessario impostare anche un nuovo valore di preset (si veda l'oggetto **6003-00 Valore di preset**) e quindi salvare i nuovi parametri (si veda l'oggetto **1010-01 Salvataggio parametri**)
.

Esempio

Encoder multigiro AMT58-xxx-13x12-CB.

Risoluzione:

- Informazioni per giro fisiche: **6501-00 Informazioni per giro fisiche** = 8192 inf./giro (2^{13})
- Numero di giri fisico: **6502-00 Numero di giri fisico** = 4096 giri (2^{12})
- Risoluzione totale fisica: = 16777216 (2^{24})

Si desidera impostare 2048 inf./giro ∗ 1024 giri:

1 -Attivare la funzione di scaling: **6000-00 Parametri operativiErrore. L'origine riferimento non è stata trovata.**, bit 2 = “1”

2 -Informazioni per giro: **6001-00 Informazioni per giro** = 2048 (0000 0800h)

3 -Risoluzione totale: **6002-00 Risoluzione totale** = 2048 ∗ 1024 = 2097152 (0020 0000h)

NOTA

Per evitare possibili salti di quota si consiglia di impostare sempre valori di potenze di due (2^n: es. 2, 4, …, 2048, 4096, 8192,…) negli oggetti **6001-00 Informazioni per giro** e **6002-00 Risoluzione totale**.

Se si modificano **6001-00 Informazioni per giro** e/o **6002-00 Risoluzione totale** bisogna reimpostare eventuali azzeramenti o **6003-00 Valore di preset**.

6003-00 Valore di preset

[Unsigned32, rw]

Usare questo oggetto per assegnare e impostare un valore di Preset. Con la funzione di preset è possibile assegnare un certo valore a una definita posizione angolare dell’albero encoder. Il valore della posizione da considerare come punto di origine è definito da **6003-00 Valore di preset**

Default = 0000 0000h

NOTA

- Se la funzione di scaling è disabilitata (vedi bit 2 **Funzione di scaling** oggetto **6000-00 Parametri operativi**), **6003-00 Valore di preset** deve essere inferiore alla **risoluzione totale fisica** (**6501-00 Informazioni per giro fisiche** * **6502-00 Numero di giri fisico**).
- Se la funzione di scaling è abilitata (vedi bit 2 **Funzione di scaling** oggetto **6000-00 Parametri operativi**), **6003-00 Valore di preset** deve essere inferiore a **6002-00 Risoluzione totale**.

6004-00 Valore di posizione

[Unsigned32, ro]

Questo oggetto contiene il valore di posizione (eventualmente modificato dalla unzione di scaling, vedi bit 2 **Funzione di scaling** oggetto **6000-00 Parametri perativi**).

Il valore è trasmesso sincronicamente o ciclicamente secondo le impostazioni egli oggetti **1800 Parametri PDO1**, **1801 Parametri PDO2** e **1802 arametri PDO3**.

6200-00 Cyclic timer

[Unsigned16, rw]

Il tempo di ciclo è usato in trasmissione asincrona e specifica il periodo che intercorre tra una trasmissione di PDO e quella successiva, il valore è espresso in millisecondi.

Default = 0000h

6500-00 Stato operativo

[Unsigned16, ro]

Bit	Funzione	bit = 0	bit = 1
0	**Direzione conteggio**	Orario	Antiorario
1	Non utilizzato		
2	**Funzione di scaling**	Disabilitato	Abilitato
3…11	Non utilizzato		
12	**Limit switch min**	posizione > **2104-00 Limit switch min**	posizione < **2104-00 Limit switch min**
13	**Limit switch max**	posizione < **2105-00 Limit switch max**	posizione > **2105-00 Limit switch max**
14	Non utilizzato		
15	**Stato operativo attuale**	Stopped / Pre-operational	Operational

Direzione conteggio

Visualizza se è impostata la direzione di conteggio oraria (0) o antioraria (1). Per impostare la direzione di conteggio si veda il bit 0 **Direzione di conteggio** dell'oggetto **6000-00 Parametri operativi**.

Funzione di scaling

Visualizza se la funzione di scaling è disabilitata (0) o abilitata (1). Per abilitare / disabilitare la funzione di scaling si veda il l bit 2 **Funzione di scaling** dell'oggetto **6000-00 Parametri operativi**.

Limit switch min

Questo oggetto contiene il valore di posizione (eventualmente modificato dalla funzione di scaling, vedi bit 2 **Funzione di scaling** oggetto **6000-00 Parametri operativi**).
Il valore è trasmesso sincronicamente o ciclicamente secondo le impostazioni degli oggetti **1800 Parametri PDO1**, **1801 Parametri PDO2** e **1802 Parametri PDO3**.

Limit switch max

Se la posizione dell'encoder è minore del valore impostato all'oggetto **2105-00 Limit switch max**, il bit 13 **Limit switch max** ha valore “0”.
Se la posizione dell'encoder è maggiore del valore impostato all'oggetto **2105-00 Limit switch max**, il bit 13 **Limit switch max** ha valore “1”.
Per utilizzare questa funzione abilitare il bit 13 dell’oggetto **6000-00 Parametri operativi**.

Stato operativo attuale

Funzione utile per conoscere da remoto lo stato di funzionamento del dispositivo (si veda la sezione “6.2 Funzionamento a stati“.
bit 15 = 0: stato Stopped o Pre-operational;
bit 15 = 1: stato Operational.

6501-00 Informazioni per giro fisiche

[Unsig32, ro]
Questo oggetto definisce il numero fisico di informazioni per giro del dispositivo.
Per impostare una risoluzione personalizzata si veda all'oggetto **6001-00 Informazioni per giro**.

6502-00 Numero di giri fisico

[Unsigned16, ro]
Questo oggetto definisce il numero fisico di giri del dispositivo.
La risoluzione totale fisica del dispositivo risulta:
“Risoluzione totale fisica” = **6501-00 Informazioni per giro fisiche** * **6502-00 Numero di giri fisico**.
Per impostare una risoluzione totale personalizzata si veda agli oggetti **6001- 00 Informazioni per giro** e **6002-00 Risoluzione totale**.

6504-00 Allarmi supportati

[Unsigned16, ro]
Default = 0000h (nessun allarme supportato)

6506-00 Warning supportati

[Unsigned16, ro]
Default = 0000h (nessuna avvertenza supportata)

6507-00 Versione profilo e software

[Unsig32, ro]

Contiene la versione del profilo e del software.
Versione profilo = 3.1
Versione software = 1.1
Default = 0301 0101h

6508-00 Tempo di lavoro dispositivo

[Unsig32, ro]
Default = FFFF FFFFh (non gestito)

6509-00 Valore di offset

[Integer32, ro]
Questo oggetto contiene il valore di Offset che risulta dalla differenza tra la posizione fisica dell'encoder e quella relativa al Preset (si veda l'oggetto **6003-00 Valore di preset**).
Default = 0000 0000h

650A-01 Valore di offset del costruttore

[Int32, ro]
Questo oggetto contiene il valore di offset calcolato come differenza dello zero meccanico del dispositivo e lo zero software impostato dal costruttore.
Default = 0000 0000h

650B-00 Numero di serie

[Unsigned32, ro]
Default = FFFF FFFFh (non gestito)

NOTA
Per salvare i parametri modificati eseguire **1010-01 Salvataggio parametri**. Nel caso di spegnimento del dispositivo o di invio dei comandi Reset nodo o Reset comunicazione i dati non salvati andranno persi.

6.9 Messaggi di avvertenza

Per conoscere il significato dei messaggi di avvertenza fare riferimento alla sezione “SDO abort codes” del documento “CiA Draft Standard 301” disponibile sul sito www.can-cia.org.

6.10 Messaggi Emergenza

I messaggi di emergenza (EMCY) sono trasmessi dal dispositivo per segnalare condizioni di errore interno.

Struttura messaggio EMCY:

IDENTIFIER	CAN Data Byte			
COB-ID(hex)	0	1	2	3…7
vedi oggetto **1014-00 COB-ID EMCY**	Codice errore		Sub registro errori	Codici specifici
	LSB	MSB	01	00…00

Codice errore previsti:
1000h = Errore Node guarding
5530h = Errore memoria flash

6.11 Node guarding protocol

All'accensione il "Node guarding protocol" è disattivo; tale protocollo si attiva automaticamente alla prima richiesta RTR (Remote Transmit Request) da parte del dispositivo master.

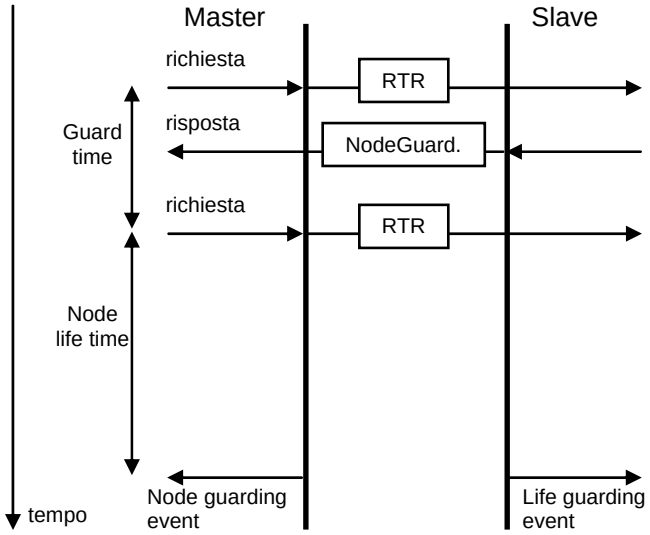

100C-00 Guard time: tempo previsto tra due messaggi RTR.
Node life time: tempo entro il quale lo slave deve ricevere un ulteriore RTR dal Master.

Node life time = **100C-00 Guard time** * **100D-00 Life time factor**

Il "Node guarding" è abilitato solo se Node life time ≠ 0.

Se lo slave non riceve un messaggio RTR entro il tempo Node life time viene segnalato un "Life Guarding Event" con relativa segnalazione LED "Node guarding error", aggiornamento degli oggetti **1001-00 Registro errori** e **1003 Campo errori predefinito** e invio del messaggio di errore.
Per resettare l'errore è sufficiente eseguire un comando Reset nodo.

7 - Programmazione

Di seguito sono riportati esempi di lettura e impostazione di alcuni parametri. Negli esempi si considera l'indirizzo dell'encoder pari a "ID", mentre il Master ha sempre indirizzo 0.
Tutti i valori sono espressi in notazione esadecimale.

Impostazione stato Operational, Pre-operational

Messaggio NMT Master → Slave

	COB-ID	Cmd	Nodo
Operational:	000	01	ID
Pre-operational:	000	80	ID

Impostazione 6001-00 Informazioni per giro (2^{10}=400h)

Master → Encoder (richiesta Set)

COB-ID	Cmd	Index		Sub	Process data			
600+ID	23	01	60	00	00	40	00	00

Encoder → Master (conferma Set)

COB-ID	Cmd	Index		Sub	Process data			
580+ID	60	01	60	00	00	00	00	00

Impostazione 6002-00 Risoluzione totale (2^{24}=1000000h)

Master → Encoder (richiesta Set)

COB-ID	Cmd	Index		Sub	Process data			
600+ID	23	02	60	00	00	00	00	01

Encoder → Master (conferma Set)

COB-ID	Cmd	Index		Sub	Process data			
580+ID	60	02	60	00	00	00	00	00

Impostazione 6000-00 Parametri operativi
(**Direzione di conteggio**: orario, **Funzione di scaling**: abilitato, **Limit switch min.** / **Limit switch max.**: disabilitato)

Master → Encoder (richiesta Set)

COB-ID	Cmd	Index		Sub	Process data			
600+ID	2B	00	60	00	04	00	-	-

Encoder → Master (conferma Set)

COB-ID	Cmd	Index		Sub	Process data			
580+ID	60	00	60	00	00	00	-	-

Impostazione 6003-00 Valore di preset (preset = 1000 = 3E8h)

Master → Encoder (richiesta Set)

COB-ID	Cmd	Index		Sub	Process data			
600+ID	23	03	60	00	E8	03	00	00

Encoder → Master (conferma Set)

COB-ID	Cmd	Index		Sub	Process data			
580+ID	60	03	60	00	00	00	00	00

Impostazione contatore Sync 1801 Parametri PDO2, sub 2 (n = 5 = 05h)

Master → Encoder (richiesta Set)

COB-ID	Cmd	Index		Sub	Process data			
600+ID	2F	01	18	02	05	-	-	-

Encoder → Master (conferma Set)

COB-ID	Cmd	Index		Sub	Process data			
580+ID	60	01	18	02	00	-	-	-

Disattivazione Sync mode 1801 Parametri PDO2, sub 1
Lettura COB-ID usato da PDO2:

Master → Encoder (richiesta Req)

COB-ID	Cmd	Index		Sub	Process data			
600+ID	40	01	18	01	-	-	-	-

Encoder → Master (risposta Req)

COB-ID	Cmd	Index		Sub	Process data			
580+ID	43	01	18	01	B0	B1	B2	B3

COB-ID usato da PDO2 = ((B3<<24) | (B2<<16) | (B1<<8) | B0)
porre a 1 il bit più significativo:

```
B3 |= 0x80;
```

Impostazione nuovo COB-ID usato da PDO2 (**1801 Parametri PDO2**, sub 1):

Master → Encoder (richiesta Set)

COB-ID	Cmd	Index		Sub	Process data			
600+ID	23	01	18	01	B0	B1	B2	B3

Encoder → Master (conferma Set)

COB-ID	Cmd	Index		Sub	Process data			
580+ID	60	01	18	01	00	00	00	00

Attivazione Cyclic mode
Impostazione **6200-00 Cyclic timer** (100 ms = 64h)

Master → Encoder (richiesta Set)

COB-ID	Cmd	Index		Sub	Process data			
600+ID	2B	00	62	00	64	00	-	-

Encoder → Master (conferma Set)

COB-ID	Cmd	Index		Sub	Process data			
580+ID	60	00	62	00	00	00	-	-

Lettura COB-ID usato da PDO1 (**1800 Parametri PDO1**, sub 1):

Master → Encoder (richiesta Req)

COB-ID	Cmd	Index		Sub	Process data			
600+ID	40	00	18	01	-	-	-	-

Encoder → Master (risposta Req)

COB-ID	Cmd	Index		Sub	Process data			
580+ID	43	00	18	01	B0	B1	B2	B3

COB-ID usato da PDO1 = ((B3<<24) | (B2<<16) | (B1<<8) | B0)
porre a 0 il bit più significativo:
`B3 &= 0x7F;`

Impostazione nuovo COB-ID usato da PDO1 (**1800 Parametri PDO1**, sub 1):Master → Encoder (richiesta Set)

COB-ID	Cmd	Index		Sub	Process data			
600+ID	23	00	18	01	B0	B1	B2	B3

Encoder → Master (conferma Set)

COB-ID	Cmd	Index		Sub	Process data			
580+ID	60	00	18	01	00	00	00	00

NOTA
Per salvare i parametri modificati eseguire **1010-01 Salvataggio parametri.**
Nel caso di spegnimento del dispositivo o di invio dei comandi Reset nodo o Reset comunicazione i dati non salvati andranno persi.

8 - Tabella parametri di default

I valori di default sono espressi in notazione esadecimale.

Lista parametri	Valore di default
1000-00 Tipo di dispositivo	0x00010196 0x00020196
1001-00 Registro errori	0x00
1003 Campo errori predefinito	-
1005-00 COB-ID messaggi Sync	0x00000080
1008-00 Nome del costruttore	Datalogic Automation Srl*
1009-00 Versione hardware	-
100A-00 Versione software	-
100C-00 Guard time	0x0000
100D-00 Life time factor	0x00
1014-00 COB-ID EMCY	NODEID+0x00000080
1015-00 Inhibit time EMCY	0x0000
1018 Informazioni di identificazione	-
1800 Parametri PDO1, sub 1	NODEID+0x40000180
1800 Parametri PDO1, sub 2	0xFE
1801 Parametri PDO2, sub 1	NODEID+0x40000280
1801 Parametri PDO2, sub 2	0x01
1802 Parametri PDO3, sub 1	NODEID+0xC0000380
1802 Parametri PDO3, sub 2	0x01
1803 Parametri PDO4, sub 1	NODEID+0xC0000480
1803 Parametri PDO4, sub 2	0xFE
1A00-01 Mappatura PDO1	0x60040020
1A01-01 Mappatura PDO2	0x60040020
1A02-01 Mappatura PDO3	0x60040020
1A03-01 Mappatura PDO4	0x36000020
2104-00 Limit switch min	0x00000010
2105-00 Limit switch max	0x003FFFF0
3000-00 Velocità trasmissione dati	0x05
3001-00 Node-ID	0x01
3005-00 Formato velocità	0x00
6000-00 Parametri operativi	0x0000
6001-00 Informazioni per giro	-
6002-00 Risoluzione totale	-
6003-00 Valore di preset	0x00000000
6200-00 Cyclic timer	0x0000
6500-00 Stato operativo	0x0000
6504-00 Allarmi supportati	0x0000
6506-00 Warning supportati	0x0000
6507-00 Versione profilo e software	0x03010101
6508-00 Tempo di lavoro dispositivo	0xFFFFFFFF
6509-00 Valore di offset	0x00000000
650A-01 Valore di offset del costruttore	0x00000000
650B-00 Numero di serie	0xFFFFFFFF

* Stringa di testo

DATALOGIC

Absolute Encoders

AMT58...13x12 PB

PROFI® PROCESS FIELD BUS BUS

Profibus-DP Profile for Encoders

Instruction Manual

Datalogic S.r.l.
Via S. Vitalino 13
40012 Calderara di Reno
Bologna - Italy

© 2014 - 2017 Datalogic S.p.A. and/or its affiliates ◆ ALL RIGHTS RESERVED. ◆ Without limiting the rights under copyright, no part of this documentation may be reproduced, stored in or introduced into a retrieval system, or transmitted in any form or by any means, or for any purpose, without the express written permission of Datalogic S.p.A. and/or its affiliates.

Datalogic and the Datalogic logo are registered trademarks of Datalogic S.p.A. in many countries, including the U.S.A. and the E.U.

All other trademarks and brands are property of their respective owners. Datalogic reserves the right to make modifications and improvements without prior notification.

16/06/17

INDEX

1 - Safety summary 1
2 - Identification 3
3 - Mounting instructions 4
3.1 Solid shaft encoders 4
3.1.1 Customary installation 4
3.1.2 Installation using fixing clamps (optional kit code ST-58-KIT) 4
3.1.3 Installation using a mounting bell (code ST-58-FLNG) 5
3.2 Hollow shaft encoders 6
3.2.1 AMT58-H15 6
4 - Electrical connections 6
4.1 Connection cap 7
4.2 Ground connection 8
4.3 Connection cap with PGs (Figure 1) 8
4.4 Connection cap with M12 connectors (Figure 1) 9
4.5 Connection of the shield 10
4.6 Node address: DIP A (Figure 1) 10
4.7 Baud rate 11
4.8 Bus termination (Figure 1) 12
4.9 Diagnostic LEDs (Figure 1) 13
5 - Quick reference 14
5.1 Configuring the encoder via Siemens STEP7 14
5.1.1 Importing GSD file 14
5.1.2 Adding a node to the project 16
5.1.3 Encoder configuration parameters 17
5.2 Reading the diagnostic information 25
5.3 Setting the Preset value 27
6 - Profibus interface 28
6.1 GSD file 28
6.2 Classes of the Device profile 29
6.3 Operating modes 29
6.4 DDLM_Set_Prm 31
6.4.1 Byte 10 - Operating parameters 31
Code sequence 32
Class 2 functionality 32
Scaling function 32
6.4.2 Bytes 11 - 12 33
Counts per revolution 33
6.4.3 Bytes 13 … 16 34
Total resolution 34
6.5 DDLM_Chk_Cfg 37
6.6 DDLM_Data_Exchange 38
Position 38
Preset 38
6.7 DDLM_Slave_Diag 40
6.8 "Red zone" 41
7 – Default parameters list 43

Subject index

C
Class 2 functionality; 32
Code sequence; 32
Counts per revolution; 33
P
Position; 38
Preset; 38
S
Scaling function; 32
T
Total resolution; 34

Typographic and iconographic conventions

In this guide, to make it easier to understand and read the text the following typographic and iconographic conventions are used:

- parameters and objects both of the device and the interface are coloured in ORANGE;
- alarms are coloured in RED;
- states are coloured in FUCSIA.

When scrolling through the text some icons can be found on the side of the page: they are expressly designed to highlight the parts of the text which are of great interest and significance for the user. Sometimes they are used to warn against dangers or potential sources of danger arising from the use of the device. You are advised to follow strictly the instructions given in this guide in order to guarantee the safety of the user and ensure the performance of the device. In this guide the following symbols are used:

	This icon, followed by the word WARNING, is meant to highlight the parts of the text where information of great significance for the user can be found: user must pay the greatest attention to them! Instructions must be followed strictly in order to guarantee the safety of the user and a correct use of the device. Failure to heed a warning or comply with instructions could lead to personal injury and/or damage to the unit or other equipment.
	This icon, followed by the word NOTE, is meant to highlight the parts of the text where important notes needful for a correct and reliable use of the device can be found. User must pay attention to them! Failure to comply with instructions could cause the equipment to be set wrongly: hence a faulty and improper working of the device could be the consequence.
	This icon is meant to highlight the parts of the text where suggestions useful for making it easier to set the device and optimize performance and reliability can be found. Sometimes this symbol is followed by the word EXAMPLE when instructions for setting parameters are accompanied by examples to clarify the explanation.

Preliminary information

This guide is designed to describe the technical characteristics, installation and use of the Profibus encoders of the AMT58-PB series. For any further information please refer to the product datasheet.

To make it easier to read the text, this guide is divided into two main sections.
In the first section general information concerning the safety, the mechanical installation and the electrical connection as well as tips for setting up and running properly and efficiently the unit are provided.
In the second section, entitled Profibus Interface, both general and specific information is given on the Profibus interface. In this section the interface features and the parameters implemented in the unit are fully described.

1 - Safety summary

Safety

- Always adhere to the professional safety and accident prevention regulations applicable to your country during device installation and operation;
- installation and maintenance operations have to be carried out by qualified personnel only, with power supply disconnected and stationary mechanical parts;
- device must be used only for the purpose appropriate to its design: use for purposes other than those for which it has been designed could result in serious personal and/or the environment damage;
- high current, voltage and moving mechanical parts can cause serious or fatal injury;
- warning ! Do not use in explosive or flammable areas;
- failure to comply with these precautions or with specific warnings elsewhere in this manual violates safety standards of design, manufacture, and intended use of the equipment;
- Datalogic Automation s.r.l. assumes no liability for the customer's failure to comply with these requirements.

Electrical safety

- Turn off power supply before connecting the device;
- connect according to explanation in section “4 - Electrical connections”;
- in compliance with the 2014/30/EU norm on electromagnetic compatibility, following precautions must be taken:
  - before handling and installing, discharge electrical charge from your body and tools which may come in touch with the device;
  - power supply must be stabilized without noise, install EMC filters on device power supply if needed;
  - always use shielded cables (twisted pair cables whenever possible);
  - avoid cables runs longer than necessary;
  - avoid running the signal cable near high voltage power cables;
  - mount the device as far as possible from any capacitive or inductive noise source, shield the device from noise source if needed;
  - to guarantee a correct working of the device, avoid using strong magnets on or near by the unit;
  - minimize noise by connecting the shield and/or the connector housing and/or the frame to ground. Make sure that ground is not affected by noise. The connection point to ground can be situated both on the device side and on user’s side. The best solution to minimize the interference must be carried out by the user.

Mechanical safety

- Install the device following strictly the information in the section “3 - Mounting instructions”;
- mechanical installation has to be carried out with stationary mechanical parts;
- do not disassemble the encoder;
- do not tool the encoder or its shaft;
- delicate electronic equipment: handle with care; do not subject the device and the shaft to knocks or shocks;
- respect the environmental characteristics declared by manufacturer;
- unit with solid shaft: in order to guarantee the maximum reliability over time of the mechanical parts, we recommend a flexible coupling to be installed to connect the encoder and the installation shaft; make sure the misalignment tolerances of the flexible coupling are respected;
- unit with hollow shaft: the encoder can be mounted directly on a shaft whose diameter has to respect the technical characteristics specified in the purchase order and clamped by means of the collar and the fixing plate into which an anti-rotation pin has to be inserted.

2 - Identification

Device can be identified through the ordering code and the serial number printed on the label applied to its body. Information is listed in the delivery document too.
Please always quote the ordering code and the serial number when reaching Datalogic Automation s.r.l. for purchasing spare parts or needing assistance.

For any information on the technical characteristics of the product refer to the technical catalogue.

3 - Mounting instructions

WARNING
Installation has to be carried out by qualified personnel only, with power supply disconnected and mechanical parts compulsorily in stop.
Never force the rotation of the shaft manually, it could cause irreparable damage!

3.1 Solid shaft encoders

- Mount the flexible coupling 1 on the encoder shaft;
- fix the encoder to the flange 2 (or to the mounting bell) by means of screws 3;
- secure the flange 2 to the support (or the mounting bell to the motor);
- mount the flexible coupling 1 on the motor shaft;
- make sure the misalignment tolerances of the flexible coupling 1 are respected.

3.1.1 Customary installation

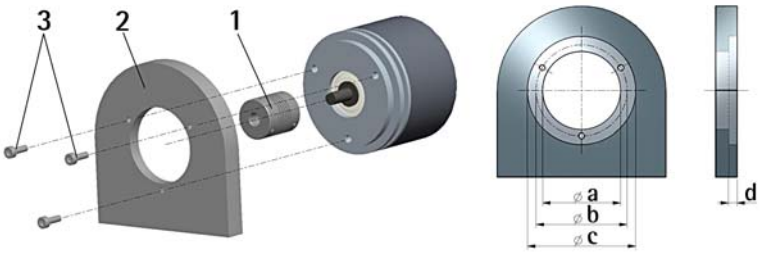

	a [mm]	b [mm]	c [mm]	d [mm]
AMT58	36 H7	48	-	-

3.1.2 Installation using fixing clamps (optional kit code ST-58-KIT)

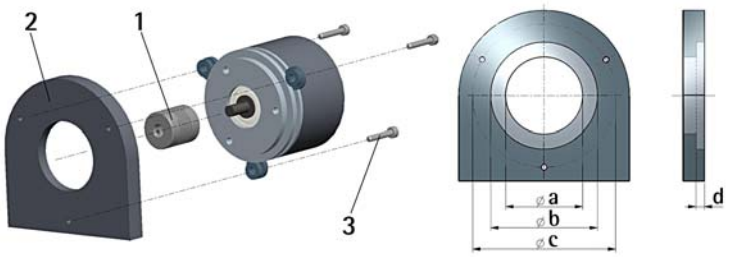

	a [mm]	b [mm]	c [mm]	d [mm]
AMT58	36 H7	-	67	-

3.1.3 Installation using a flange (code ST-58-FLNG)

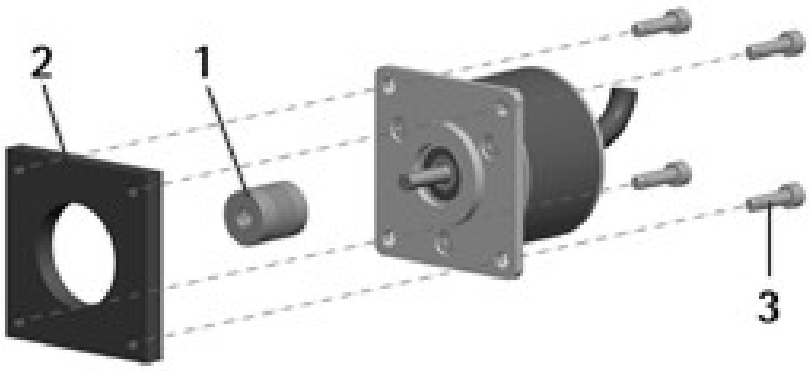

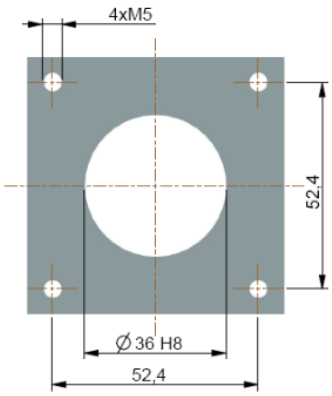

3.2 Hollow shaft encoders

3.2.1 AMT58-H15

- Mount the encoder on the motor shaft using the reducing sleeve 8 (if supplied). Avoid forcing the encoder shaft;
- fasten the fixing plate 4 to the rear of the motor using two M3 cylindrical head screws 5;
- fix the collar 3 to the encoder shaft (apply threadlocker to screw 3).

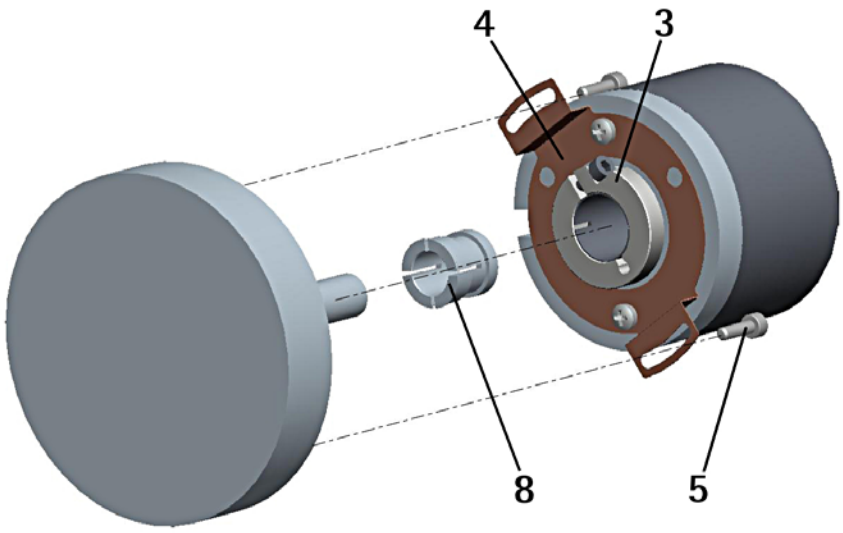

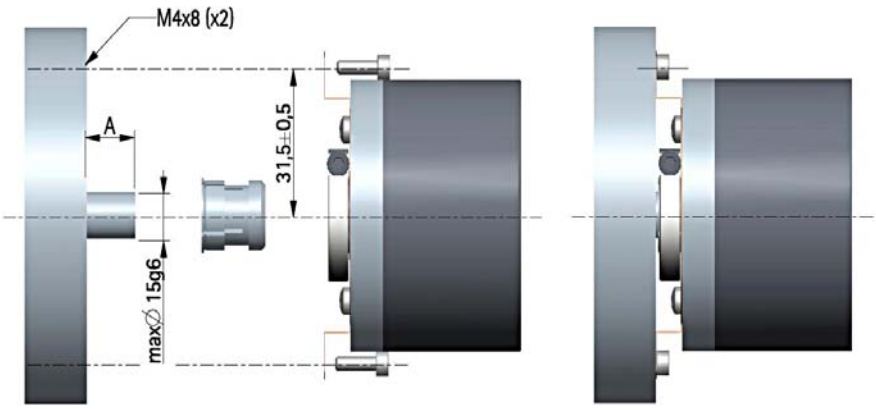

4 - Electrical connections

WARNING
Electrical connection has to be carried out by qualified personnel only, with power supply disconnected and mechanical parts compulsorily in stop.

4.1 Connection cap

WARNING
Do not remove or mount the connection cap with power supply switched ON. Damage may be caused to internal components.

The terminal connectors for connecting the power supply and the BUS IN and BUS OUT cables as well as the dip-switches meant to set the node ID and activate the termination resistance are located inside the encoder connection cap. Thus you must remove the connection cap to access any of them.

NOTE
Be careful not to damage the internal components when you perform this operation.

To remove the connection cap loosen the two screws 1.
Please be careful with the internal connector.
Always replace the connection cap at the end of the operation.
Take care in re-connecting the internal connector. Tighten the screws 1 using a tightening torque of approx. 2.5 Nm.

WARNING
You are required to check that the encoder body and the connection cap are at the same potential before replacing the connection cap!

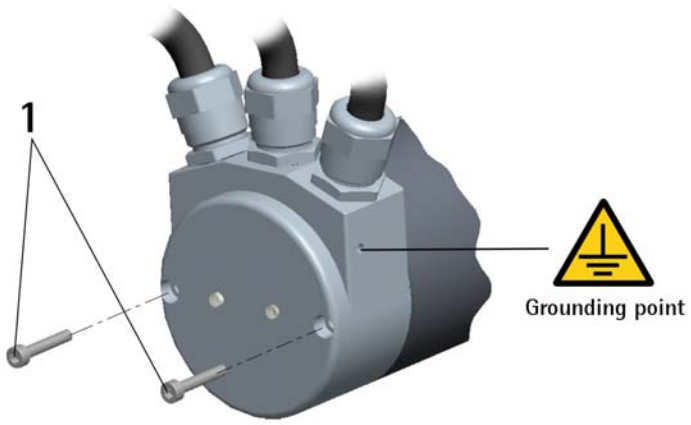

4.2 Ground connection

Minimize noise by connecting the shield and/or the connector housing and/or the frame to ground. Make sure that ground is not affected by noise. The connection point to ground can be situated both on the device side and on user's side. The best solution to minimize the interference must be carried out by the user. You are advised to provide the ground connection as close as possible to the encoder. We suggest using the ground point provided in the cap (see Figure, use 1 TCEI M3 x 6 cylindrical head screw with 2 tooth lock washers).

4.3 Connection cap with PGs (Figure 1)

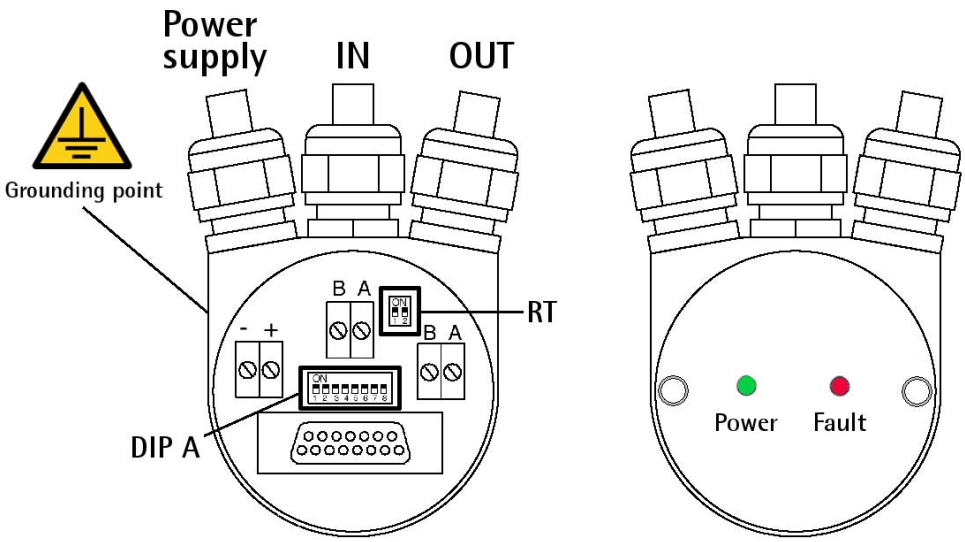

Figure 1

Connection cap is fitted with three PG9 cable glands for bus-IN, bus-OUT connections as well as power supply connection. The bus cables can be connected directly to the terminal connectors located in front of each cable gland.

We recommend Profibus-DP certificated cables to be used. Core diameter should not exceed Ø 1,5 mm (0.06 inch).

Terminal connector	Description
-	0 VDC Supply voltage
+	+10VDC +30VDC Supply voltage
B	Profibus B (Red)
A	Profibus A (Green)
PG	Shield [1]

[1] Connect the cable shield to cable gland.

4.4 Connection cap with M12 connectors (Figure 1)

Connection cap is fitted with three M12 connectors with pin-out in compliance with the Profibus standard. Therefore you can use standard Profibus cables commercially available.

Power supply
M12 connector
A coding
(frontal side)

male

Pin	Function
1	+10VDC +30VDC
3	0 VDC GND
4 [1]	Shield
Case	

[1] Shield is also connected to pin 4 to allow the connection of the shield even if the plug connector has a plastic case.

Profibus signals
M12 connector
B coding
(frontal side)

male (BUS IN) | female (BUS OUT)

Pin	Function
1	n.c.
2	Profibus A (Green)
3	n.c.
4	Profibus B (Red)
5	n.c.
Case	Shield

n.c. = not connected

4.5 Connection of the shield

Disentangle and shorten the shielding 1 and then bend it over the part 2; finally place the ring nut 3 of the connector. Be sure that the shielding 1 is in tight contact with the ring nut 3.

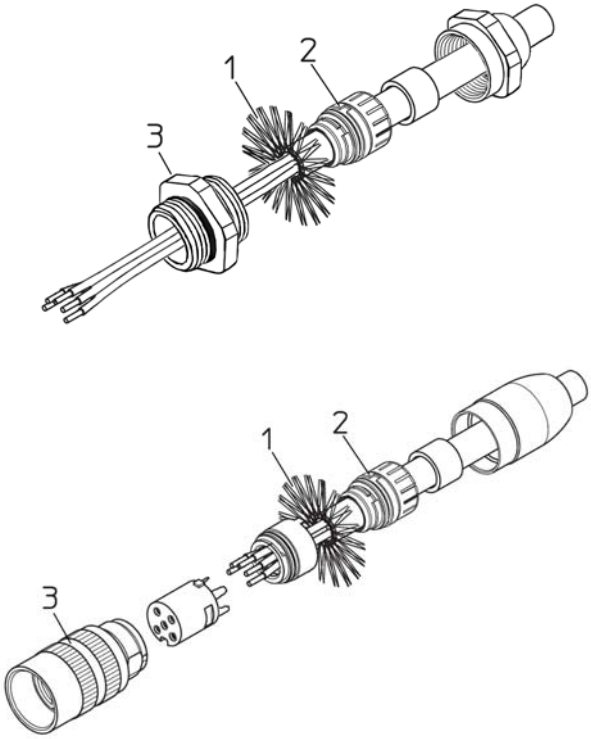

4.6 Node address: DIP A (Figure 1)

WARNING
Power supply must be turned off before performing this operation!

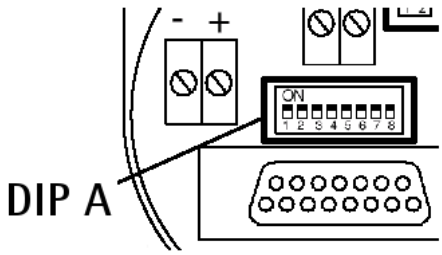

The node address must be set via hardware using the DIP A dip-switches located inside the connection cap.
Allowed addresses are from 0 to 125. The default value is 1.
The node address must be entered also in the software interface, please refer to section “5.1.2 Adding a node to the project” on page 16.

Turn the power supply off and set the node number in binary value: consider that: ON=1, OFF=0

bit	1 LSB	2	3	4	5	6	7 MSB	8 not used
	2^0	2^1	2^2	2^3	2^4	2^5	2^6	

Example
Set node number = 25:
25_{10} = 0001 1001_2 (binary value)

bit	1	2	3	4	5	6	7	8
	2^0	2^1	2^2	2^3	2^4	2^5	2^6	
	ON	OFF	OFF	ON	ON	OFF	OFF	OFF

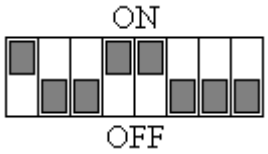

Set node number = 55:
55_{10} = 0011 0111_2 (binary value)

bit	1	2	3	4	5	6	7	8
	2^0	2^1	2^2	2^3	2^4	2^5	2^6	
	ON	ON	ON	OFF	ON	ON	OFF	OFF

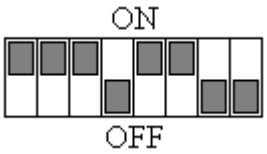

NOTE
After having set the device address, please check the bus termination switch position (see section “4.8 Bus termination (Figure 1)” on page 12).

4.7 Baud rate

The baud rate is set by the Master via software during the configuration of the node (Slave).
This device supports the following baud rates (they are listed in the .GSD file too):
9.6 kbit/s, 19.2 kbit/s, 93.75 kbit/s, 187.5 kbit/s, 500 kbit/s, 1.5 Mbit/s, 3 Mbit/s, 6 Mbit/s, 12 Mbit/s.

The following table shows the maximum transmission rates in relation to permissible line length:

Baud rate [Kbit/s]	9,6	19,2	93,75	187,5	500	1500	12000
Max. cable length	1200 m 4000 ft	1200 m 4000 ft	1200 m 4000 ft	1000 m 3300 ft	400 m 1300 ft	200 m 660 ft	100 m 330 ft

To set the baud rate please refer also to section “5.1.2 Adding a node to the project” on page 16.

4.8 Bus termination (Figure 1)

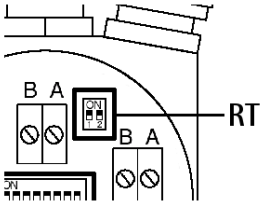

A bus termination resistance is provided inside the connection cap. This has to be activated as line termination on the last device in the transmission line.
Use the RT Switch to activate or deactivate the bus termination.

RT	Description
1 = 2 = ON	Activated: if the encoder is the last device in the transmission line
1 = 2 = OFF	Deactivated: if the encoder is not the last device in the transmission line

4.9 Diagnostic LEDs (Figure 1)

Two LEDs located in the rear side of the connection cap are designed to show the operating or fault status of the Profibus-DP interface.

Fault (red)	Power (green)	Event
OFF	OFF	Power supply is turned off or hardware breakdown not recognized
OFF	ON	Correct function (communication is on, the device is sending / receiving messages)
OFF	Flashing	The encoder is operating within the limits of the “Red Zone”, for any information see section “6.8 "Red zone"”
ON	Flashing	Configuration parameters are not valid
ON	OFF	Transmission time-out error
Flashing	ON	Bus communication failure
Flashing	Flashing	Flash memory error, unrestorable error

5 - Quick reference

5.1 Configuring the encoder via Siemens STEP7

5.1.1 Importing GSD file

Profibus encoders are supplied with their own GSD file **AMT58-xxx-13x12-PB** (see the enclosed documentation, if supplied, or click www.datalogic.com).

WARNING
Install the AMT58_Vx.GSx in the AMT58 series multiturn encoders GSD installation file is further available in both Italian (.GSI) and English (.GSE) versions (texts and comments are in the supported language).

WARNING
For AMT58 multiturn encoders the default value preset by Datalogic in the Counts per revolution item of the **AMT58-xxx-13x12-PB** GSD file is 4096 (12 bits); for this reason, if you have a 25-bit multiturn encoder and you want to use the overall resolution, you must set the Counts per revolution item to 8192 (13 bits). See EXAMPLE 2 on page 20.

In the main window HW Config of STEP7 select Install GSD File… command from Options menu bar.
In the window that appears you can select the GSD file specific to the unit you need to install in your Siemens control system.
Choose among the available files the one you need: GSD file for AMT58 multiturn encoder, in either Italian or English language.

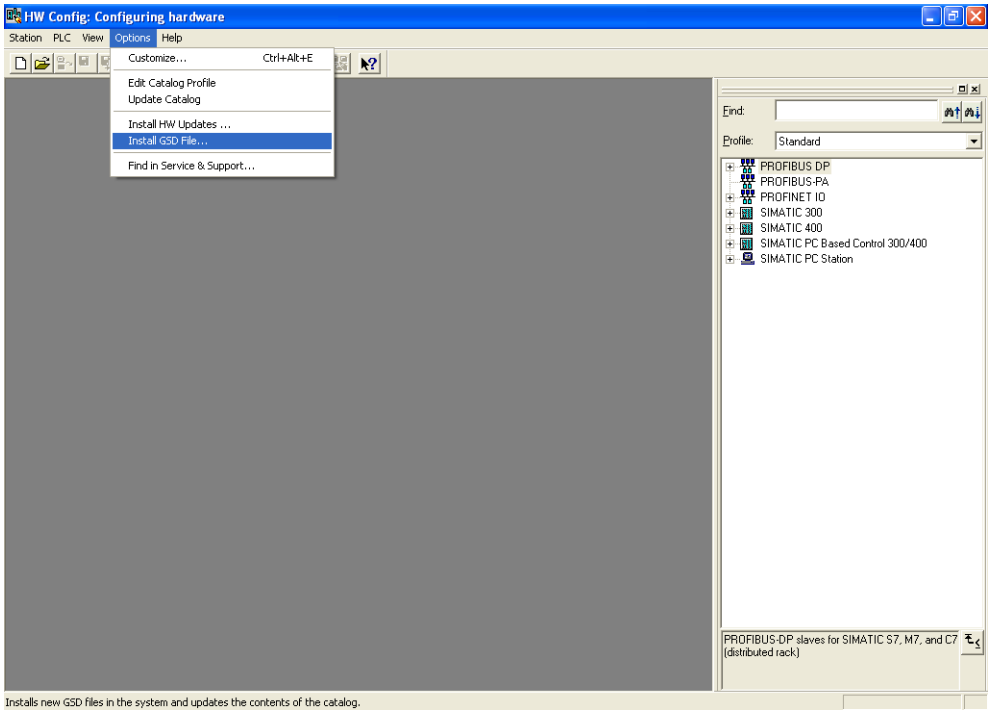

5.1.2 Adding a node to the project

To add a node to the project, extend the directory tree in the right panel of the STEP7 HW Config main window and select either the AMT58 module available in Catalog > PROFIBUS-DP > Additional Field Devices > Encoders (if both GSD files have been installed); drag the required module to the pane on the left and drop it on the “BUS”. For instance, drag the AMT58 module.

Then drag the AMT58 Class 1 or the AMT58 Class 2 submodule to the variables table in the bottom left; for instance, install the AMT58 Class 2 submodule. In this way you set the class of the device (for further details on available classes see section “6.2 Classes of the Device profile” on page 29).

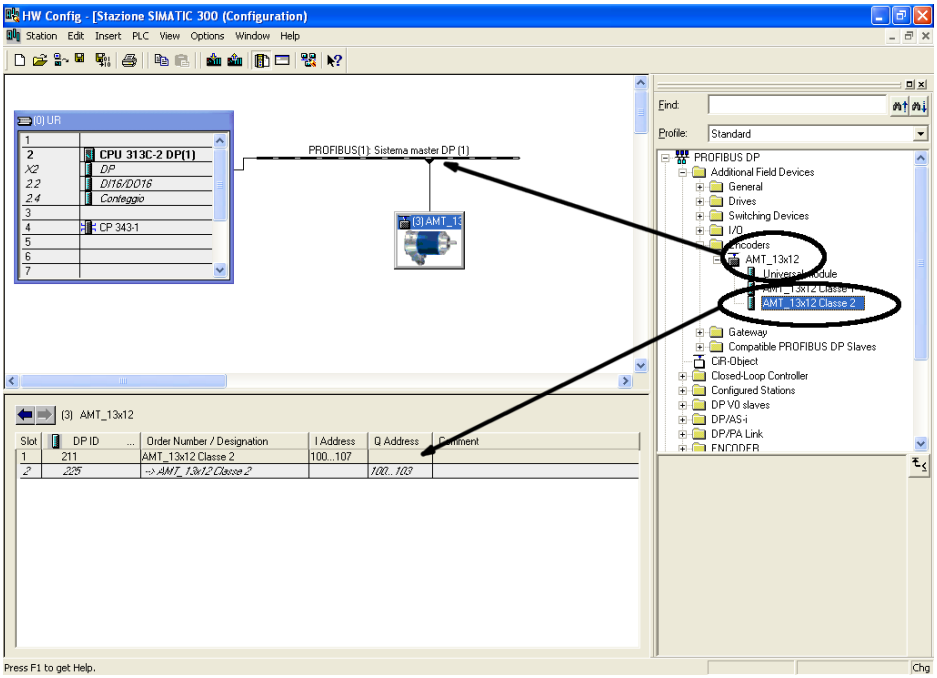

After having installed the node, by double-clicking on the graphic icon of the unit you have just installed you enter the page designed to configure the bus properties. In this page you can both enter the node address configured via hardware and set the bus transmission rate. For any information on setting the node address via hardware please refer to the section “4.6 Node address: DIP A (Figure 1)” on page 10. For any information on setting the baud rate please refer to the section “4.7 Baud rate” on page 11.

5.1.3 Encoder configuration parameters

To access the parameters configuration window, first enter the STEP7 HW Config main window and select the AMT58 item just installed (AMT58 Class 2 in the example) available in the variables table in the bottom left; then right-click the item and press the Object Properties... command in the shortcut menu.

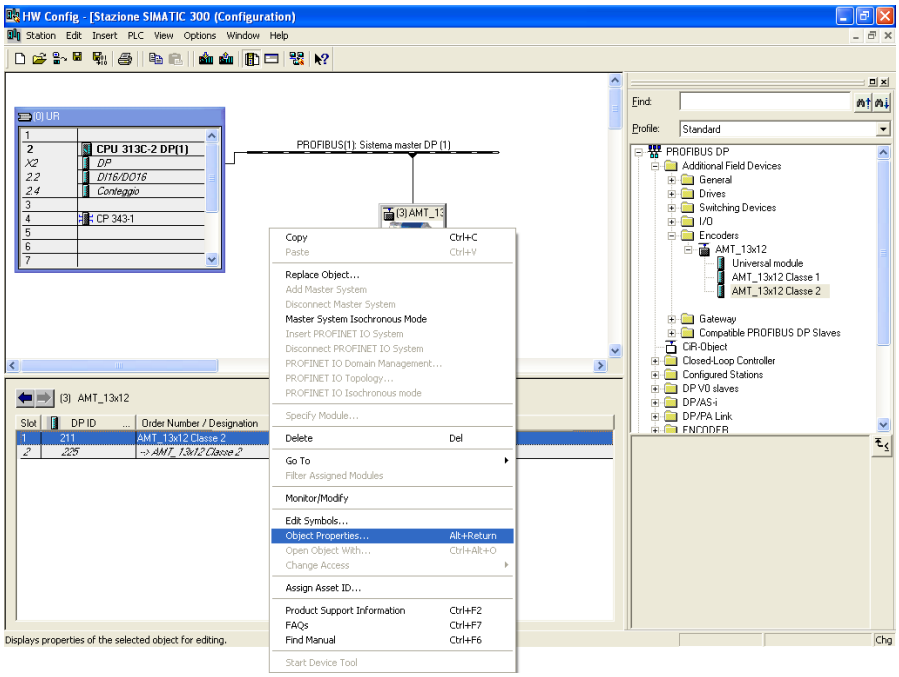

The Properties - DP slave window will appear. In the Parameter Assignment page all configuration data parameters available for the device are listed.
For a comprehensive description of the parameters and how to set them properly refer to the specific explanation in section “6.4 DDLM_Set_Prm” on page 31.

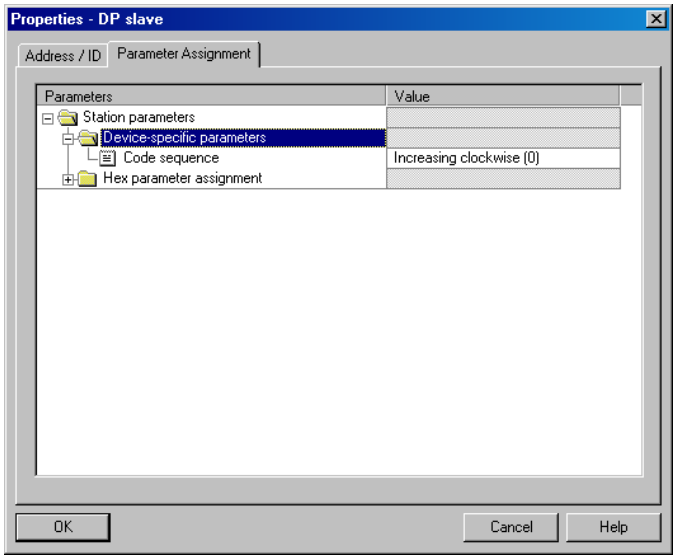

Class 1 example

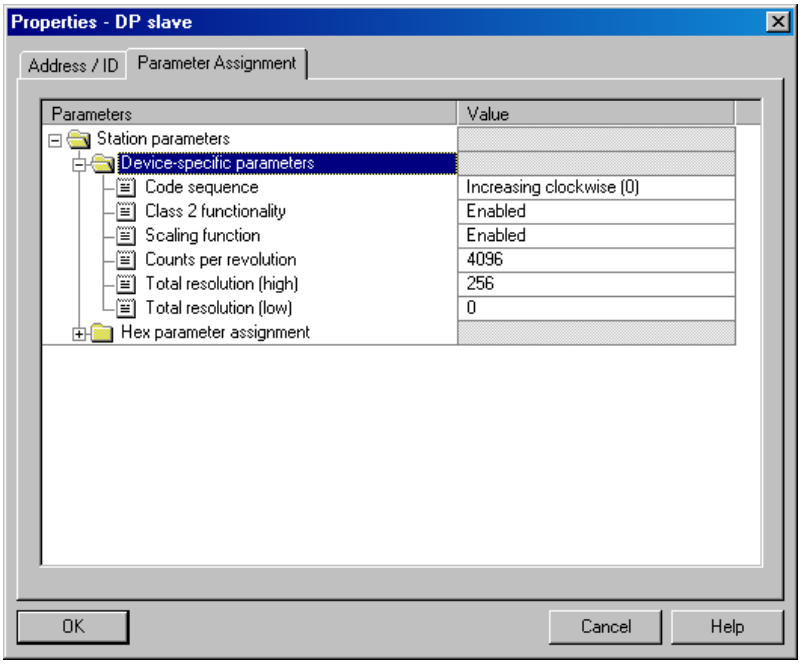

Class 2 example

In the Parameter Assignment page, some items (Code sequence, Class 2 functionality, Scaling function) are to be set by scrolling through the available options in the drop-down box. While the parameters concerning the resolution must be entered in decimal notation. Please note that the Total resolution value has to be split into two separate fields, namely Total resolution (high) and Total resolution (low). This value in fact must be entered in two words. Please refer to the following examples to understand how the Total resolution value has to be divided into two parts: a high part and a low part.

WARNING
You can set new values next to the Counts per revolution and Total resolution items only if Class 2 functionality = ENABLED; if Scaling function = ENABLED the set resolution values are enabled and used by the encoder; on the contrary, if Scaling function = DISABLED you are allowed to set new resolution values, however they are not enabled even if sent to the encoder: the encoder still goes on using the default values uploaded from the GSD file, NOT the new entered values, until you enable the Scaling function.

EXAMPLE 1

Let's suppose we need to program the following encoder:
“AMT58” 24-bit multiturn encoder.

- Hardware counts per revolution = 12 bits/rev. (4096 cpr)
- Hardware number of revolutions = 12 bits (4096 rev.)
- Hardware total resolution = 24 bits (4096 ∗ 4096=16777216)

We want to set: 4096 counts per revolution and 4096 revolutions.
Thus we will set 4096 next to the Counts per revolution item.
The Total resolution value will be: 4096 (cpr) ∗ 4096 (rev.) = 16777216_{10} = 0x1000000
The value to be set in the Total resolution items will be as follows:

Total resolution (high)	Total resolution (low)	Value
0100	0000	hexadecimal
256	0	decimal

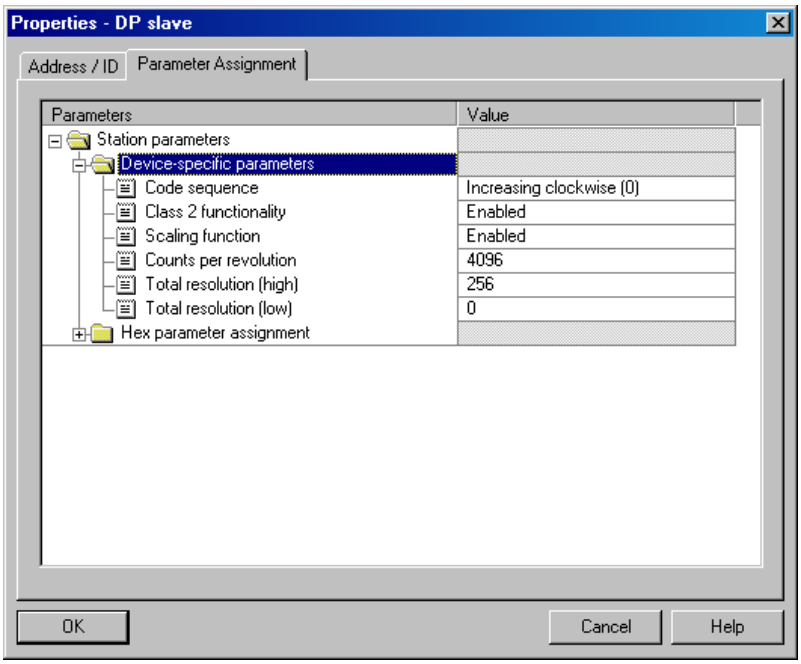

EXAMPLE 2

Let's suppose we need to program the following encoder:
“AMT58” 25-bit multiturn encoder.

- Hardware counts per revolution = 13 bits/rev. (8192 cpr)
- Hardware number of revolutions = 12 bits (4096 rev.)
- Hardware total resolution = 25 bits (8192 ∗ 4096=33554432)

We want to set: 8192 counts per revolution and 4096 revolutions.
Thus we will set 8192 next to the Counts per revolution item.
The Total resolution value will be: 8192 (cpr) ∗ 4096 (rev.) = 33554432_{10} = 0x2000000
The value to be set in the Total resolution items will be as follows:

Total resolution (high)	Total resolution (low)	Value
0200	0000	hexadecimal
512	0	decimal

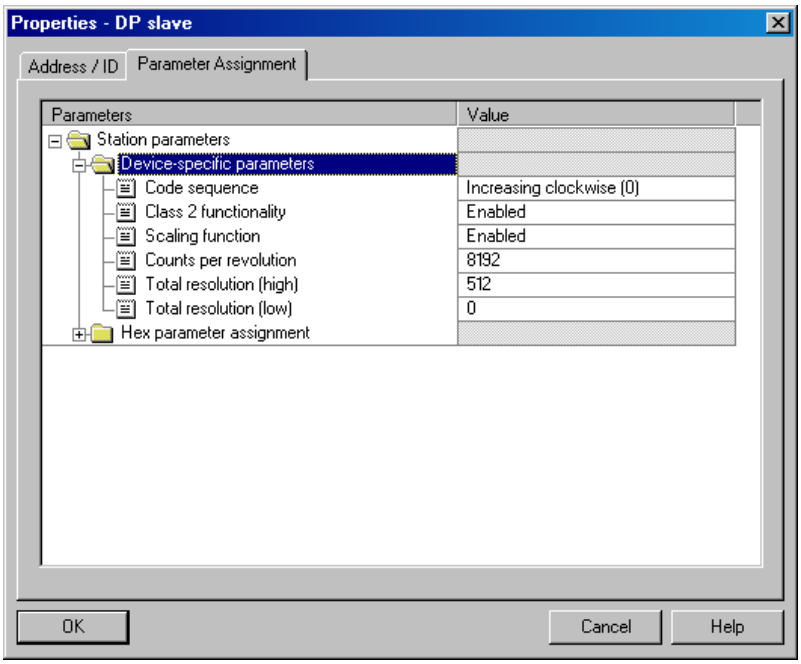

WARNING
When you set a new value next to the Counts per revolution item, please always check also the Total resolution items value and be sure that the resulting number of revolution complies with the Hardware number of revolutions of the device.
The same when you set a new value next to the Total resolution items, please always check also the Counts per revolution item and be sure that the resulting number of revolution complies with the Hardware number of revolutions of the device.

Let's say our encoder is programmed as in EXAMPLE 2EXAMPLE :

Counts per revolution: 8192
Total resolution= 33554432_{10} = 8192 (cpr) * 4096 (rev.), so: Total resolution (high) = 512; Total resolution (low) = 0

Let's set a new singleturn resolution, for instance: Counts per revolution = 360.
If we do not change the Total resolution value at the same time, we will get the following result:

$$\text{Number of revolutions} = \frac{\begin{array}{c}33554432\\ \text{(Total resolution)}\end{array}}{\begin{array}{c}360\ \text{(Counts per}\\ \text{revolution)}\end{array}} = 93206.755...$$

As you can see, the encoder is required to carry out more than 93000 revolutions, this cannot be as the hardware number of revolutions is, as stated, 4096. When this happens, the encoder falls into an error signalling the faulty condition through the diagnostic LEDs (see on page 13).

You are allowed to set any integer value less than or equal to the Hardware counts per revolution in the Counts per revolution item; while you are allowed to set any integer value less than or equal to the Hardware counts per revolution in the Counts per revolution item; however we suggest always setting values that are a power of 2 (1, 2, 4, …2048, 4096, …).

EXAMPLE 3

Let's suppose we need to program the following encoder:
“AMT58” 25-bit multiturn encoder.

- Hardware counts per revolution = 13 bits/rev. (8192 cpr)
- Hardware number of revolutions = 12 bits (4096 rev.)
- Hardware total resolution = 25 bits (8192 ∗ 4096=33554432)

- Hardware counts per revolution = 13 bits/rev. (8192 cpr)

We want to set: 2048 counts per revolution and 1024 revolutions.
Thus we will set 2048 next to the Counts per revolution item.
The Total resolution value will be: 2048 (cpr) ∗ 1024 (rev.) = 2097152_{10} = 0x200000
The value to be set in the Total resolution items will be as follows:

Total resolution (high)	Total resolution (low)	Value
0020	0000	hexadecimal
32	0	decimal

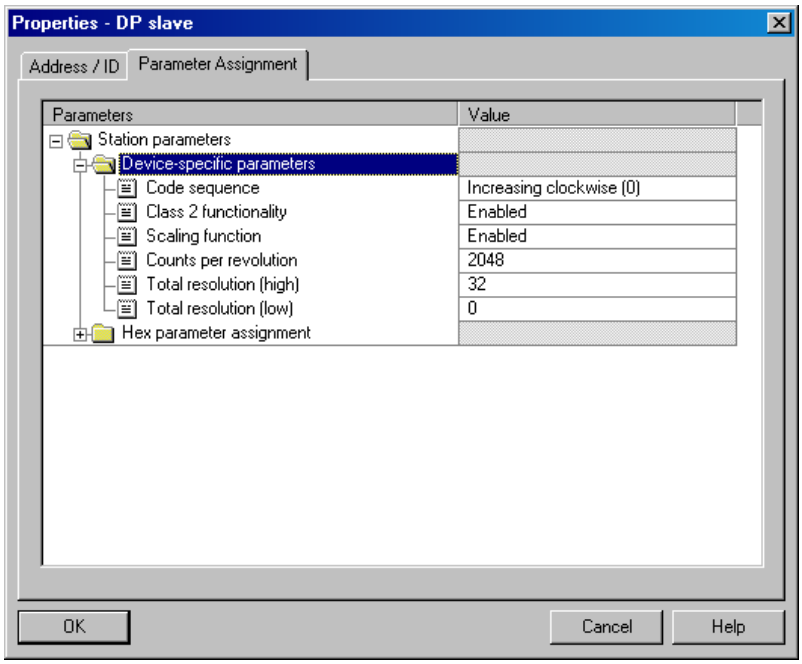

WARNING
We recommend the Number of revolutions to be set to a value that is a power of 2. If the set number of revolutions is not a power of 2, the so-called “Red Zone” will be created and the encoder will necessarily work inside its limits. For any information on the "Red Zone" refer to section “6.8 "Red zone"” on page 41.

EXAMPLE 4

Let's suppose we need to program the following encoder:
“AMT58” 24-bit multiturn encoder.

- Hardware counts per revolution = 12 bits/rev. (4096 cpr)
- Hardware number of revolutions = 12 bits (4096 rev.)
- Hardware total resolution = 24 bits (4096∗4096=16777216)

We want to set: 4096 counts per revolution and 50 revolutions.
50 is NOT a power of 2.
Thus we will set 4096 next to the Counts per revolution item.
The Total resolution value will be: 4096 (cpr) ∗ 50 (rev.) = 204800_{10} = 0x32000
The value to be set in the Total resolution items will be as follows:

Total resolution (high)	Total resolution (low)	Value
0003	2000	hexadecimal
3	8192	decimal

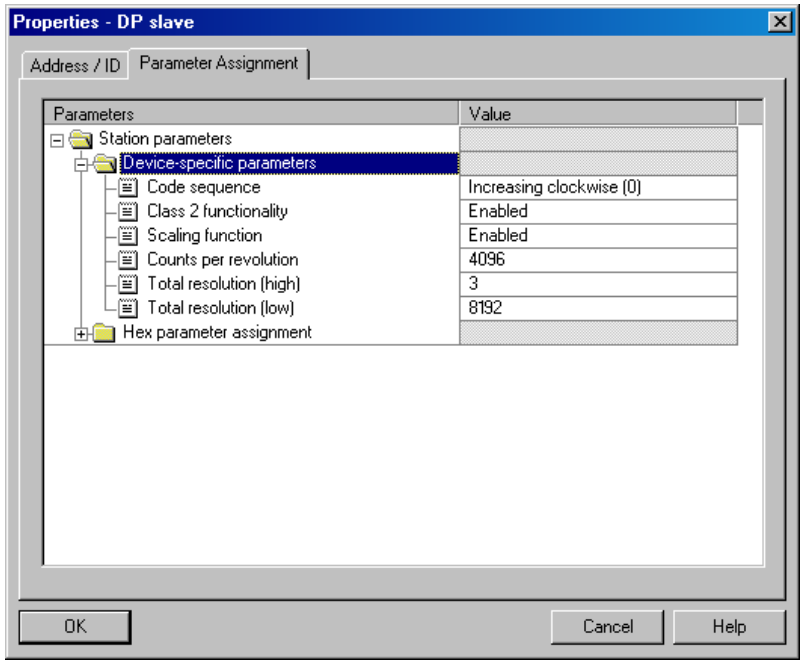

EXAMPLE 5

Let's suppose we need to program the following encoder:
“AMT58” 25-bit multiturn encoder.

- Hardware counts per revolution = 13 bits/rev. (8192 cpr)
- Hardware number of revolutions = 12 bits (4096 rev.)
- Hardware total resolution = 25 bits (8192 ∗ 4096=33554432)

We want to set: 360 counts per revolution and 4000 revolutions.
Neither 360 nor 4000 is a power of 2.
Thus we will set 360 next to the Counts per revolution item.
The Total resolution value will be: 360 (cpr) ∗ 4000 (rev.) = 1440000_{10} = 0x15F900
The value to be set in the Total resolution items will be as follows:

Total resolution (high)	Total resolution (low)	Value
0015	F900	hexadecimal
21	63744	decimal

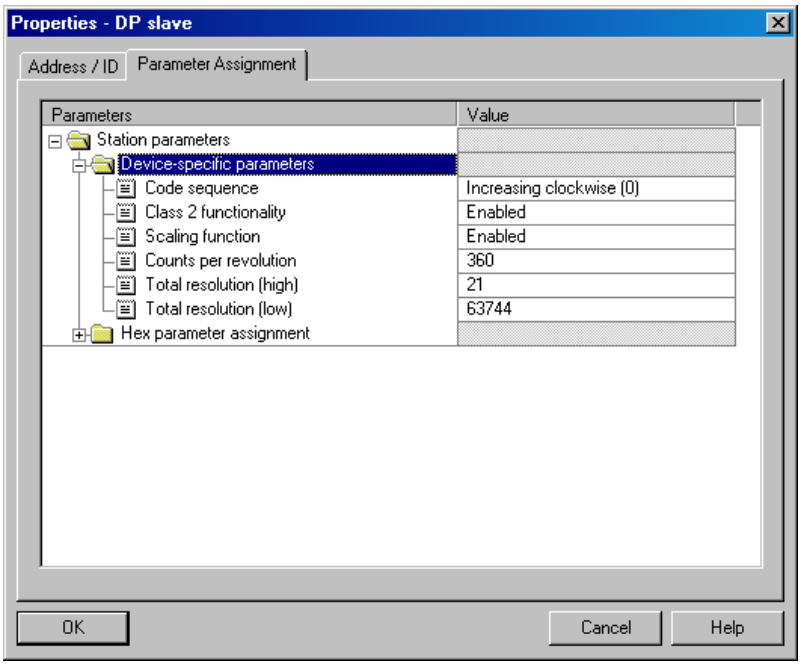

After having set new parameter values, click the OK button to close the Properties – DP Slave window and then the Download button (see icon on the left) in the toolbar of the HW Config window to download the set parameters.

5.2 Reading the diagnostic information

Datalogic encoder provides the standard diagnostic information. The diagnostic information message is 6-byte long. For any information on the DP Slave diagnostics please refer to the “Profibus Specification” document.

Before entering the diagnostic page, it is necessary to connect to the unit (i.e. enter the online status). To do this, select Station\Open online in the HW Config window or click the Online<->Offline button (see the icon on the left). When the unit is online, select the AMT58 module first and then the PLC\Module Information... command to enter the Module Information window. Finally open the DP Slave Diagnostics page.

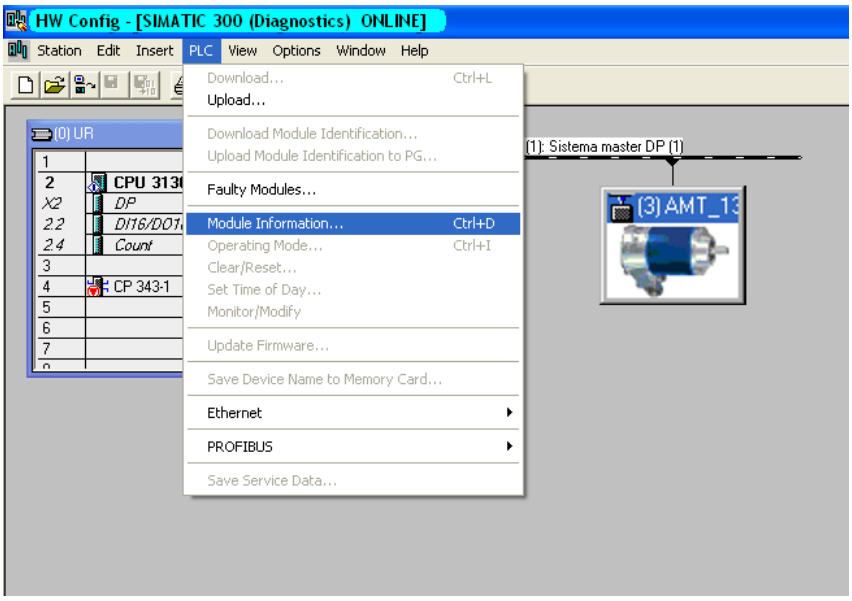

Click the Hex Format… button to display the diagnostic information:

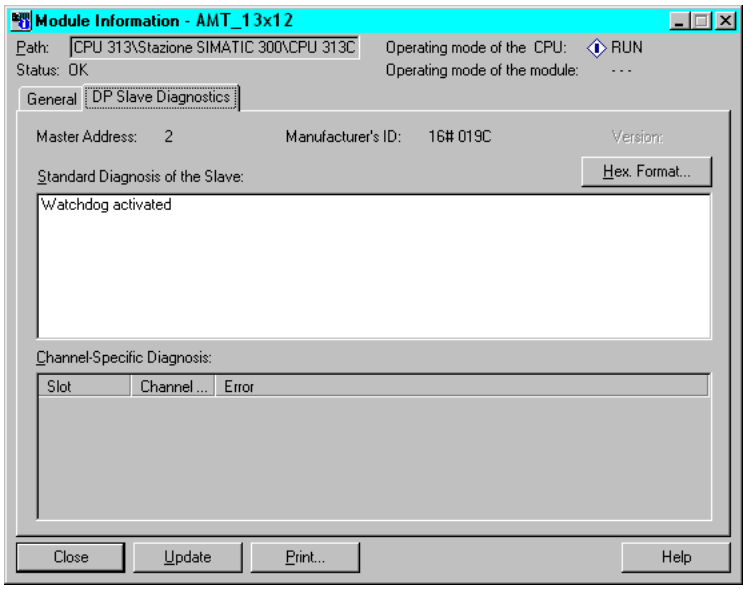

6-byte diagnostics

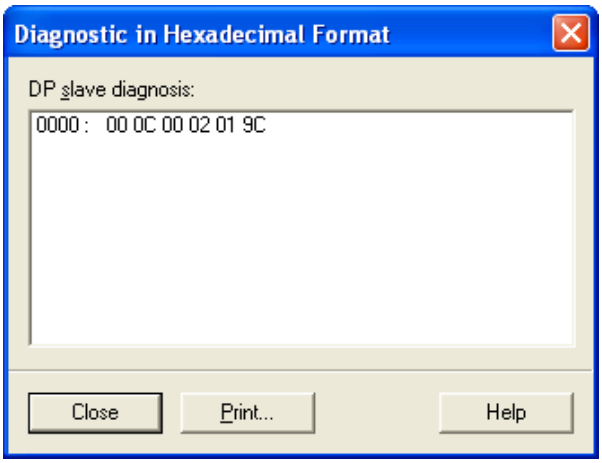

Byte	Description
0	status 1
1	status 2
2	status 3
3	Master ID
4	manufacturer ID
5	

5.3 Setting the Preset value

Example
The encoder having device address 1 transmits the Position value to the Master.
It is loaded into variables ED 100 … ED103 (4 bytes).
The Preset value is sent to the encoder by using the variables AD 100 … AD103 (4 bytes).

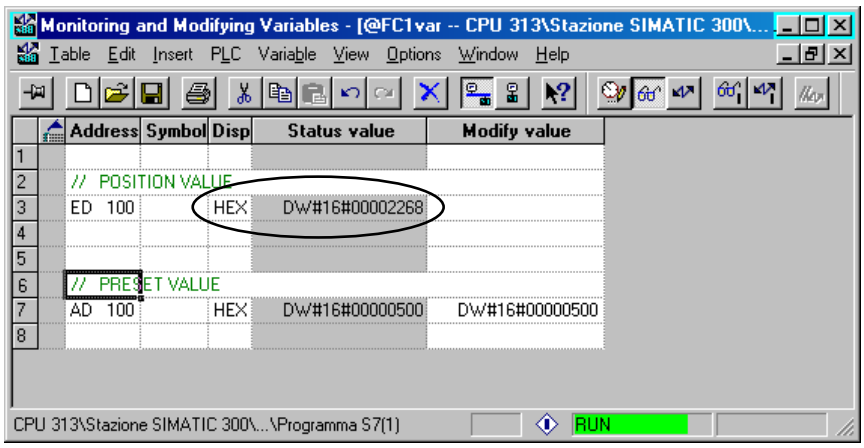

The current position of the encoder is 0000 2268hex.
To set the Preset value = 0000 0500hex, set the bit 31 of the variable AD 100 = “1” (8000 0500hex). See also the example in the paragraph “Preset” on page 38.

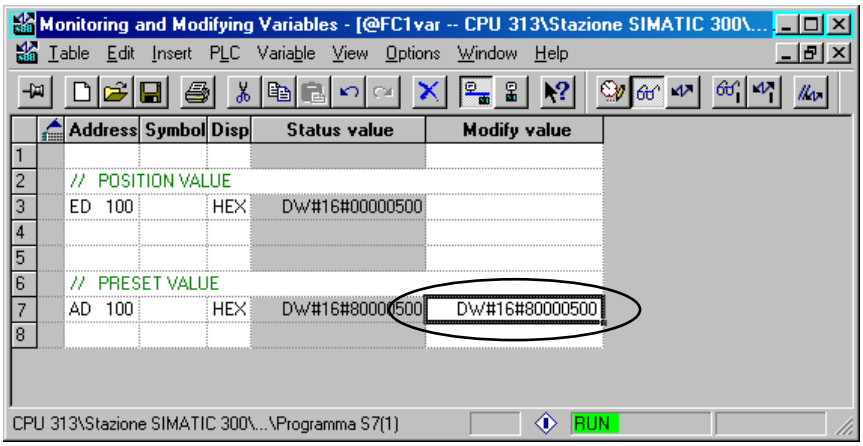

Finally click the Command variables button in the Toolbar (see the right icon).

Now the position of the encoder is 0000 0500hex.
To close the “Preset” procedure set the bit 31 of the variable AD 100 back to ”0” and then click the Command variables button again.

NOTE
It may occur that some data variables having index higher than 127 or data greater than 4 bytes are not treated properly in STEP7 software. Should this happen, we recommend "MD" reference operators (pointers) to be used for encoder position and Preset value.

6 - Profibus interface

Datalogic units are slave devices and comply with the “Profibus-DP Profile for Encoders”; they can be set to either Class 1 or Class 2 devices (see section “6.2 Classes of the Device profile” on page 29).
Refer to the official Profibus website for any information not reported in this manual (www.profibus.com).

6.1 GSD file

Profibus encoders are supplied with their own GSD file Ax58_Vx.GSx (see the enclosed documentation, if supplied, or click www.datalogic.com).

WARNING
Install the AMT58-xxx-13x12-PB.GSx in the AMT58 series multiturn encoders.
Vx is intended to indicate the GSD file version.
GSD installation file is further available in both Italian (AMT58-xxx-13x12-PB.GSI) and English (AMT58-xxx-13x12-PB.GSE) versions (texts and comments are in the supported language).

WARNING

For AMT58 multiturn encoders the default value preset by Datalogic in the Counts per revolution item of the AMT58-xxx-13x12-PB.GSx GSD file is 4096 (12 bits); for this reason, if you have a 25-bit multiturn encoder and you want to use the overall resolution, you must set the Counts per revolution item to 8192 (13 bits).

6.2 Classes of the Device profile

The encoder class must be set when you configure the device.
See also the Class 2 functionality operating parameter on page 32.

Class 1 allows basic functions of the device and can be used:

- to send the position information (see the Position parameter);
- to change the counting direction (see the Code sequence parameter);
- to set the preset value (see the Preset parameter).

Class 2 allows to use all Class 1 functions and further extended functions, they are:

- scaling function (see the Scaling function parameter).

6.3 Operating modes

Profibus-DP devices allow operation using different communication modes (see Figure below):

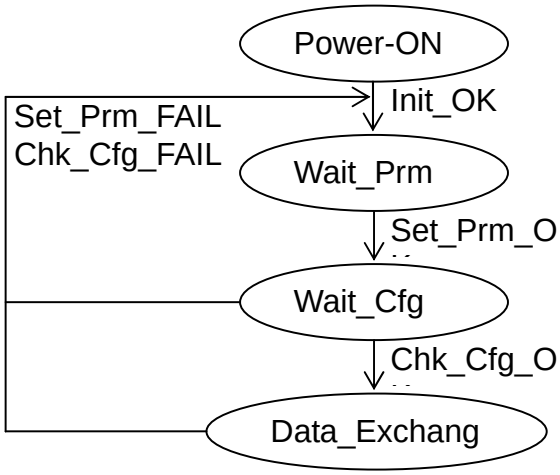

NOTE
All parameters are transmitted when the Set_Prm mode is active with the exception of the Preset value.
Preset value is transmitted only when the unit is in Data_Exchange mode.

Types of communication messages

Transmission of data between Master and Slave is carried out using the following types of messages:

- **DDLM_Set_Prm:**
  Used for configuring the Slave. This communication mode is active immediately after power is turned ON and is used to send parameters from the Master to the Slave (see the section “6.4 DDLM_Set_Prm” on page 31).

- **DDLM_Chk_Cfg:**
  It sets the number of bytes used for data transmission in Data_Exchange mode (see section “6.5 DDLM_Chk_Cfg” on page 37).

- **DDLM_Data_Exchange:**
  This is the "standard operation mode".
  It is used either by the Master to send the Preset value and by the Slave to transmit the Position value (see the section “6.6 DDLM_Data_Exchange“ on page 38).

- **DDLM_Slave_Diag:**
  It is used when the power is turned on and whenever the Master needs to know diagnostic information from the Slave device (see the section “6.7 DDLM_Slave_Diag” on page 40).

6.4 DDLM_Set_Prm

When the system is turned on, configuration data set by the operator is sent to the absolute encoder by the controller (DDLM_Set_Prm mode). Parameters transmission depends on the configuration chosen by the operator. Customarily data is sent automatically while data setting is carried out through a user's interface available in the controller's software (for instance, STEP7, see section “5.1 Configuring the encoder via Siemens STEP7“ on page 14).
However sometimes it is necessary to set some bits and bytes according to the working specifications you want to set.
Data transmission is carried out according to the specifications of the encoder profile, as shown in the following tables.

DDLM_Set_Prm:

Byte	Parameter	
0 … 9	Reserved for PROFIBUS network	
10	Operating parameters	
	bit 0	Code sequence
	bit 1	Class 2 functionality
	bit 2	Reserved
	bit 3	Scaling function
	Bits 4 … 7	Reserved
11 … 12	Counts per revolution	
13 … 16	Total resolution	
17 … 20	Reserved	

6.4.1 Byte 10 - Operating parameters

Bit	Function	bit = 0	bit = 1
0	Code sequence	CW	CCW
1	Class 2 functionality	disabled	enabled
2	Reserved		
3	Scaling function	disabled	enabled
4, 5, 6, 7	Reserved		

Default values are highlighted in bold.

Code sequence

The Code sequence parameter defines whether increasing position values are output when the encoder shaft rotates clockwise (CW) or when the encoder shaft rotates counter-clockwise (CCW). When Code sequence = CW (0) the position information increases as the encoder shaft rotates clockwise; on the contrary, when Code sequence = CCW (1) the position information increases as the encoder shaft rotates counter-clockwise CW and CCW rotations are viewed from the shaft end.
If Class 2 functionality = DISABLED, this is the only parameter which can be set.
Default = 0 (min. = 0, max. = 1)

Class 2 functionality

Two device classes are defined in the encoder profile, one mandatory class (Class 1) and one class with optional functions (Class 2). This encoder implements functions of both Class 1 and Class 2. For any information on the available encoder classes see the section “6.2 Classes of the Device profile” on page 29.
0 = Disabled = Encoder Class 1 is set.
1 = Enabled = Encoder Class 2 is set.
Default = 1 (min. = 0, max. = 1)

Scaling function

When this option is disabled (Scaling function = 0), the device uses the hardware resolution, i.e. the hardware counts per revolution and the hardware number of revolutions, see the encoder data on the label applied to the device; when the option is enabled (Scaling function = 1), the device uses the resolution set in the bytes 11 … 16 (Counts per revolution and Total resolution).
For a correct use of this function see sections “6.4.2 Bytes 11 - 12“ e “6.4.3 Bytes 13 … 16“ below in the page.
Default = 1 (min. = 0, max. = 1)

WARNING
You can set new values next to the Counts per revolution and Total resolution items only if Class 2 functionality = ENABLED; if Scaling function = ENABLED the set resolution values are enabled and used by the encoder; on the contrary, if Scaling function = DISABLED you are allowed to set new resolution values, however they are not enabled even if sent to the encoder: the encoder still goes on using the default values uploaded from the GSD file, NOT the new entered values, until you enable the Scaling function.

6.4.2 Bytes 11 - 12
Counts per revolution

WARNING
You can set a new value next to this Counts per revolution item only if Class 2 functionality = ENABLED; if Scaling function = ENABLED the set resolution value is enabled and used by the encoder; on the contrary, if Scaling function = DISABLED you are allowed to set a new resolution value, however it is not enabled even if sent to the encoder: the encoder still goes on using the default value uploaded from the GSD file, NOT the new entered value, until you enable the Scaling function. See the section “6.4.1. Byte 10 – Operating parameters” on page 31.

Counts per revolution parameter allows to program a user specific singleturn resolution (i.e. the desired number of information per revolution).

Byte	11	12
Bits	15-8	7-0
Data	2^{15} to 2^{8}	2^{7} to 2^{0}

You are allowed to set any integer value less than or equal to the Hardware counts per revolution. However we suggest setting a value that is a power of 2 (1, 2, 4, … 2048, 4096, ...).
Default = 4096 (min. = 1, max. = 8192) for AMT58 multiturn encoder

WARNING
If you set a value greater than the maximum allowed value (i.e. greater than the Hardware counts per revolution value), the encoder falls into an error signalling the faulty condition through the diagnostic LEDs (see on page 13).

WARNING
When you set a new value next to the Counts per revolution item, please always check also the Total resolution item value and be sure that the resulting number of revolution complies with the Hardware number of revolutions of the device.
Let's say our encoder is programmed as follows:
Counts per revolution: 8192
Total resolution= 33554432_{10} = 8192 (cpr) * 4096 (rev.)
Let's set a new singleturn resolution, for instance Counts per revolution= 360.
If we do not change the Total resolutionvalue at the same time, we will get the following result:

$$\text{Number of revolutions} = \frac{33554432\ (\text{Total resolution})}{360\ (\text{Counts per revolution})} = 93206.755...$$

As you can see, the encoder is required to carry out more than 93000 revolutions, this cannot be as the hardware number of revolutions is, as stated, 4096. When this happens, the encoder falls into an error signalling the faulty condition through the diagnostic LEDs (see on page 13).

6.4.3 Bytes 13 … 16
Total resolution

WARNING
You can set a new values next to this Total resolution item only if Class 2 functionality = ENABLED; if Scaling function = ENABLED the set resolution value is enabled and used by the encoder; on the contrary, if Scaling function = DISABLED you are allowed to set a new resolution value, however it is not enabled even if sent to the encoder: the encoder still goes on using the default value uploaded from the GSD file, NOT the new entered value, until you enable the Scaling function See the section section “6.4.1. Byte 10 – Operating parameters”.

This parameter is intended to set the number of distinguishable steps over the total measuring range. The total resolution of the encoder results from the product of Counts per revolution by Number of revolutions.

Byte	13	14	15	16
Bit	31-24	23-16	15-8	7-0
Data	2^{31} to 2^{24}	2^{23} to 2^{16}	2^{15} to 2^{8}	2^{7} to 2^{0}

You are allowed to set any integer value less than or equal to the Hardware total resolution. However we suggest setting a value that is a power of 2.
Default = 16777216 (min. = 1, max. = 33554432) for AMT58 multiturn encoder

NOTE
Please note that

Number of revolutions is: $\frac{\text{Total resolution}}{\text{Counts per revolution}}$

WARNING
If you set a value greater than the maximum allowed value (i.e. greater than the Hardware total resolution value), the encoder falls into an error signalling the faulty condition through the diagnostic LEDs (see on page 13).

WARNING
When you set a new value next to the Total resolution item, please always check also the Counts per revolution item value and be sure that the resulting number of revolution complies with the Hardware number of revolutions of the device.

Let's say our encoder is programmed as follows:
Counts per revolution: 8192
Total resolution = 33554432_{10} = 8192 (cpr) * 4096 (rev.)
Let's set a new total resolution, for instance: Total resolution = 360.
As the Total resolution must be greater than or equal to the Counts per revolution, the above setting is not allowed. When this happens, the encoder falls into an error signalling the faulty condition through the diagnostic LEDs (see on page 13).

WARNING
We recommend the Number of revolutions to be set to a value that is a power of 2. If the set number of revolutions is not a power of 2, the so-called “Red Zone” will be created and the encoder will necessarily work inside its limits. For any information on the "Red Zone" refer to section “6.8 "Red zone"” on page 41.

WARNING
The AMT58 multiturn encoder can be configured so that it works exactly as the singleturn encoder.
This is achieved by setting Total resolution = Counts per revolution.
Let's suppose the encoder is set as follows:
Counts per revolution= 8192
Total resolution = 8192

So it follows that:

$$\text{Number of revolutions} = \frac{8192\ (\text{Total resolution})}{8192\ (\text{Counts per revolution})} = 1$$

This is exactly the configuration of the singleturn encoder.
It is of course obvious that the contrary is not possible.

Example
multi-turn encoder with 24-bit resolution
- Hardware counts per revolution = 12 bit/turn (4096 cpr)
- Hardware number of revolutions = 12 bit (4096 rev.)
- Hardware total resolution = 24 bit (4096 ∗ 4096 = 16777216)

multi-turn encoder with 25-bit resolution
- Hardware counts per revolution = 13 bit/turn (8192 cpr)
- Hardware number of revolutions = 12 bit (4096 rev.)
- Hardware total resolution = 25 bit (8192 ∗ 4096 = 33554432)

Example
Multiturn encoder AMT58 with connection cap.

The hardware resolution is:

- Hardware counts per revolution = 4096 (2^{12})
- Hardware number of revolutions = 4096 (2^{12})
- Hardware total resolution = 16777216 (2^{24})

We need to set the following custom resolution: 2048 counts per revolution ∗ 1024 revolutions.
To do this proceed as follows:

- Enable Class 2 functionality: byte 10=0A hex (bit 1=bit 3= “1”)
- Enable Scaling function:
- Counts per revolution = 2048: bytes 11-12 = 0800 hex
- = 2048 ∗ 1024 = 2097152: bytes 13 … 16 = 0020 0000 hex.

NOTE
When new values are set next to the Counts per revolution and/or Total resolution items, also a new Preset value is required. It has to comply with the new resolution you have set.

WARNING
Please note that the in Step 7 the Total resolution value has to be split into two separate fields, namely Total resolution (high) and Total resolution (low). This value in fact must be entered in two words. Please refer to the examples on page 19 to understand how the Total resolution value has to be divided into two parts: a high part and a low part.
The following values are allowed:
multiturn model
Total resolution (high): default = 256 (min. = 0, max. = 512)
Total resolution (low): default = 0 (min. = 0, max. = 65535)

6.5 DDLM_Chk_Cfg

The configuration function allows the Master to send the configuration data to the Slave for any check operation. The main purpose of this function is to define the number of bytes used for the Data_Exchange as viewed from the Master side.

Chk_Cfg message structure (1 byte):

bit 7 = Consistency (= ”1”)
bit 6 = Word format (“0” = byte, “1” = word = 4 bytes)
bits 5 - 4 = In/out data (“01” = Input, ”10” = Output)
bits 3 … 0 = Length code

Example

bit	7	6	5	4	3	2	1	0	
Dat	1	1	0	1	0	0	0	1	D1h
a	1	1	1	0	0	0	0	1	E1h

D1hex = 4-byte input
E1hex = 4-byte output

6.6 DDLM_Data_Exchange

This is the normal operational status of the system. The Slave (no matter if set to Class 1 or Class 2) can both transmit the Position value to the Master and receive the Preset value from the Master.

Position

(Encoder → Master)

Byte	1	2	3	4
Bit	31-24	23-16	15-8	7-0
Data	2^{31} to 2^{24}	2^{23} to 2^{16}	2^{15} to 2^{8}	2^{7} to 2^{0}

This is the position information output by the encoder. The value is right aligned in the data field.

Preset

(Master → Slave)

Byte	1	2	3	4
Bit	31-24	23-16	15-8	7-0
Data	2^{31} to 2^{24}	2^{23} to 2^{16}	2^{15} to 2^{8}	2^{7} to 2^{0}

The Preset function is meant to assign a desired value to a physical position of the encoder. The chosen physical position will get the value set next to this item and all the previous and following positions will get a value according to it. This function is useful, for example, when the zero position of the encoder and the zero position of the axis need to match. The preset value will be set for the position of the encoder in the moment when the preset value is sent. The Preset value is sent by the Master to the Slave in Data_Exchange mode by setting bit 31 = “1” for 3 cycles.
The MSB of the preset value controls the preset function in the following way:
Normal operating mode: MSB = 0 (bit 31): the encoder will make no change in preset value.
Preset mode: MSB = 1 (bit 31): with the MSB = 1 the encoder accepts the transferred value (bits 0 ... 30) as a preset value in binary code.

- If Scaling function = DISABLED, then
  Presetmust be less than the Hardware total resolution.

- If Scaling function = ENABLED, then
  Preset must be less than the Total resolution

Example

Preset value to be set = 0000 0500hex
Current encoder Position = 0000 2267hex

	Byte	1	2	3	4
Cycle	Bit	31-24	23-16	15-8	7-0
1°	M→S	80hex	00hex	05hex	00hex
		1000000_2	0000000_2	0000010_2	0000000_2
	S→M	00hex	00hex	22hex	67hex
		0000000_2	0000000_2	0010001_2	0110011_2
2°	M→S	80	00	05	00
	S→M	00	00	22	67
3°	M→S	80	00	05	00
	S→M	00	00	05	00

WARNING
Always set the Preset value when the encoder shaft is in stop. The new Preset value is saved immediately after receipt.

Please refer also to the example for setting the preset value via Step7; refer to the section “5.3 Setting the Preset value” on page 27.

6.7 DDLM_Slave_Diag

The Master device can send a request for diagnostic information at any time to the Slave device. Datalogic encoders implement the standard diagnostic information (6 bytes). For any information on the DP Slave diagnostics please refer to the “Profibus Specification” document.

6-byte Diagnostic:

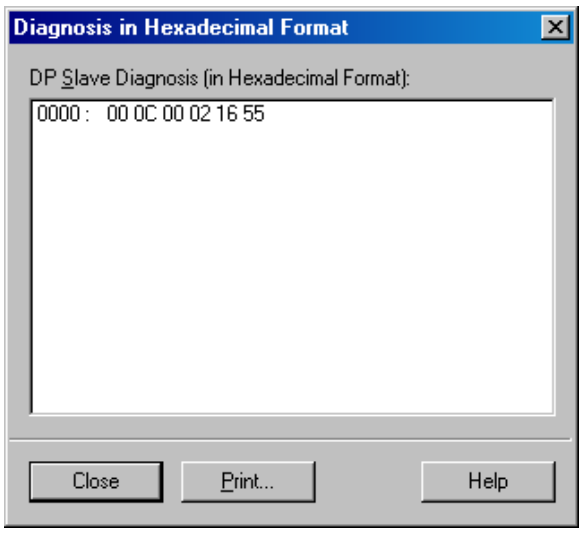

Byte	Description
0	status 1
1	status 2
2	status 3
3	Master ID
4	manufacturer ID
5	

6.8 "Red zone"

The so-called "red zone" occurs when:

$$\text{Number of revolutions} = \frac{\text{Total resolution}}{\text{Counts per revolution}}$$

is NOT a power of 2.

When this problem arises, the device must operate within the “red zone” for a certain number of positions. The size of the “red zone” is variable. To calculate it we must subtract the Total resolution value from the Hardware total resolution of the device as many times as until the difference is less than the the set Total resolution value. When the encoder crosses the limit of the last Total resolution section thus entering the “red zone”, a counting error occurs, i.e. a jump in the position count. The problem can be represented graphically in the Figure below.

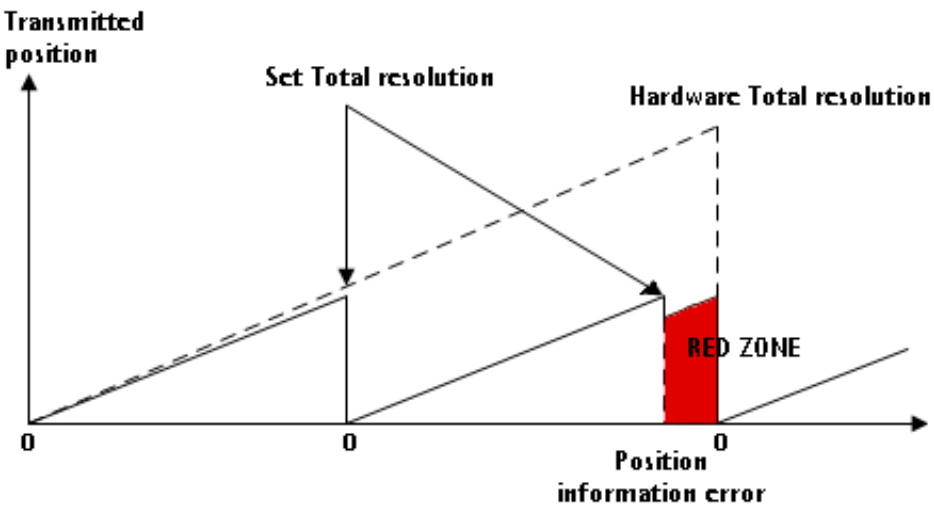

Example
25-bit resolution multiturn encoder

- Hardware counts per revolution = 8192 (2^{13})
- Hardware number of revolutions = 4096 (2^{12})
- Hardware total resolution = 33554432 (2^{25})

Set parameters values:

- Counts per revolution = 5000
- Total resolution = 10000000
- Number of revolutions = 2000

$$\frac{\textbf{Hardware number of revolutions}}{\textbf{Set number of revolutions}} = \frac{4096}{2000} = 2.048$$

It follows that the encoder will work within the limits of the "read zone" for 96 revolutions (4096 - 2 * 2000 = 96), i.e. for 480000 counts (96 * 5000).
The problem can be explained graphically:

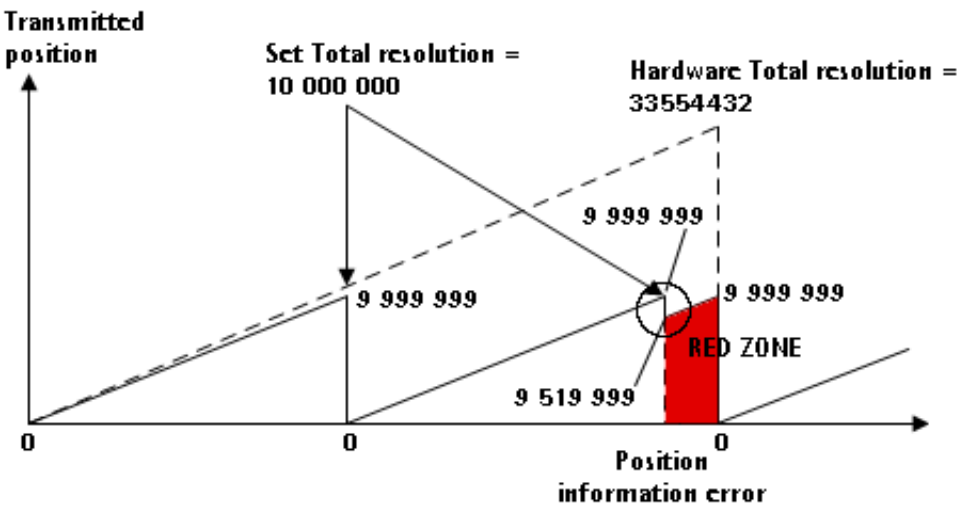

NOTE

- When the encoder is operating within the limits of the “red zone”, the status is indicated by the green LED flashing while the red LED is OFF (see the section “6.8 "Red zone"” on page 13).

- When the encoder is operating within the limits of the “red zone” (i.e. for 5000 cpr * 96 revolutions = 480000 counts: 9519999 … 9999999), the transmitted position is consistent with the set resolution: it is calculated so that the last position within the “red zone” before crossing the zero position is “Total resolution -1”.

- Please be careful using the position information sent by the encoder when it is operating within the limits of the “red zone”. When the encoder crosses from the normal status to the “red zone” status (and vice versa), a position information error occurs. See the Figure above: when entering the “red zone” the position information jumps from 9999999 to 9519999!

7 – Default parameters list

Default values preset in the GSD file for AMT58 multiturn encoder (AMT58-xxx-13x12-PB.GSx)

Lista parametri	Valore di default
Code sequence	0
Class 2 functionality	1
Scaling function	1
Counts per revolution	8196
Total resolution	33554432

DATALOGIC

Absolute Encoders

AMT58

EtherCAT

Instruction Manual

Datalogic S.r.l.
Via S. Vitalino 13
40012 Calderara di Reno
Bologna - Italy

© 2014 - 2017 Datalogic S.p.A. and/or its affiliates ◆ ALL RIGHTS RESERVED. ◆ Without limiting the rights under copyright, no part of this documentation may be reproduced, stored in or introduced into a retrieval system, or transmitted in any form or by any means, or for any purpose, without the express written permission of Datalogic S.p.A. and/or its affiliates.

Datalogic and the Datalogic logo are registered trademarks of Datalogic S.p.A. in many countries, including the U.S.A. and the E.U.

All other trademarks and brands are property of their respective owners. Datalogic reserves the right to make modifications and improvements without prior notification.

16/06/17

INDEX

1 - Safety summary 1
Safety 1
Electrical safety 1
Mechanical safety 2
2 - Identification 3
3 - Mechanical installation 4
3.1 Solid shaft encoders 4
3.1.1 Customary installation 4
3.1.2 Installation using fixing clamps (code LKM-386) 4
3.1.3 Installation using a mounting bell (code ST-58-FLNG) 5
3.2 Hollow shaft encoders 6
3.2.1 AMT58-H15 6
4 - Electrical connections 7
4.1 M12 connectors 7
4.2 Ground connection 8
4.3 Diagnostic LEDs 8
5 - Quick reference (TwinCAT) 9
5.1 System configuration using TwinCAT software system from Beckhoff 9
5.1.1 Setting the Network Card 9
5.1.2 Add new I/O modules (Boxes) 11
5.2.1 Synchronous with SM3 16
5.2.2 Synchronous with DC (SYNC0) 17
5.3 Process Data Objects 18
5.4 COE Object Dictionary 19
5.5 Online Data 20
5.6 EEProm upgrade 21
5.7 Firmware upgrade 26
6 - EtherCAT® interface 30
6.1 Basic Information on EtherCAT® Protocol 30
6.1.1 Data transfer 31
6.1.2 ISO/OSI Layer model 31
6.1.3 Topology 32
6.1.4 Line Termination 33
6.1.5 Addressing 33
6.1.6 Communication mode 34
FreeRun 35
Synchronous with DC SYNC0 37
6.1.7 EtherCAT State Machine (ESM) 38
6.1.8 Slave configuration 39
6.1.9 Timing and Synchronization 40
Sync Manager 40
Buffered Mode (3-Buffer Mode) 40
Mailbox Mode (1-Buffer Mode) 40
6.2 CANopen Over EtherCAT (CoE) 41
6.2.1 XML file 41
6.2.3 Process Data Objects (PDO) 43
6.2.5 Object dictionary 45
Standard objects 45

1000-00 Device type 45
1008-00 Manufacturer Device Name 45
1009-00 Hardware version 45
100A-00 Software version 46
1010-01 Store parameters 46
1011-01 Restore default parameters 46
1018 Identification object 47
01 Vendor number 47
02 Product number 47
03 Revision number 47
04 Serial number 47
1A00-01 PDO mapping parameter 47
1C00 Sync Manager Communication Type 47
01 SM MailBox Receive (SM0) 47
02 SM MailBox Send (SM1) 47
03 SM PDO output (SM2) 47
04 SM PDO input (SM3) 47
1C12-00 Sync Manager RxPDO Assigned 47
1C13-01 Sync Manager TxPDO Assigned 47
1C33 Sync Manager input parameter 47
01 Sync Type 48
02 Cycle time 48
03 Shift Time 48
04 Sync modes supported 48
05 Minimum cycle time 48
06 Calc and Copy time 48
Device profile objects 49
6000-00 Operating parameters 49
Code sequence 49
Scaling function 49
6001-00 Counts per revolution 49
6002-00 Total resolution 50
6003-00 Preset value 51
6004-00 Position value 53
6500-00 Operating status 53
Code sequence 53
Scaling function 53
6501-00 Hardware counts per revolution 54
6502-00 Hardware number of turns 54
6503-00 Errors 54
6504-00 Supported errors 54
6505-00 Warnings 54
6506-00 Supported warnings 54
6509-00 Offset value 54
6.2.6 SDO Abort codes 55
6.2.7 Emergency Error Codes 55
6.2.8 AL Status Error Codes 55
7 – Default parameters list 56

Subject Index

1
1000-00 Device type 45
1008-00 Manufacturer Device Name 45
1009-00 Hardware version 45
100A-00 Software version 46
1010-01 Store parameters 46
1011-01 Restore default parameters 46
1018 Identification object 47
1A00-01 PDO mapping parameter 47
1C00 Sync Manager Communication Type 47
1C12-00 Sync Manager RxPDO Assigned 47
1C13-01 Sync Manager TxPDO Assigned 47
1C33 Sync Manager input parameter 47
6
6000-00 Operating parameters 49
6001-00 Counts per revolution 49
6002-00 Total resolution 50
6003-00 Preset value 51
6004-00 Position value 53
6500-00 Operating status 53
6501-00 Hardware counts per revolution 54
6502-00 Hardware number of turns 54
6503-00 Errors 54
6504-00 Supported errors 54
6505-00 Warnings 54
6506-00 Supported warnings 54
6509-00 Offset value 54
C
Calc and Copy time 48
Code sequence 49; 53
Cycle time 48
D
Diagnostic data 55
H
Hardware error 55
I
INIT 38
M
Minimum cycle time 48
O
OPERATIONAL 38
P
PRE-OPERATIONAL 38
Product number 47
R
Revision number 47
S
SAFE-OPERATIONAL 38
Scaling function 49; 53
Serial number 47
Shift Time 48
SM MailBox Receive (SM0) 47
SM MailBox Send (SM1) 47
SM PDO input (SM3) 47
SM PDO output (SM2) 47
Sync modes supported 48
Sync Type 48
V
Vendor number 47

Typographic and iconographic conventions

In this guide, to make it easier to understand and read the text the following typographic and iconographic conventions are used:

- parameters and objects both of the device and the interface are coloured in ORANGE;
- alarms are coloured in RED;
- states are coloured in FUCSIA.

When scrolling through the text some icons can be found on the side of the page: they are expressly designed to highlight the parts of the text which are of great interest and significance for the user. Sometimes they are used to warn against dangers or potential sources of danger arising from the use of the device. You are advised to follow strictly the instructions given in this guide in order to guarantee the safety of the user and ensure the performance of the device. In this guide the following symbols are used:

	This icon, followed by the word WARNING, is meant to highlight the parts of the text where information of great significance for the user can be found: user must pay the greatest attention to them! Instructions must be followed strictly in order to guarantee the safety of the user and a correct use of the device. Failure to heed a warning or comply with instructions could lead to personal injury and/or damage to the unit or other equipment.
	This icon, followed by the word NOTE, is meant to highlight the parts of the text where important notes needful for a correct and reliable use of the device can be found. User must pay attention to them! Failure to comply with instructions could cause the equipment to be set wrongly: hence a faulty and improper working of the device could be the consequence.
	This icon is meant to highlight the parts of the text where suggestions useful for making it easier to set the device and optimize performance and reliability can be found. Sometimes this symbol is followed by the word EXAMPLE when instructions for setting parameters are accompanied by examples to clarify the explanation.

Preliminary information

This guide is designed to describe the technical characteristics, installation and use of the EtherCAT encoders of the AMT58 series.
For any further information please refer to the product datasheet.

To make it easier to read the text, this guide is divided into two main sections.
In the first section general information concerning the safety, the mechanical installation and the electrical connection as well as tips for setting up and running properly and efficiently the unit are provided.
In the second section, entitled EtherCAT Interface, both general and specific information is given on the EtherCAT interface. In this section the interface features and the objects implemented in the unit are fully described.

1 - Safety summary

Safety

- Always adhere to the professional safety and accident prevention regulations applicable to your country during device installation and operation;
- installation and maintenance operations have to be carried out by qualified personnel only, with power supply disconnected and stationary mechanical parts;
- device must be used only for the purpose appropriate to its design: use for purposes other than those for which it has been designed could result in serious personal and/or the environment damage;
- high current, voltage and moving mechanical parts can cause serious or fatal injury;
- warning ! Do not use in explosive or flammable areas;
- failure to comply with these precautions or with specific warnings elsewhere in this manual violates safety standards of design, manufacture, and intended use of the equipment;
- Datalogic Automation s.r.l. assumes no liability for the customer's failure to comply with these requirements.

Electrical safety

- Turn off power supply before connecting the device;
- connect according to explanation in the section 4 “Electrical connections “ in compliance with the 2014/30/EU norm on electromagnetic compatibility, following precautions must be taken:

  - before handling and installing, discharge electrical charge from your body and tools which may come in touch with the device;
  - power supply must be stabilized without noise, install EMC filters on device power supply if needed;
  - always use shielded cables (twisted pair cables whenever possible);
  - avoid cables runs longer than necessary;
  - avoid running the signal cable near high voltage power cables;
  - mount the device as far as possible from any capacitive or inductive noise source, shield the device from noise source if needed;
  - to guarantee a correct working of the device, avoid using strong magnets on or near by the unit;
  - minimize noise by connecting the shield and/or the connector housing and/or the frame to ground. Make sure that ground is not affected by noise. The connection point to ground can be situated both on the device side and on user’s side. The best solution to minimize the interference must be carried out by the user.

Mechanical safety

- Install the device following strictly the information in the section 3 “Mechanical installation “
- mechanical installation has to be carried out with stationary mechanical parts;
- do not disassemble the encoder;
- do not tool the encoder or its shaft;
- delicate electronic equipment: handle with care; do not subject the device and the shaft to knocks or shocks;
- respect the environmental characteristics declared by manufacturer;
- unit with solid shaft: in order to guarantee maximum reliability over time of mechanical parts, we recommend a flexible coupling to be installed to connect the encoder and user's shaft; make sure the misalignment tolerances of the flexible coupling are respected;
- unit with hollow shaft: the encoder can be mounted directly on a shaft whose diameter has to respect the technical characteristics specified in the purchase order and clamped by means of the collar and, when requested, the anti-rotation pin.

2 - Identification

Device can be identified through the ordering code and the serial number printed on the label applied to its body. Information is listed in the delivery document too. Please always quote the ordering code and the serial number when reaching Datalogic Automation s.r.l. for purchasing spare parts or needing assistance. For any information on the technical characteristics of the product refer to the technical catalogue.

3 - Mechanical installation

WARNING
Installation and maintenance operations have to be carried out by qualified personnel only, with power supply disconnected. Shaft and mechanical components must be in stop.

3.1 Solid shaft encoders

- Mount the flexible coupling 1 on the encoder shaft;
- fix the encoder to the flange 2 (or to the mounting bell) by means of the screws 3;
- secure the flange 2 to the support (or the mounting bell to the motor);
- mount the flexible coupling 1 on the motor shaft;
- make sure the alignment tolerances of the flexible coupling 1 are respected.

3.1.1 Customary installation

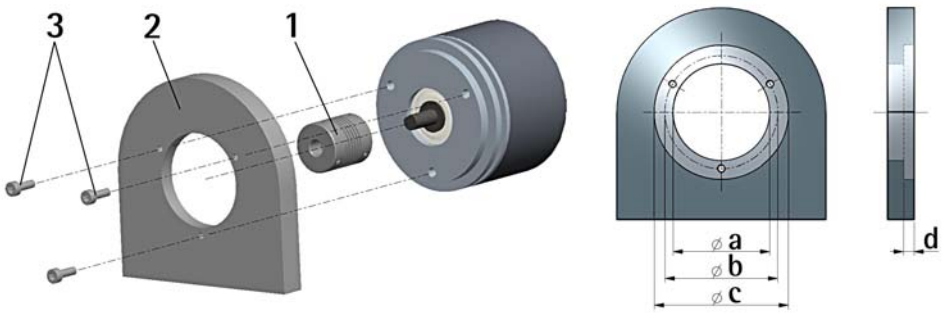

	a [mm]	b [mm]	c [mm]	d [mm]
AMT58	36 H7	48	-	-

3.1.2 Installation using fixing clamps (code LKM-386)

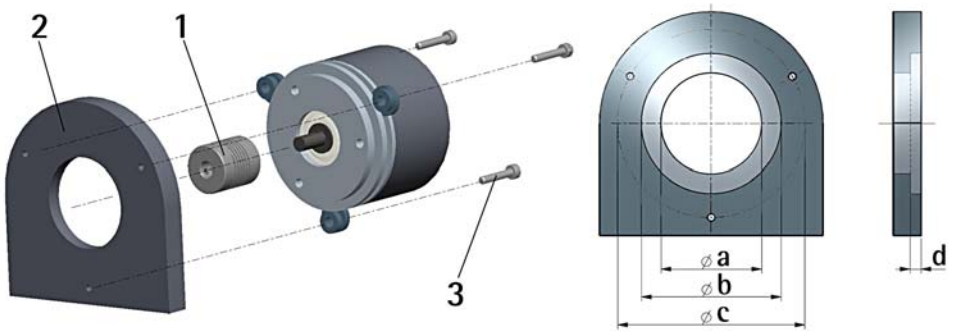

	a [mm]	b [mm]	c [mm]	d [mm]
AMT58	36 H7	-	67	-

3.1.3 Installation using a flange (code ST-58-FLNG)

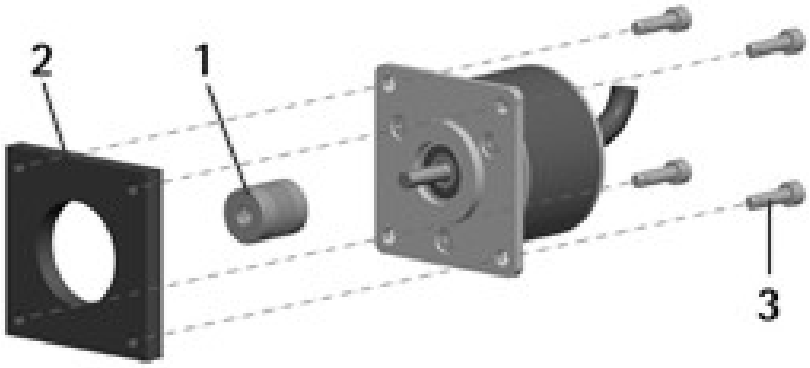

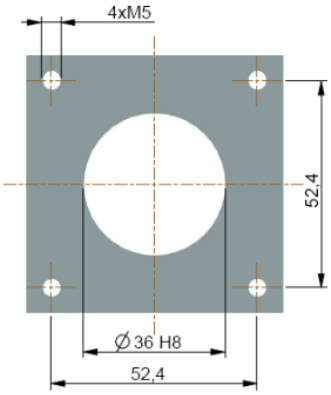

3.2 Hollow shaft encoders

3.2.1 AMT58-H15

- Mount the encoder on the motor shaft using the reducing sleeve 8 (if supplied). Avoid forcing the encoder shaft;
- fasten the fixing plate 4 to the rear of the motor using two M3 cylindrical head screws 5;
- fix the collar 3 to the encoder shaft (apply threadlocker to screw 3).

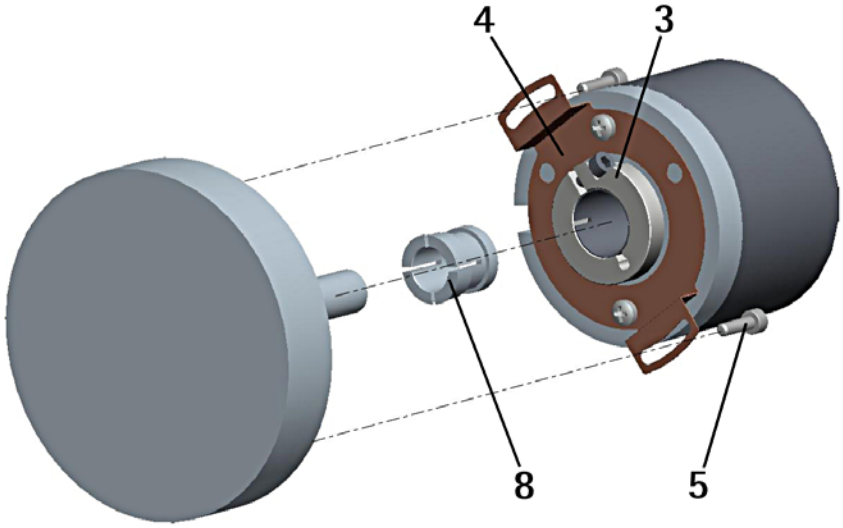

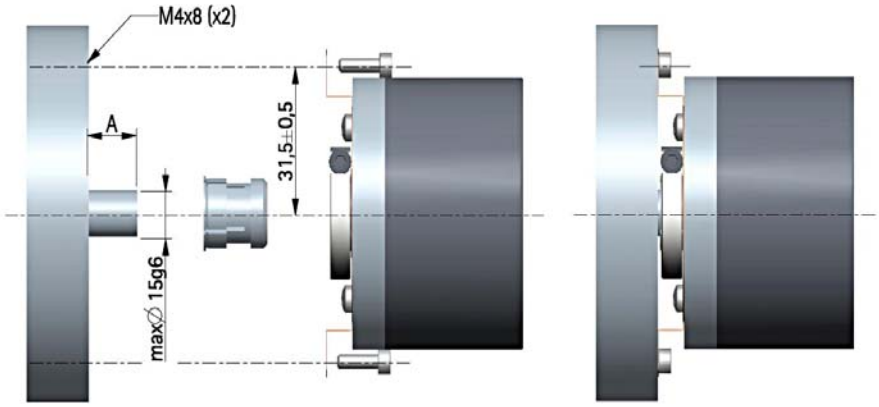

4 - Electrical connections

WARNING
Power supply must be turned off before performing any electrical connection!
Do not remove the connection cap of the encoder. Damage may be caused to internal components.

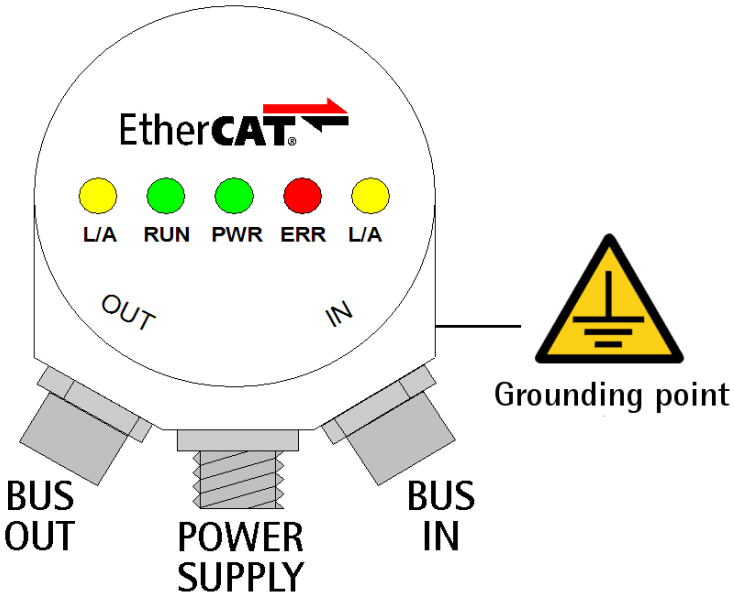

4.1 M12 connectors

The connection cap is fitted with three M12 connectors with pin-out in compliance with the EtherCAT® standard. Therefore you can use standard EtherCAT cables commercially available.
Input (IN) and output (OUT) connectors are not interchangeable! IN connector must be placed in the direction of the ETherCAT Master.

M12	BUS IN & BUS OUT	POWER
(frontal side)	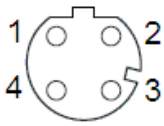 D coding female	A coding male

Pin	Description	Description
1	Tx Data +	+10VDC +30VDC
2	Rx Data +	n.c.
3	Tx Data -	0 VDC
4	Rx Data -	n.c.

n.c.= not connected.

4.2 Ground connection

Minimize noise by connecting the shield and/or the connector housing and/or the frame to ground. Make sure that ground is not affected by noise. The connection point to ground can be situated both on the device side and on user's side. The best solution to minimize the interference must be carried out by the user. You are advised to provide the ground connection as close as possible to the encoder. We suggest using the ground point provided in the cap (see Figure, use 1 TCEI M3 x 6 cylindrical head screw with 2 tooth lock washers).

4.3 Diagnostic LEDs

Five LEDs located in the rear side of the connection cap are designed to show the operating or fault status of the EtherCAT® interface.

Link/ Activity (yellow)	it shows the status of the physical link and the activity in this link
OFF	condition: port closed, link: YES, activity: N.A.
FLICKERING	condition: port open, link: YES, activity: YES
ON	condition: port open, link: YES, activity: NO

RUN (green)	it shows the status of the EtherCAT State Machine (ESM)
OFF	encoder is in INIT status
BLINKING	encoder is in PRE-OPERATIONAL status
SINGLE FLASH	encoder is in SAFE-OPERATIONAL status
ON	encoder is in OPERATIONAL status

PWR (green)	it shows the power supply status
OFF	encoder is switched OFF
ON	encoder is switched ON

ERR (red)	it shows the error status
OFF	no error
FLICKERING	error on loading parameters from flash memory at start-up
FLICKERING	encoder parameters have not been saved correctly on flash memory
BLINKING	invalid configuration
SINGLE FLASH	local error (see ETG1000.6)
DOUBLE FLASH	watchdog timeout
ON	memory error and ESC controller not active

5 - Quick reference (TwinCAT)

5.1 System configuration using TwinCAT software system from Beckhoff

5.1.1 Setting the Network Card

Launch TwinCAT System Manager.
In the left pane of the main window extend the devices tree and select the I/O Devices item; right-click the I/O Devices item and then press the Append Device... command.

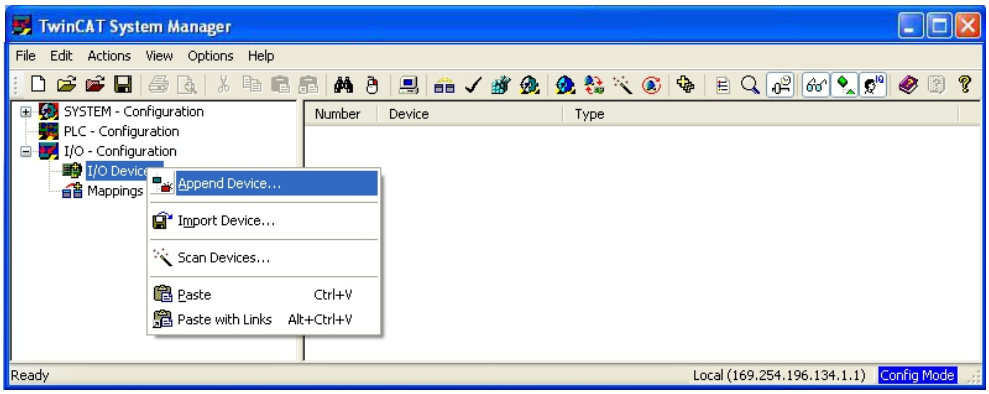

In the Insert Device window select the EtherCAT (Direct Mode) item and confirm pressing the OK button.

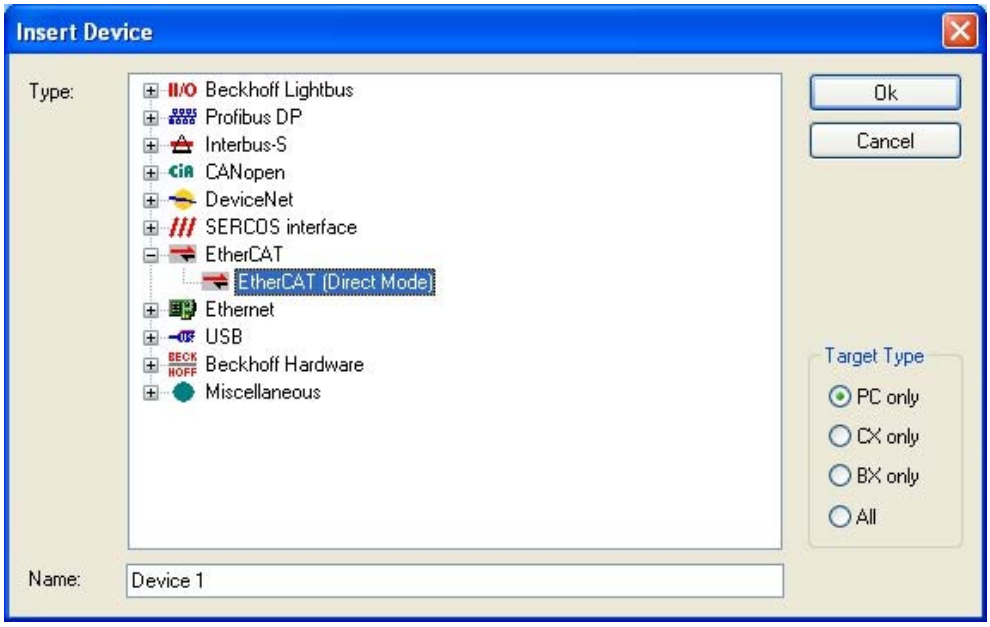

If a network card has been already installed properly, the following window will appear showing the list of the installed devices.

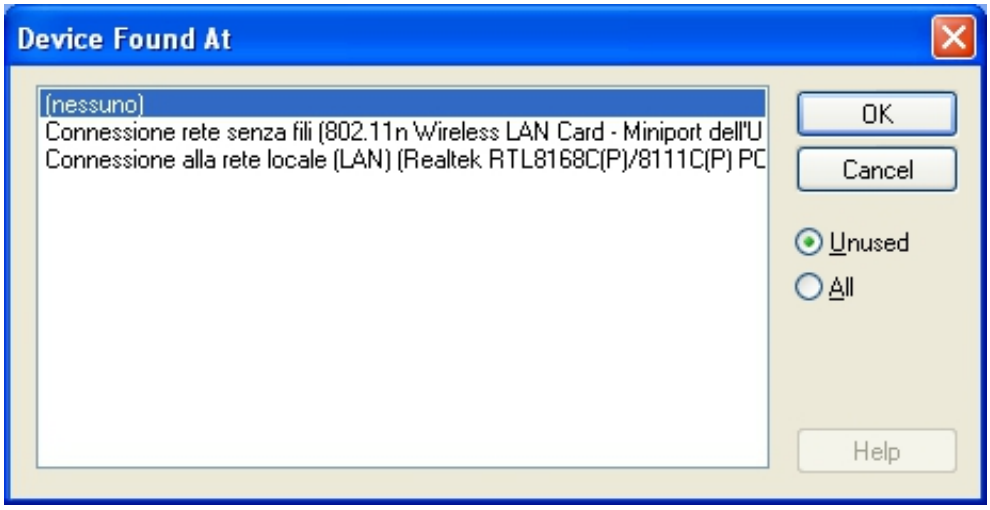

Select the network card you want to use and then confirm the choice pressing the OK button.

If there are no network cards installed, you must install one before proceeding.
To do this, on the menu bar of the TwinCAT System Manager main window, select the Options menu and then press the Show Real Time Ethernet Compatible Devices... command.

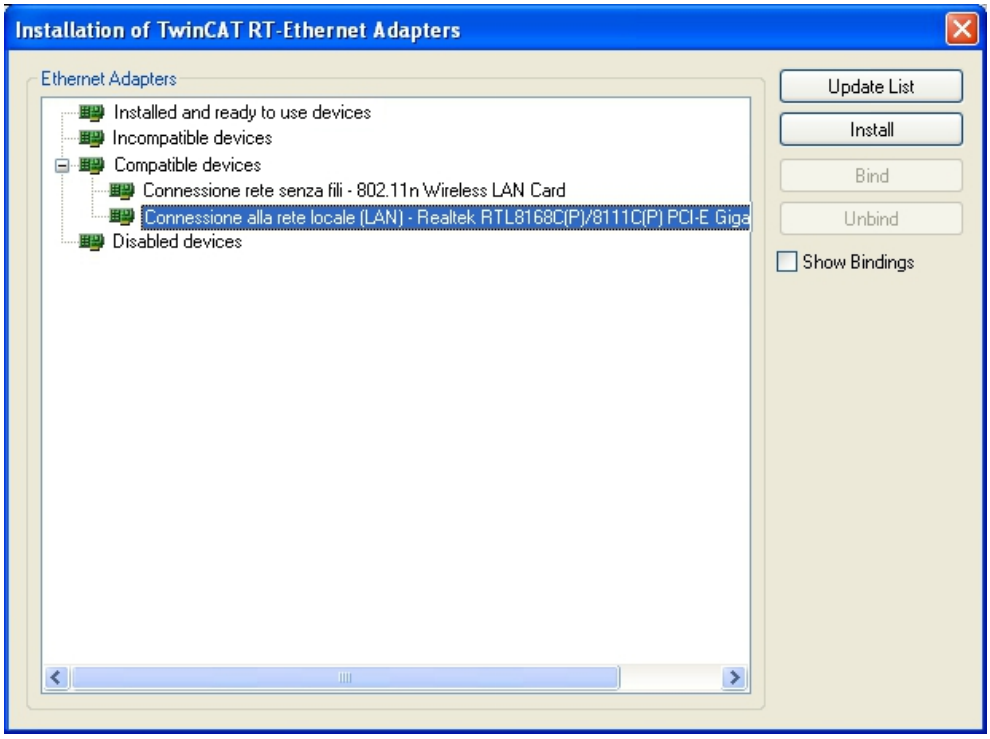

The Installation of TwinCAT RT – Ethernet Adapter window will appear. Now select Compatible Devices item and choose the network card you want to install; finally press the Install button to confirm your choice.

5.1.2 Add new I/O modules (Boxes)

If devices are connected to the network and switched ON, right-click the Device 1 (EtherCAT) item in the left pane of the TwinCAT System Manager main window and press the Scan Boxes... command.

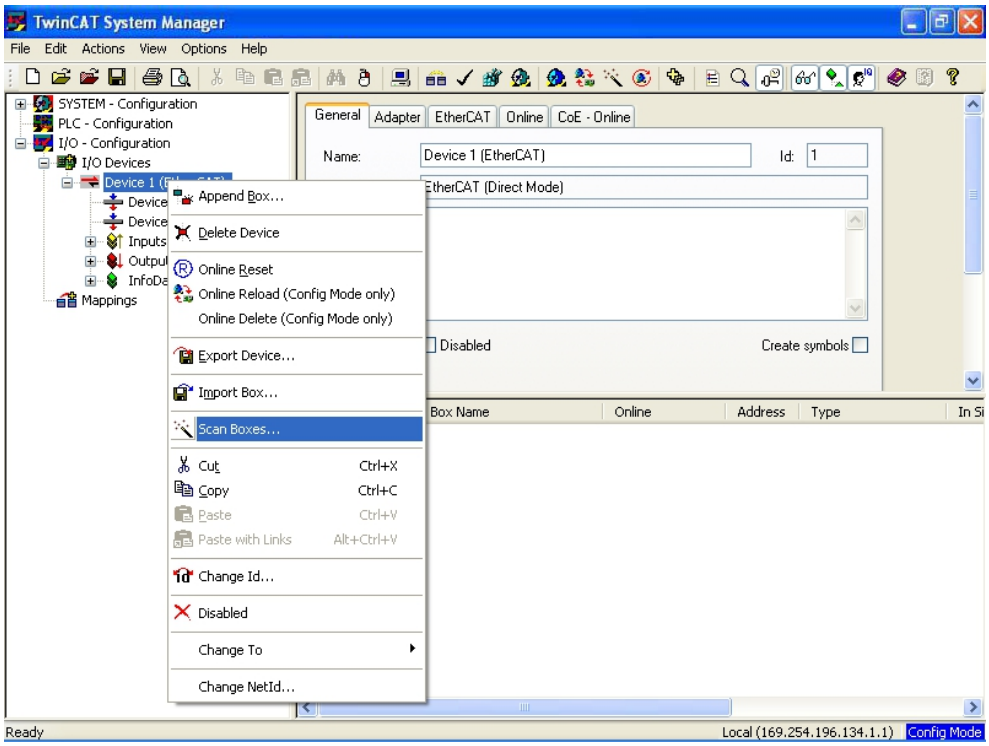

At the end of the process some information will be listed in the right page as in Figure here below.

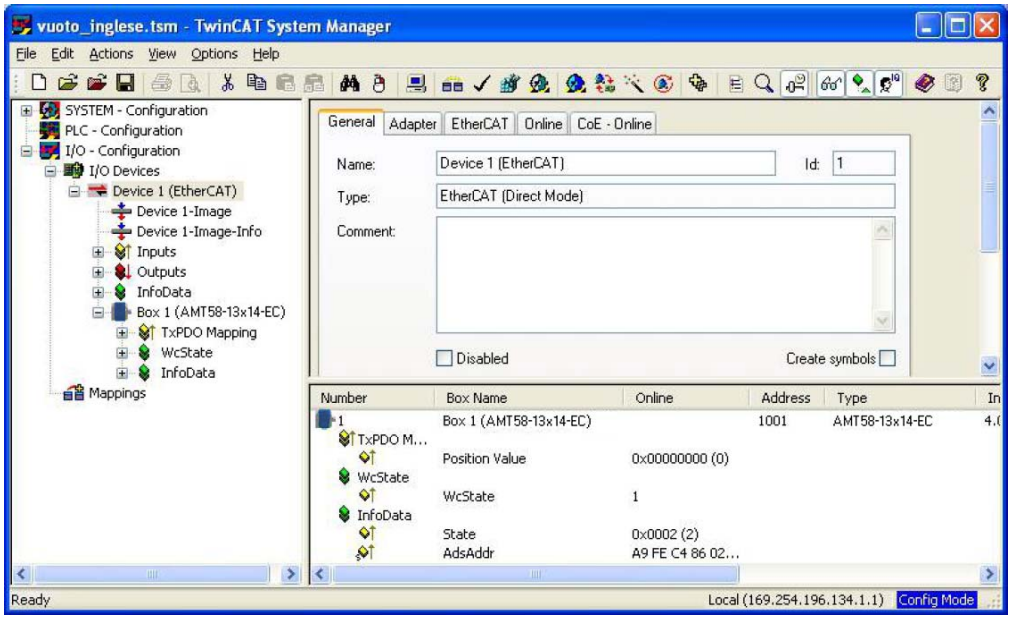

If devices are not already connected to the network it is necessary to use the XML file supplied with the encoder: **AMT58-xxx-13x14-EC** (see at www.datalogic.com). At the same address you can also download the most recent files to update both the firmware and the EEProm of the encoder. For older versions of the files please contact Datalogic Automation s.r.l. After Sales Service Dept. For any information on the firmware upgrade procedure refer to the section "5.7 Upgrade firmware" on page 26. For any information on the EEProm upgrade procedure refer to the section "5.6 EEProm upgrade" on page 21).

WARNING
Before installing the XML file please check that it is compatible with the firmware version and the EEProm version of the device; the XML file version, the firmware version and the EEProm version must always comply. For example: if the firmware version is H1_S4 (Hardware version: 1; Software version: 4), it is mandatory that the EEProm version is S4, therefore you must then install the XML file version V4. For a description EEProm upgrade procedure please refer to the section "5.6 EEProm upgrade" on page 21. For a description of the firmware upgrade procedure please refer to the section "5.7 Firmware upgrade" on page 26.

WARNING
It is mandatory that in an EtherCAT network all devices are provided with the same version of the firmware, EEProm and XML file. So when you need to replace an old encoder installed in your network, then you must either upgrade all the encoders in the network to the last version compatible with the new encoder; or you must downgrade the new encoder to the older version compatible with the encoders already installed in the network.

If you want to know the firmware version of a device, press the Box (AMT58-ECAT) item in the left pane of the TwinCAT System Manager main window: some tabbed pages for configuring and managing the device will appear in the right pane. Enter the CoE - Online page and refer to the indexes Hardware version and Software version.

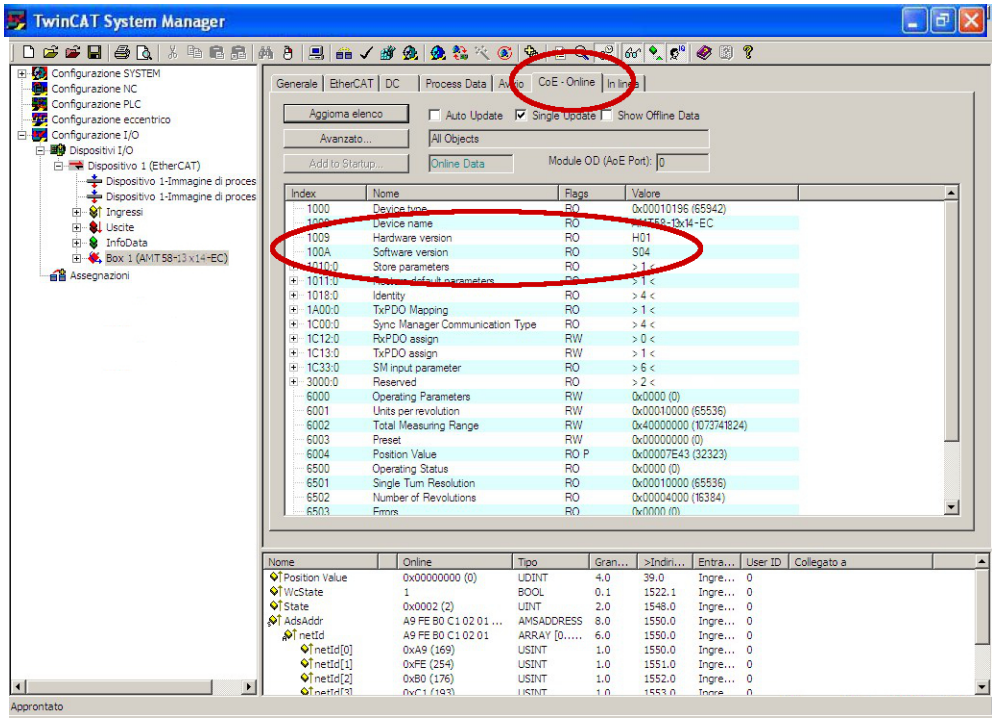

Right-click the Device 1 (EtherCAT) item in the left pane of the TwinCAT System Manager main window and press the Append Box... command.

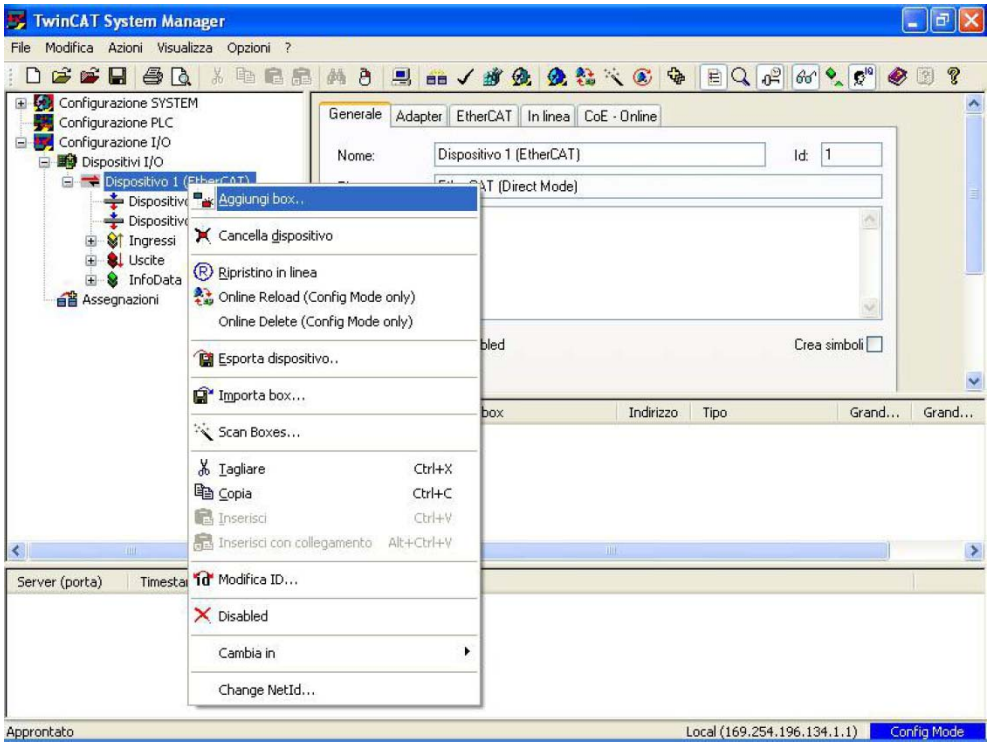

In the Insert EtherCAT Device window that appears select Datalogic S.p.a and then EtherCAT Encoder items; now choose from the list the encoder you want to install:

- AMT58-ECAT

Press the OK button to confirm your choice.

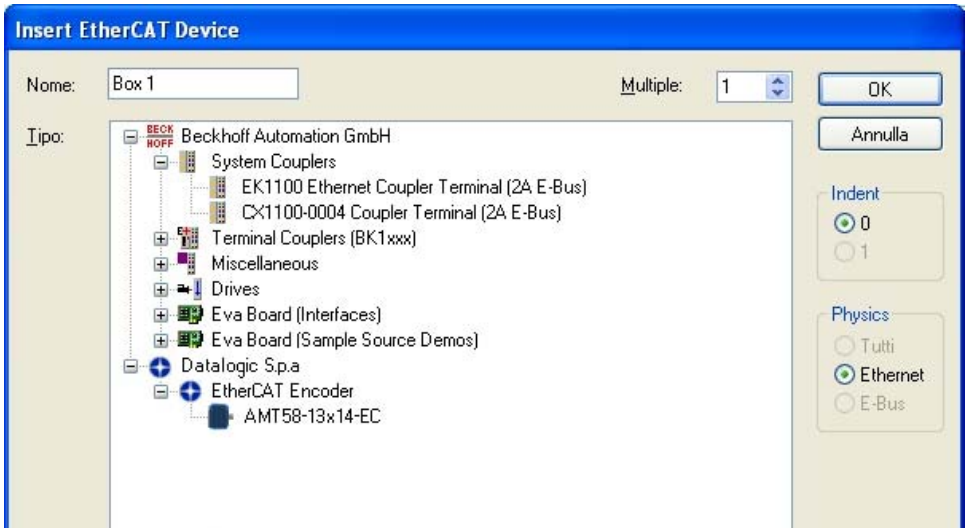

5.2 Setting the communication mode

5.2.1 Synchronous with SM3

In the left pane of the TwinCAT System Manager main window press the Box (AMT58-ECAT) item: some tabbed pages for configuring and managing the device will appear in the right pane. Enter DC page. Select the Synchronous with SM3 (Inputs) option in the Operation Mode box.

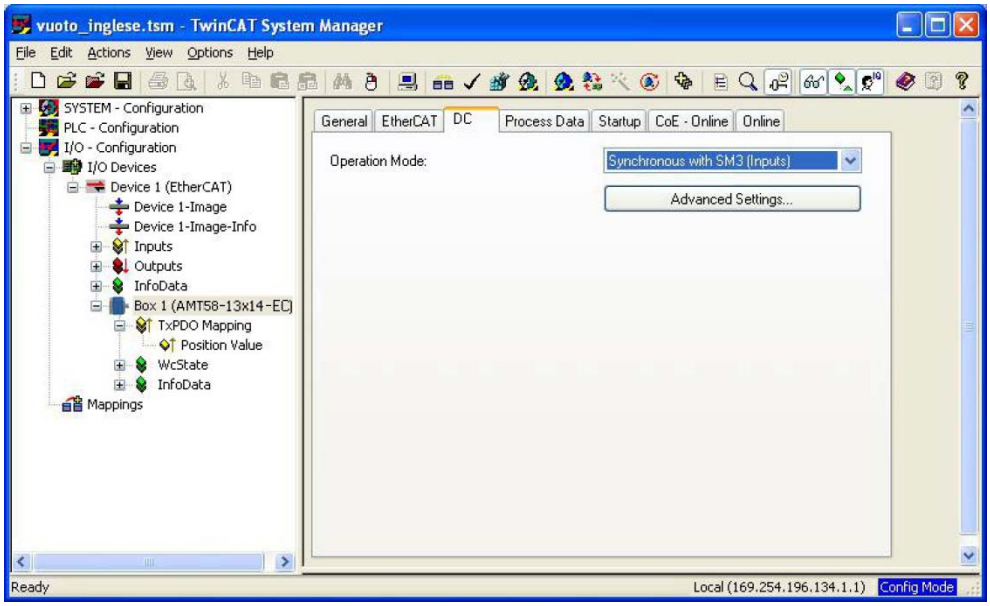

For any further information on the Synchronous with SM3 operation mode please refer to the section “Synchronous with SM3” on page 36 and to the object **1C33 Sync Manager input parameter** on page 48.

5.2.2 Synchronous with DC (SYNC0)

In the left pane of the TwinCAT System Manager main window press the Box (AMT58-ECAT) item: some tabbed pages for configuring and managing the device will appear in the right pane. Enter DC page.
Select the Synchronous with DC (SYNC0) option in the Operation Mode box.
Then press the Advanced Settings... button.

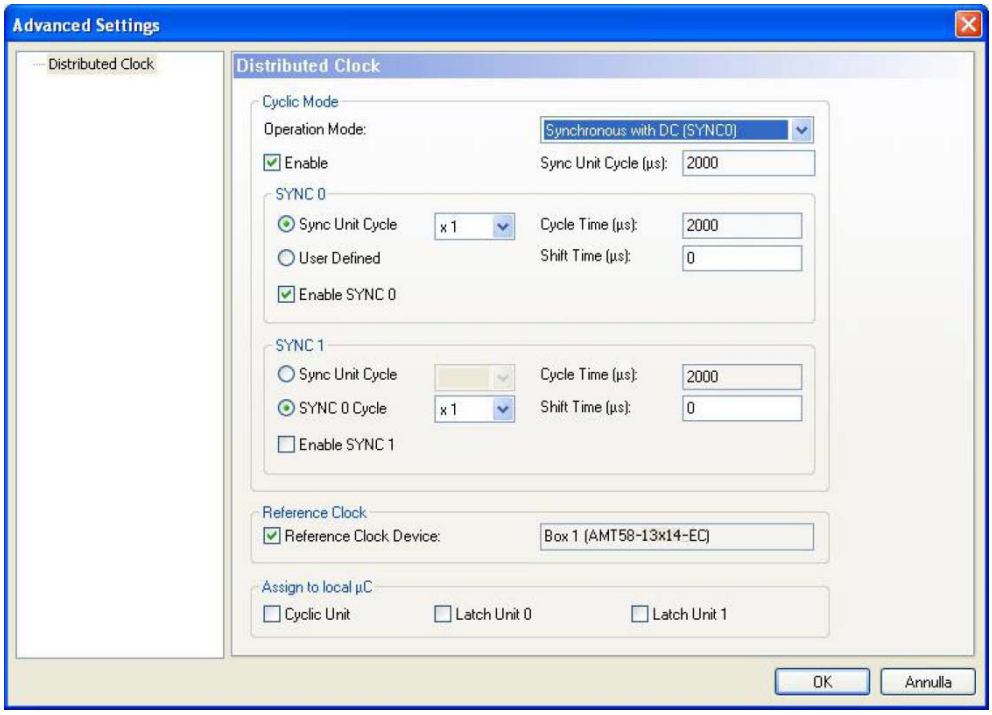

The Advanced Settings window will appear. In the section tabbed SYNC 0 set the cycle time next to the Sync Unit Cycle box; sync time is calculated as multiple (or sub-multiple) of the value set in the Sync Unit Cycle (µs) item right above.

For any further information on the Synchronous with DC operation mode please refer to the section “Synchronous with DC SYNC0” on page 37 and to the object **1C33 Sync Manager input parameter** on page 48.

5.3 Process Data Objects

In the left pane of the TwinCAT System Manager main window press the Box (AMT58-ECAT) item: some tabbed pages for configuring and managing the device will appear in the right pane. Enter the Process Data page. In this page process data objects (PDO Mapping) are shown.

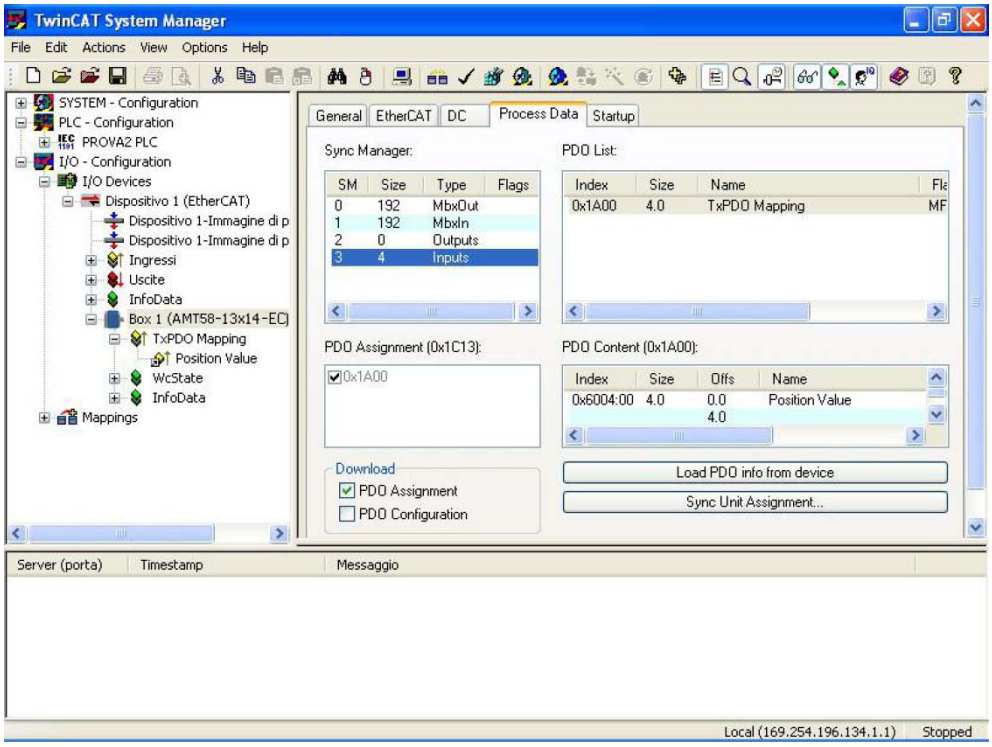

Process data objects can be displayed also by pressing the TxPDO Mapping item in the left pane of the TwinCAT System Manager main window; data is listed in the right panel.

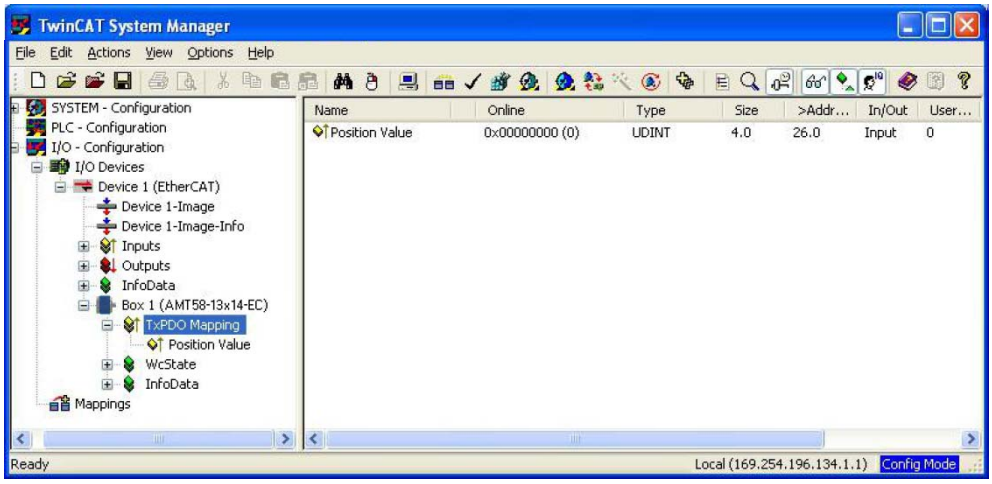

5.4 COE Object Dictionary

In the left pane of the TwinCAT System Manager main window press the Box (AMT58-ECAT) item: some tabbed pages for configuring and managing the device will appear in the right pane. Enter the CoE - Online page. In this page the objects dictionary is shown.

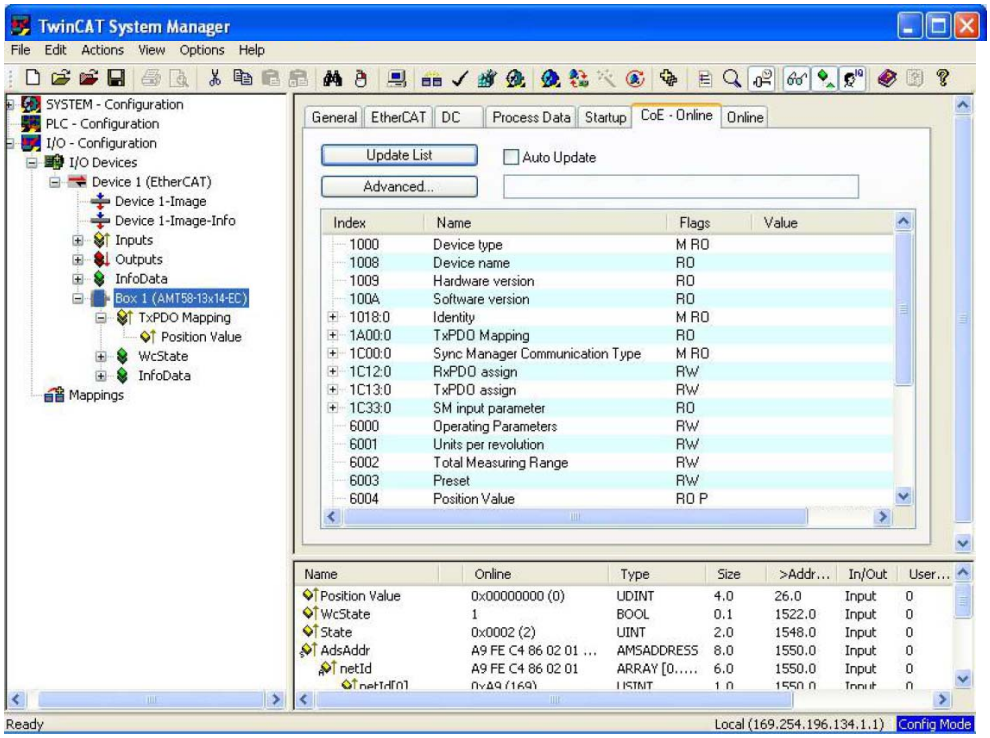

Objects can be read directly from the encoder; to do this click the Advanced... button: the Advanced Settings window will appear.

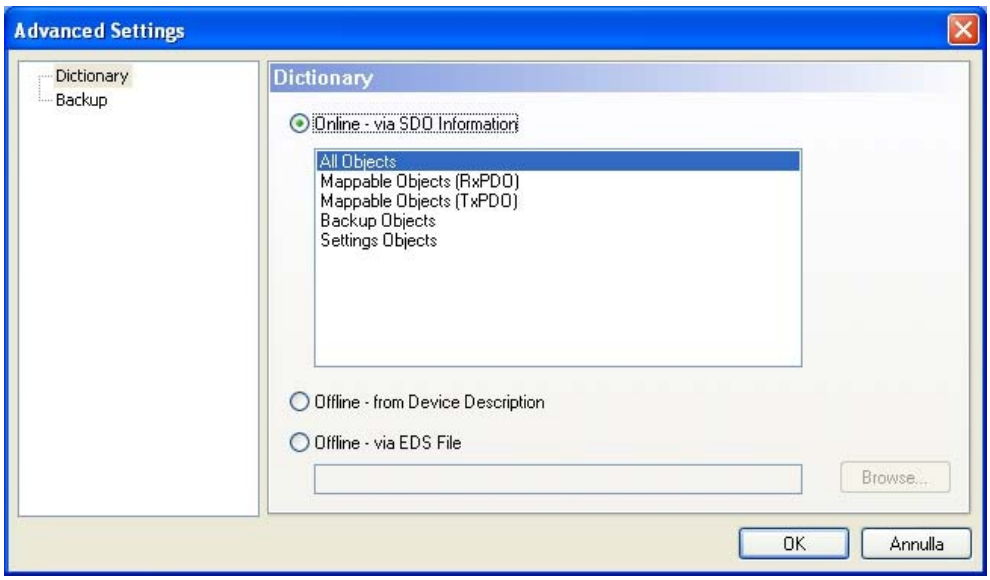

Select the Dictionary item in the left pane and then choose the Online - via SDO Information option in the Dictionary page; press OK button to confirm.

5.5 Online Data

In the left pane of the TwinCAT System Manager main window press the Box (AMT58-ECAT) item: some tabbed pages for configuring and managing the device will appear in the right pane. Enter the Online page to check the encoder status.

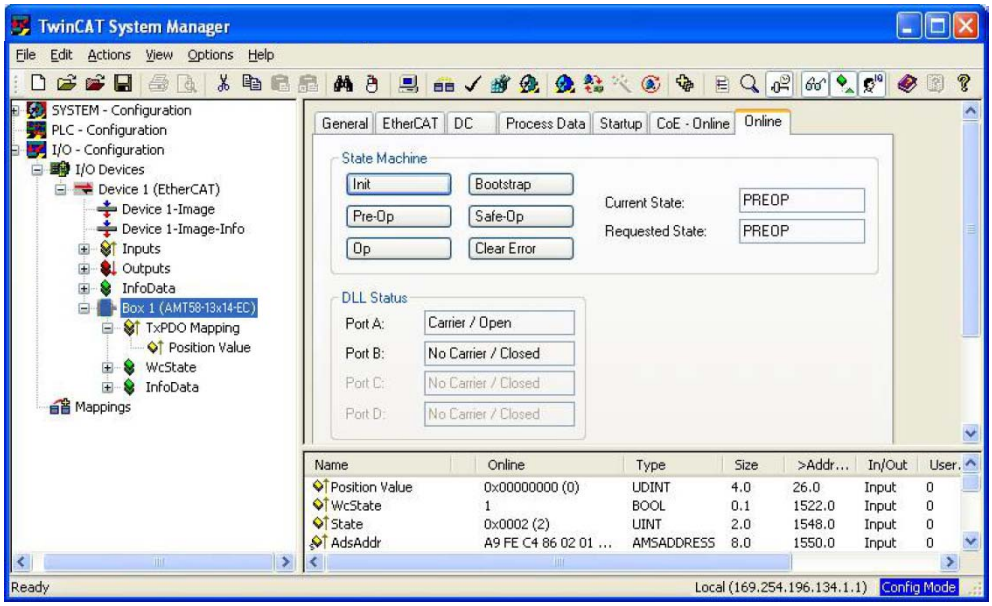

To display the encoder process data in real time, click the Safe-OP button if you want to display inputs only; click the OP button if you want to display both inputs and outputs.

WARNING

The structure of Data Objects (PDO and SDO) requires bytes to be sent from the Least Significant Byte (LSB) to the Most Significant Byte (MSB).

On the contrary in TwinCAT write and read data from MSB to LSB.

Furthermore in TwinCAT also strings must be entered in the reverse order:

- read default values: Data byte = 64 61 6F 6Chex = “daol” in ASCII code (means “load” in reverse);
- save parameters: Data byte = 65 76 61 73hex = “evas” in ASCII code (means “save” in reverse).

5.6 EEProm upgrade

WARNING
The EEProm upgrade process has to be accomplished by skilled and competent personnel. If the upgrade is not performed according to the instructions provided or a wrong or incompatible EEProm program is installed then the unit may not be updated correctly, in some cases preventing the unit from working.

WARNING
The XML file version, the firmware version and the EEProm version must always comply. For example: if the firmware version is H1_S4 (Hardware version: 1; Software version: 4), it is mandatory that the EEProm version is S4, therefore you must then install the XML file version V4.

WARNING
It is mandatory that in an EtherCAT network all devices are provided with the same version of the firmware, EEProm and XML file. So when you need to replace an old encoder installed in your network, then you must either upgrade all the encoders in the network to the last version compatible with the new encoder; or you must downgrade the new encoder to the older version compatible with the encoders already installed in the network.

1. In the left pane of the TwinCAT System Manager main window press the Box (AMT58-ECAT) item of the encoder you need to update: some tabbed pages for configuring and managing the device will appear in the right pane. Enter the EtherCAT page.

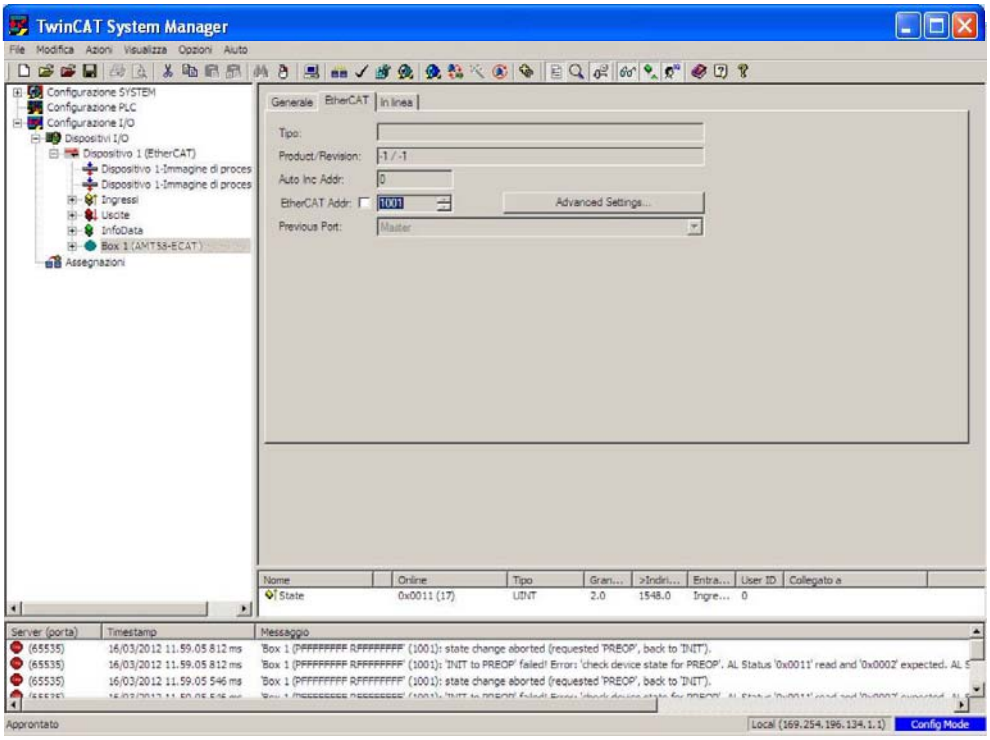

2. Press the Advanced Settings... button; the Advanced Settings page will appear; in the directory tree on the left expand the ESC Access directory, then expand the E2PROM directory, finally select the HEX Editor item.

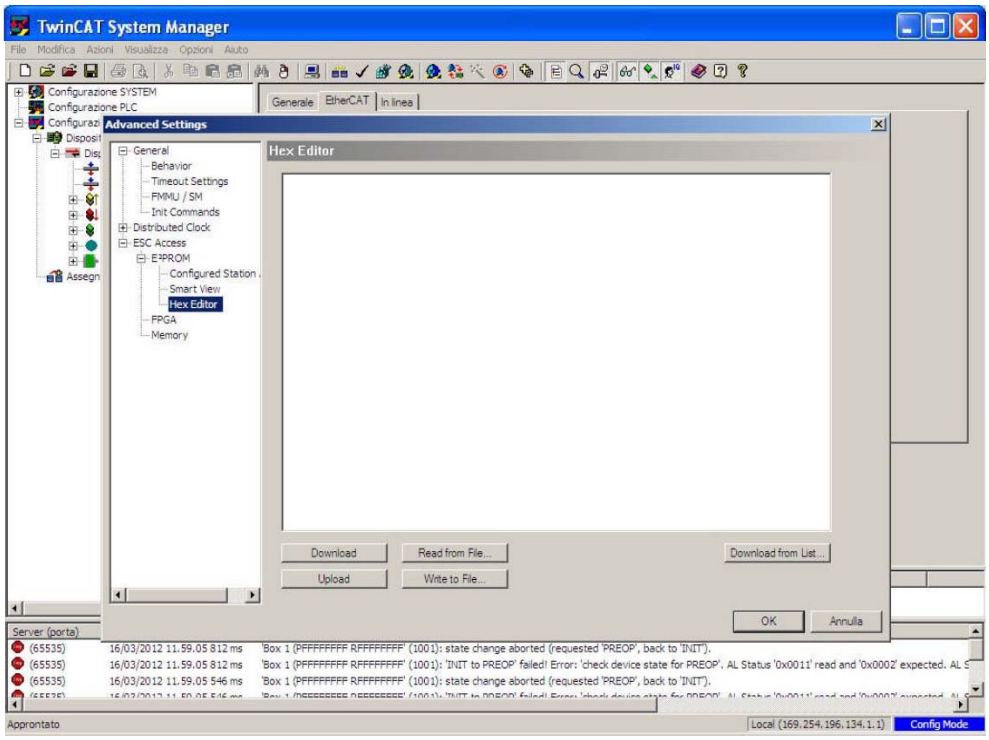

3. Press the Read from File... button and select the .BIN file provided to upgrade the EEProm; please make sure you select the file of your own model you need to upgrade (for example: if you have to upgrade an <u>H- series multiturn encoder</u> then you must select the file **AMT58_EC_eeprom_Hx_Sy.bin);** finally press the Open button.

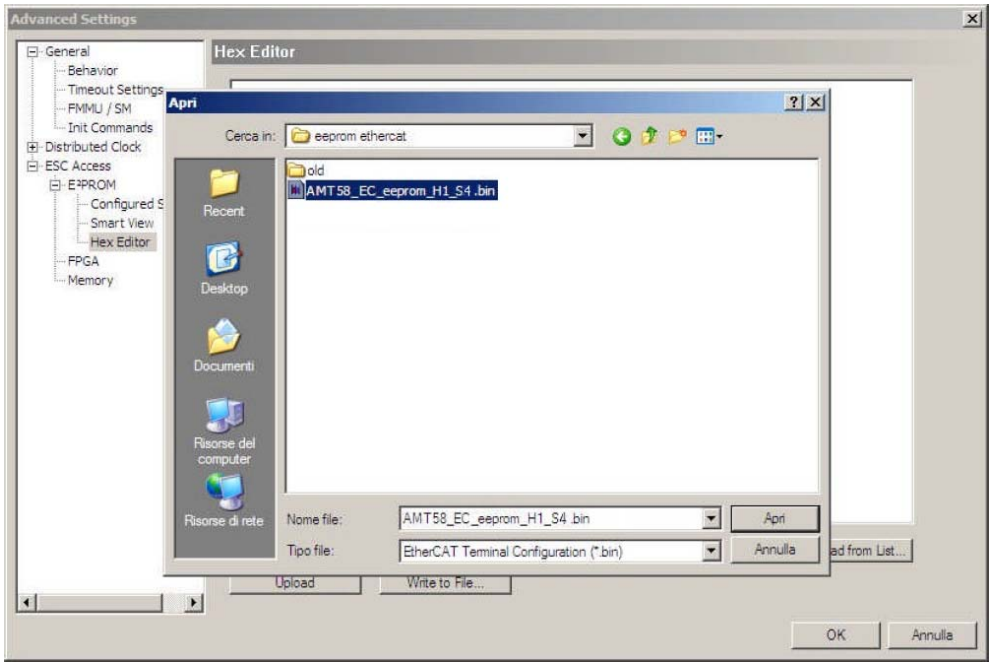

NOTE
In the .BIN file Hx is the hardware version of the encoder, while Sy is the software version.

4. Move back to the previous Advanced Settings page and press the Download button. Now wait until the EEProm writing process is carried out. The progress bar below in the page displays the progress of the operation. As soon as the process is completed press the OK button.

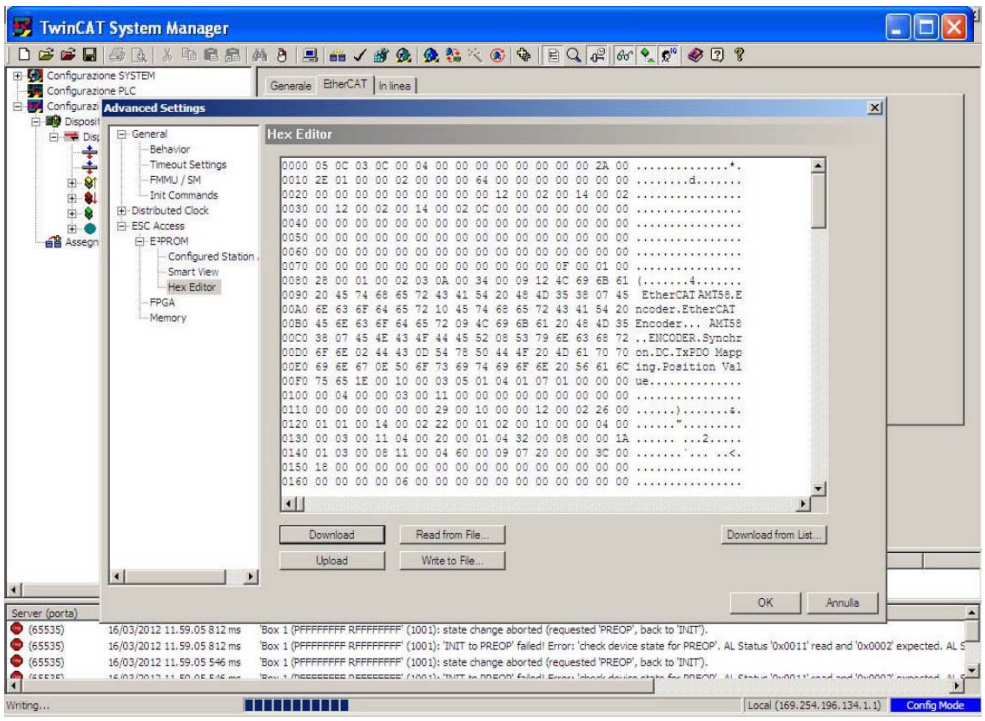

5. Now turn power off, then on again.

6. In the left pane of the TwinCAT System Manager main window delete all the Box (AMT58-ECAT) items in the list. Select each box and then press the DEL key in the PC keyboard. Press OK to confirm.

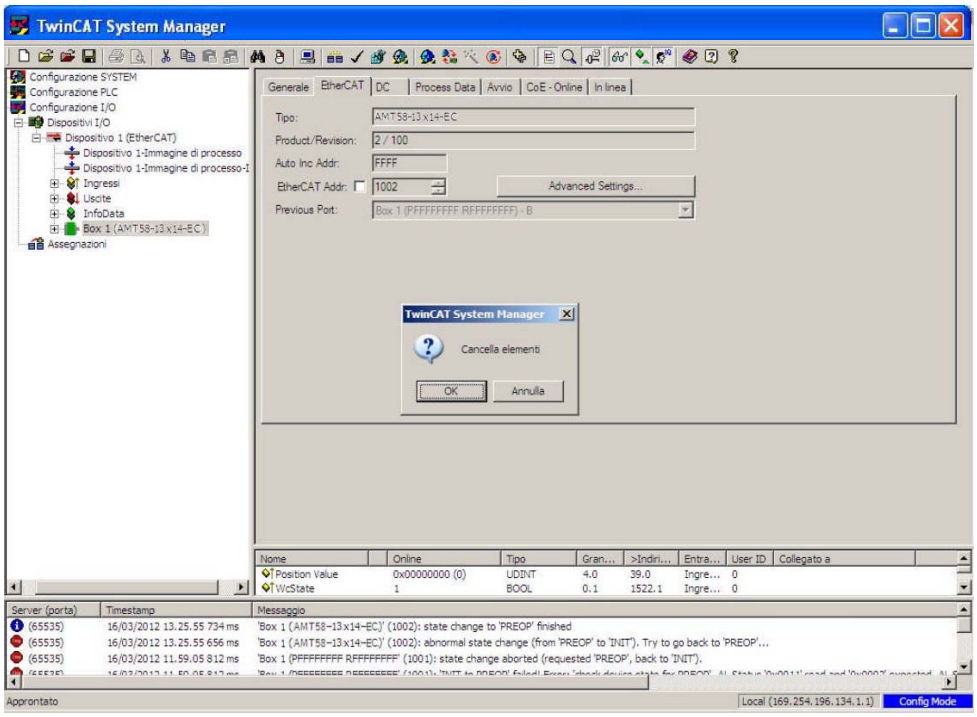

7. In the left pane of the TwinCAT System Manager main window select and right-click the Device 1 (EtherCAT) item; press the Scan Boxes… command in the menu.

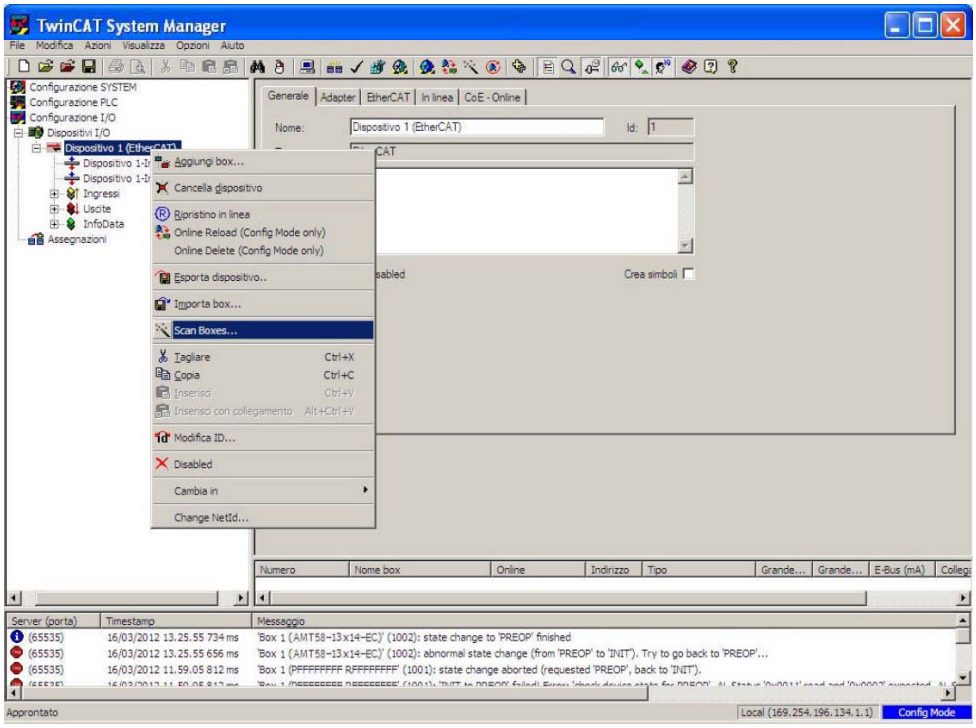

8. At the end of the scanning process all the devices available in the network are listed as shown in the Figure here below.

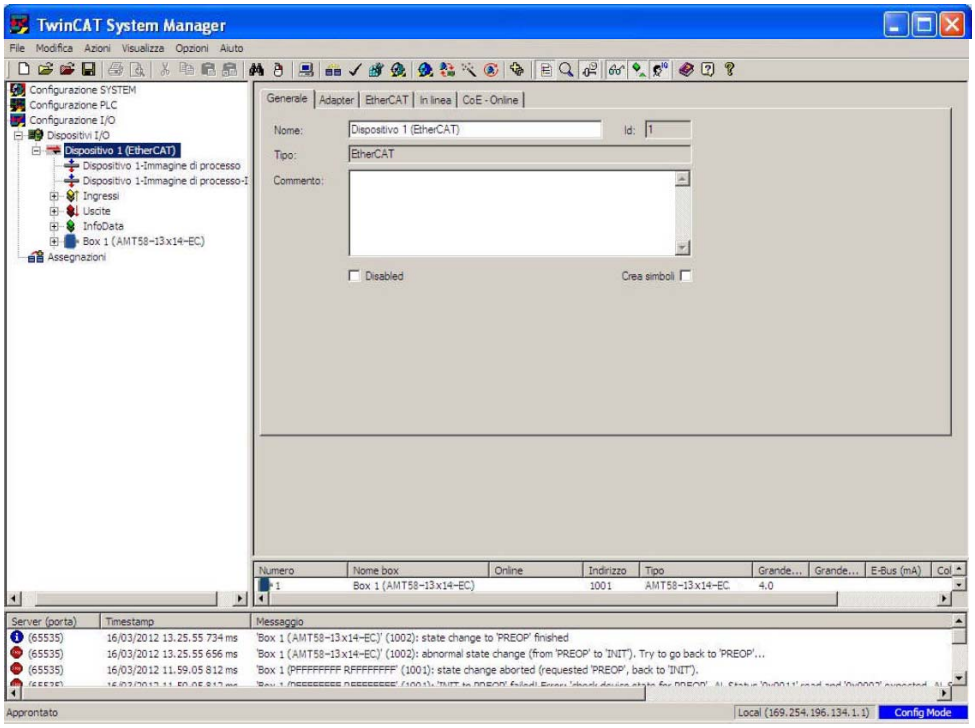

5.7 Firmware upgrade

WARNING
Firmware upgrade process has to be accomplished by skilled and competent personnel. If the upgrade is not performed according to the instructions provided or a wrong or incompatible firmware program is installed then the unit may not be updated correctly, in some cases preventing the unit from working.

WARNING
The XML file version, the firmware version and the EEProm version must always comply. For example: if the firmware version is H1_S4 (Hardware version: 1; Software version: 4), it is mandatory that the EEProm version is S4, therefore you must then install the XML file version V4.

WARNING
It is mandatory that in an EtherCAT network all devices are provided with the same version of the firmware, EEProm and XML file. So when you need to replace an old encoder installed in your network, then you must either upgrade all the encoders in the network to the last version compatible with the new encoder; or you must downgrade the new encoder to the older version compatible with the encoders already installed in the network.

Firmware is a software program which controls the functions and operation of a device; the firmware program, sometimes referred to as “user program”, is stored in the flash memory integrated inside the unit. Datalogic encoders are designed so that the firmware can be easily updated by the user himself. This allows Datalogic Automation s.r.l. to make new improved firmware programs available during the lifetime of the product.
Typical reasons for the release of new firmware programs are the necessity to make corrections, improve and even add new functionalities to the device.
The firmware upgrading program consists of a single file having .EFW extension. It is downloadable from the web or released by Datalogic Automation s.r.l.

WARNING
You must upgrade the EEProm before upgrading the firmware.

1. In the left pane of the TwinCAT System Manager main window press the Box (AMT58-ECAT) item of the encoder you need to update: some tabbed pages for configuring and managing the device will appear in the right pane. Enter the Online page.

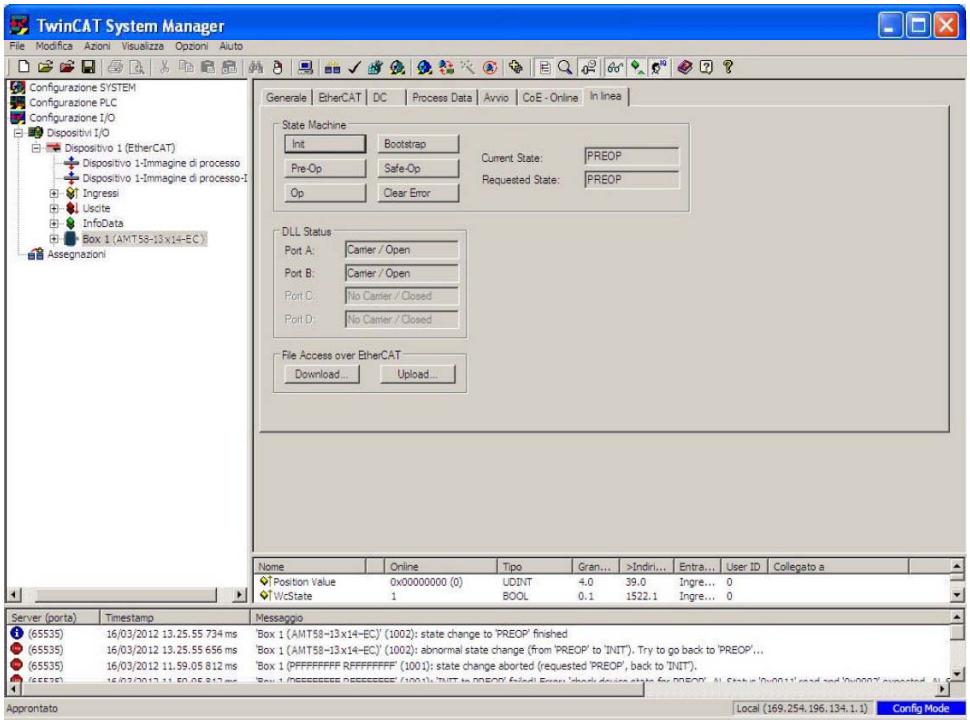

2. Press the Bootstrap button in the State Machine box; in the BOOT state the encoder is ready to accept the firmware upgrade download process (the BOOT message appears next to the Current State item in the same box).

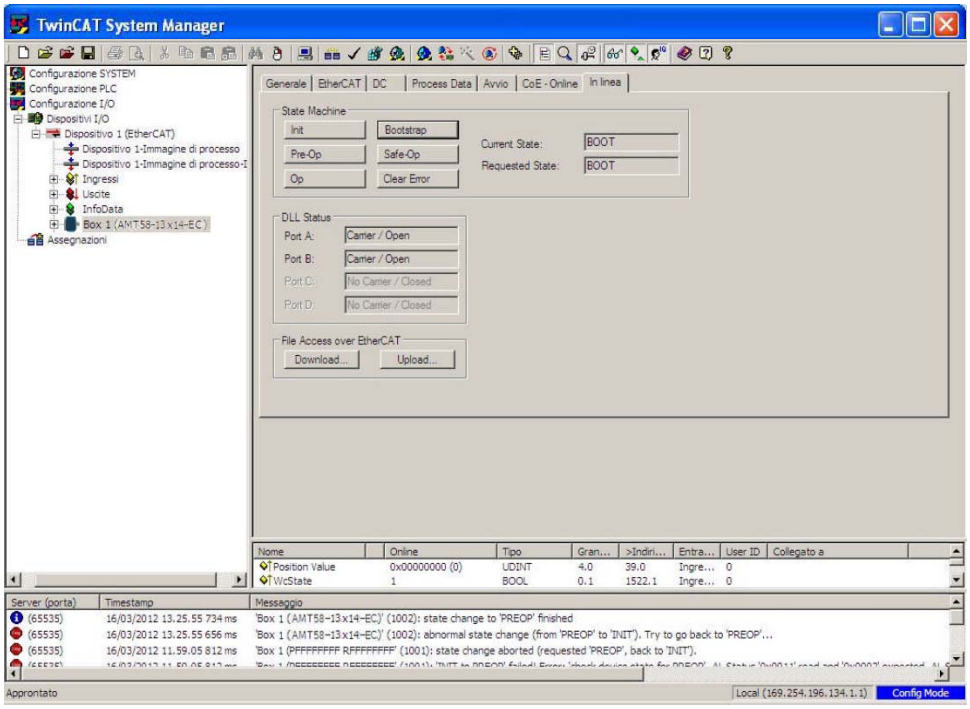

3. Now press the Download... button in the File Access Over EtherCAT box; in the Open window that appears select the

.EFW file provided to upgrade the firmware; please make sure you select the file of your own model you need to upgrade (for example: if you have to upgrade an H- series multiturn encoder then you must select the file **ECATFW_AMT58_Hx_Sy.efw**; finally press the Open button.

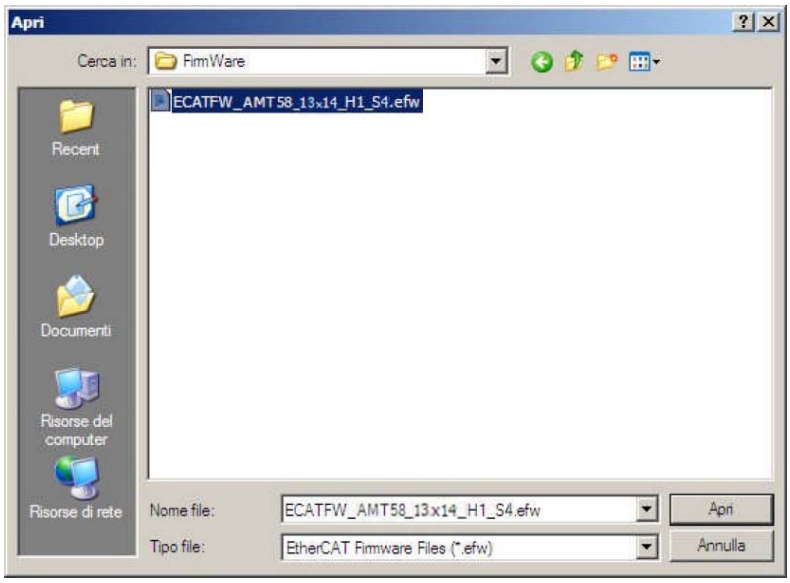

NOTE
In the .EFW file Hx is the hardware version of the encoder, while Sy is the software version.

4. In the Edit FoE Name page that appears on the screen enter the password 0x00000000 next to the Password (hex) item below in the page and then press the OK button to confirm. Now wait until the firmware file saving process is carried out. The progress bar below in the page displays the progress of the operation.

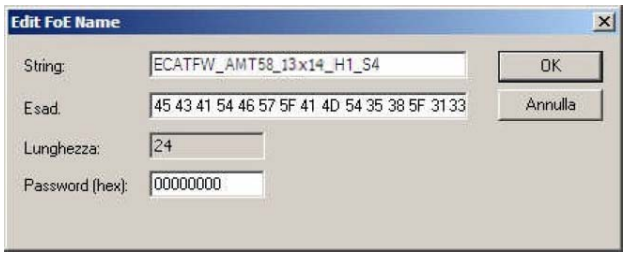

5. To check whether the firmware upgrade procedure has been completed successfully enter the Online page in the TwinCAT System Manager main window and press the Pre-Op button in the State Machine box; if everything is ok, the encoder enters the PREOPERATIONAL state (the PREOP message appears next to the Current State item in the same box).

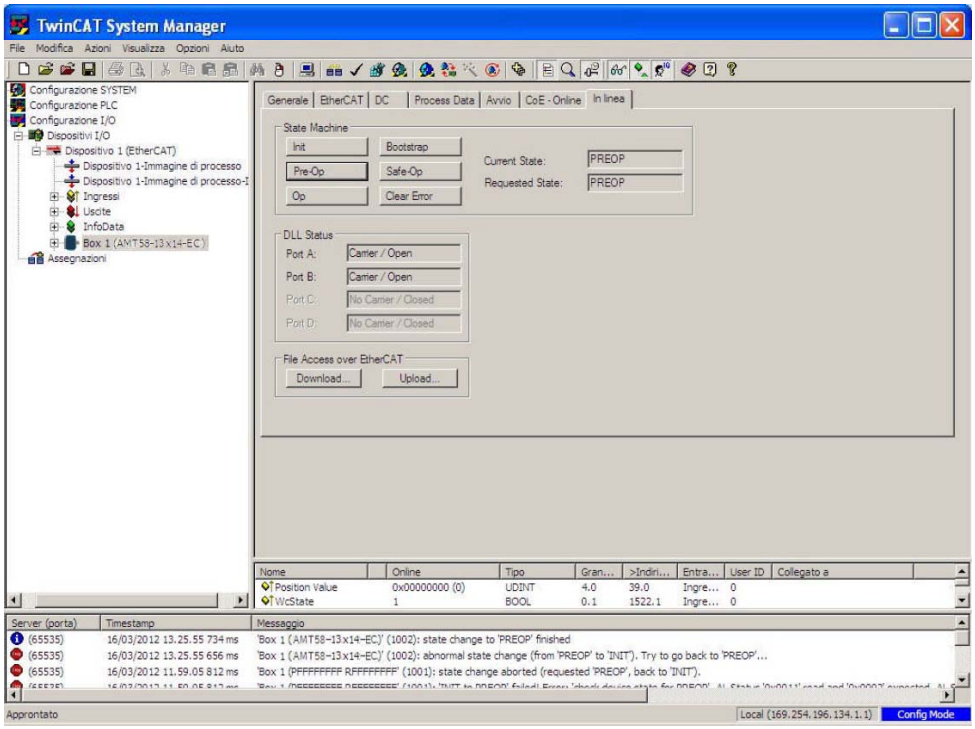

6 - EtherCAT® interface

6.1 Basic Information on EtherCAT® Protocol

EtherCAT protocol is designed to use the standard Ethernet dataframes for issuing data; in addition, and as regards the hardware, it is not necessary to install dedicated Masters for establishing and managing the EtherCAT communication because standard Ethernet network cards can be used. This results in an advantage in terms of lower costs and simplicity of use because Ethernet network cards are used in standard personal computers and are easily commercially available.
An EtherCAT bus can be viewed as a single and large Ethernet device that receives and sends Ethernet telegrams; it can be considered an Ethernet subnet supported by an Ethernet dataframes structure.
However this “subnet” must be fitted with one only EtherCAT Master controller and several EtherCAT Slaves, but no Ethernet controller with downstream microprocessor must be present.
Here follows an Ethernet frame structure with EtherCAT:

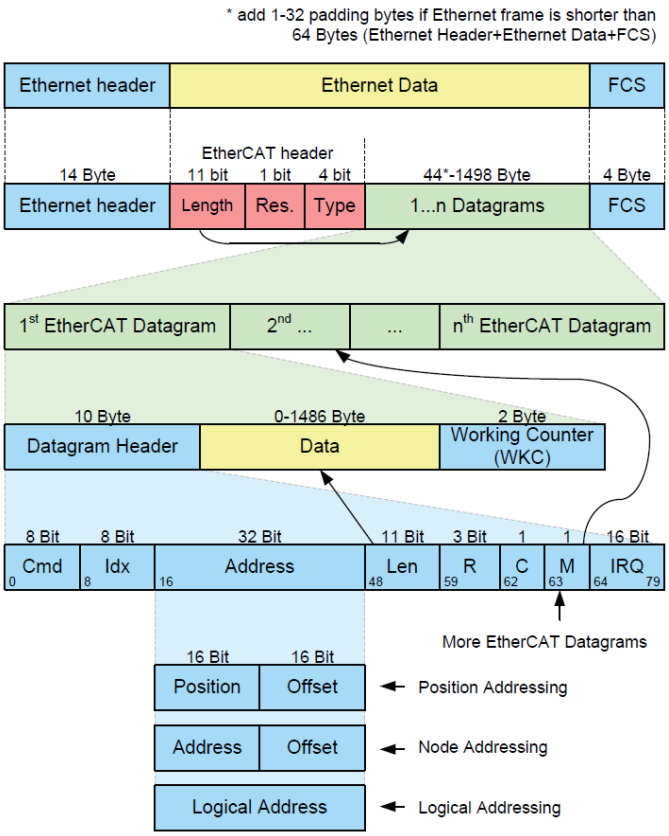

Inside the Ethernet frames data are transmitted among Master and Slaves using PDO (process data objects) protocol. Each PDO message has inside one or more addresses for issuing data to Slaves; data + address/es (and additional elements such as a validation checksum) joined together forms an EtherCAT telegram (Datagram).An EtherCAT frame can contain several telegrams and often a complete control cycle requires more than one frame.

6.1.1 Data transfer

Usually, in a data bus system, Master controller sends online a data request and then waits for data to be processed and sent back from each Slave node; this does not comply with a real-time system because Master receives data from Slaves in different moments and the whole system cannot be synchronized.
In EtherCAT the real-time characteristic of the system is quite improved because data are processed “on-the-fly”, using one single frame to acquire all data from all Slaves.
In fact the frame sent by the Master is read by each Slave node data is addressed to while the telegram passes through the device; similarly, input data is inserted while the telegram passes through. Then the telegram is forwarded to the next device. Telegrams are only delayed by a few nanoseconds.
The last Slave issues back the complete frame to the Master with all the requested data (again passing through all the Slaves).

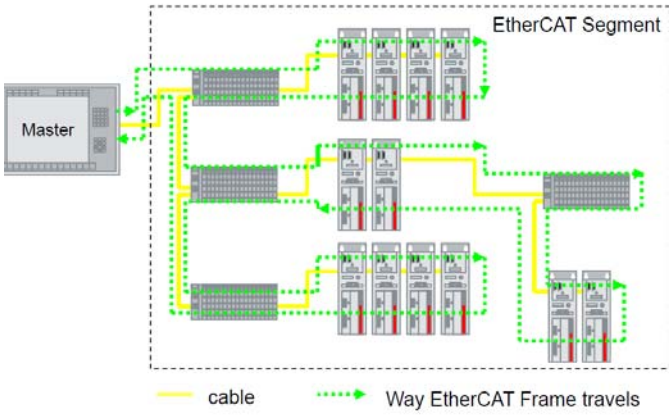

This efficient data flow is guaranteed by the 100BASE-TX full-duplex structure of EtherCAT bus which is fitted with two separated lines for transmitting and receiving data.
Moreover the protocols exchange takes place inside the hardware and it is thus independent from CPU and software processing.

6.1.2 ISO/OSI Layer model

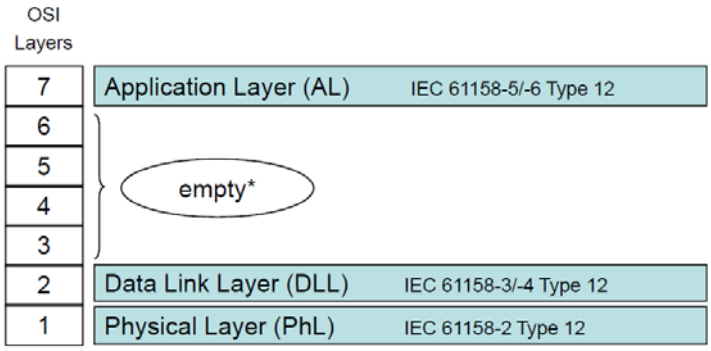

* “empty” means that the layer behaviour exists, but is not shown explicitly.

6.1.3 Topology

Several topologies of connection are supported by EtherCAT networks: line, tree, daisy-chain, star, …). Furthermore EtherCAT networks can be configured in almost any topology in the same structure. The maximum length of the cable between two Slaves is 100 m; standard EtherCAT cables commercially available can be used.
The choice of the topology depends on the structural characteristics of the plant and it is made in order to reduce the complexity and time for cabling.
Inside an EtherCAT network up to 65535 devices can be connected.
Some topology examples are shown in the Figures below:

LINE topology:

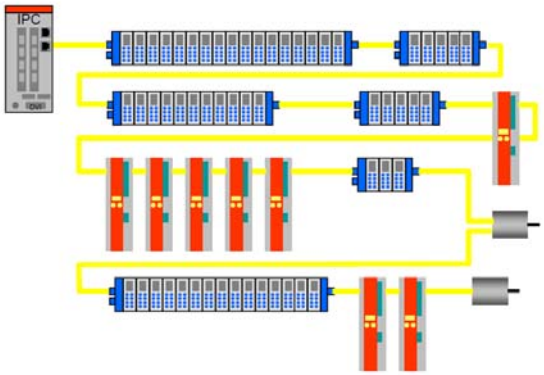

TREE topology:

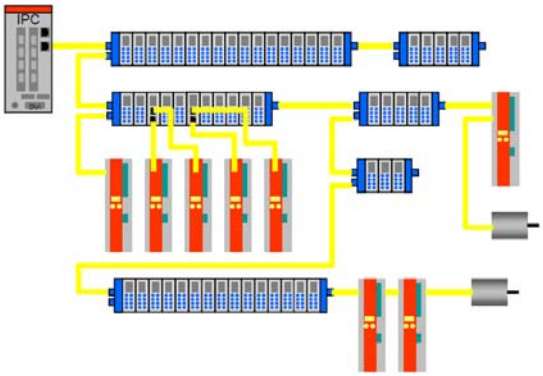

DAISY CHAIN with drop lines topology:

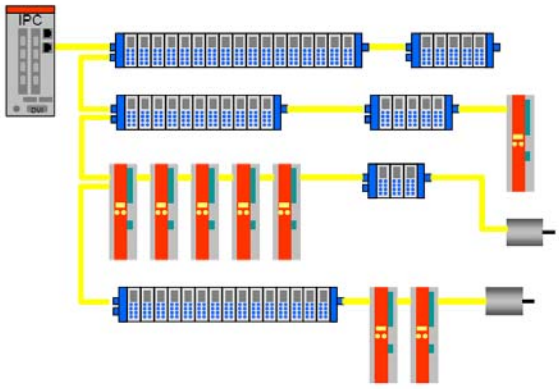

6.1.4 Line Termination

EtherCAT network needs no line termination because the line is terminated automatically; in fact every Slave is able to detect the presence of downstream Slaves.
An EtherCAT Slave is able to detect the presence of the signal in the outgoing line (Port 0) or in the return line (Port 1).
If the Slave is not able to detect the signal in its return line then it closes the communication ring by short-circuiting the TX signal of its outgoing line with the RX signal of its return line; in this way a telegram received through the outgoing line is processed and sent back through the TX of the return line.
The Slave sends a “carrier signal” or a telegram on TX of the outgoing line continuously and, once the next Slave is connected again, a signal on RX of the return line is detected again; so the short circuit is removed and the telegrams are sent on TX of the outgoing line.

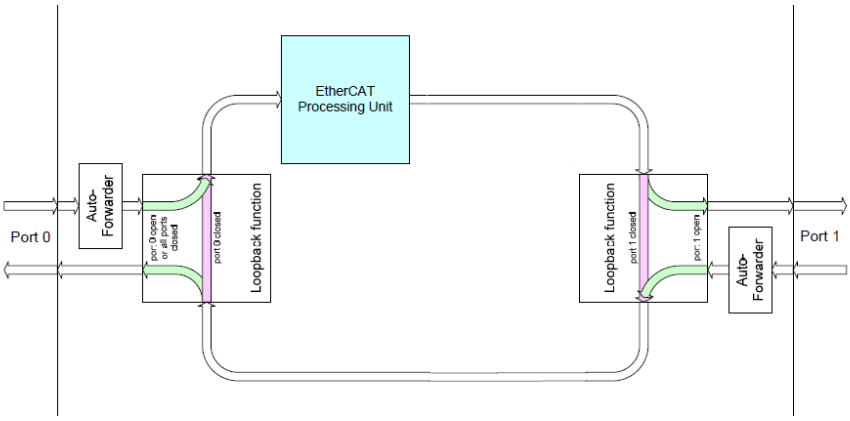

6.1.5 Addressing

It is not necessary to assign a physical address to the device (for instance using a dip-switch) because the addressing of the Slave is automatic at power on during the initial scanning of hardware configuration.

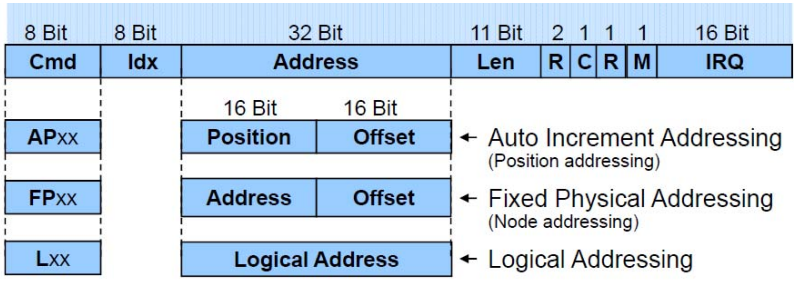

The field for addressing is 32 bits long; there are three kinds of addressing:

- Auto Increment Addressing = Position Addressing: 16 bits indicates the physical position of the Slave inside the network while 16 bits are scheduled for local memory addressing; when the Slave receives the frame then it increments the position address and the Slave receiving address 0 is the addressed device;
- Fixed Addressing = 16 bits indicates the physical address of the Slave inside the network while 16 bits are scheduled for addressing the local memory;
- Logical Address = the Slave is not provided with its own individual address, but it can read and write data in a section of the total memory space available (4 Gigabytes).

6.1.6 Communication mode

Datalogic encoders with EtherCAT interface support the following operating modes:

- FreeRun: asynchronous mode;
- SM3 event: synchronous mode;
- DC: distributed clock synchronization mode (synchronous mode).

For a system that requires high performances in real time (closed-loop applications) we suggest using DC mode; if real time requirements are not so mandatory SM3 or Freerun modes can be used instead.
A reference parameter is the “Jitter”: it represents the temporal fluctuation of the instant data sampling; in other words data sampled by the micro-controller is available in ECAT DPRAM memory after a certain time and the measure of the variability over time is the “jitter”.

FreeRun

Asynchronous mode; encoder position is sampled directly from EtherCAT frame sent by the Master; position update is performed by an internal timer of the controller every 100 microseconds.

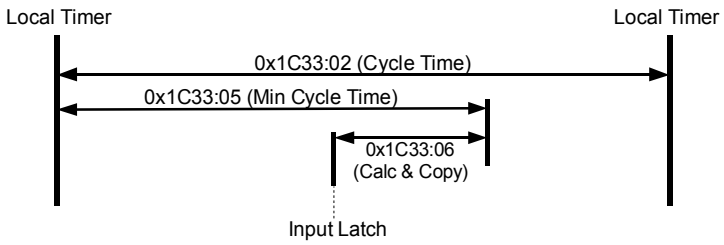

This operating mode has a high sampling jitter (up to 100 microseconds) and can be chosen only when cycle times are quite longer than the jitter if we want to ensure a sufficient real-time system performance.

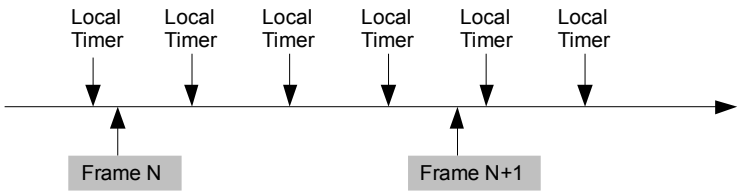

Description	Min	Typ	Max	
Jitter	0		100	µsec
Cycle Time	1000		64000	µsec

Synchronous with SM3

In this mode data is sampled and then copied into Sync Manager buffer as soon as previous data was read from the Master (SM event); in this way new sampled data is synchronous with Master readings.

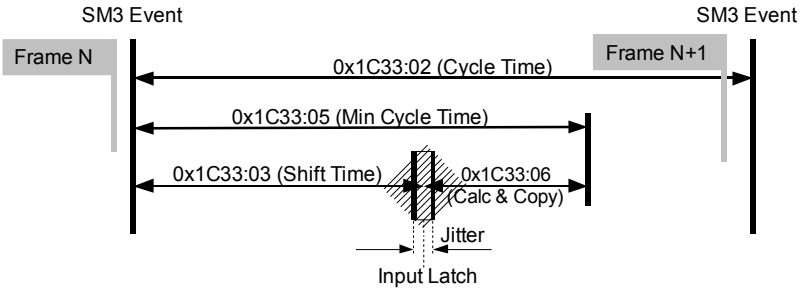

New data will be read by the Master at next cycle (following SM3 event), so if cycle time is too long, data could be relatively old for a real-time system.
The main advantage is that data is updated exactly when Master is reading (synchronous mode).

Description	Min	Typ	Max	
Jitter	0		7,2	µsec
Cycle Time	62,5		64000	µsec

Synchronous with DC SYNC0

In this operating mode data is sampled and then copied into Sync Manager buffer simultaneously at SYNC0 event generated by the ESC capture/compare unit.
Time required for accomplishing these operations is set in object **1C33 Sync Manager input parameter**; in particular object **03 Shift Time** (1C33hex, sub3) and object **06 Calc and Copy time** (1C33hex, sub6).

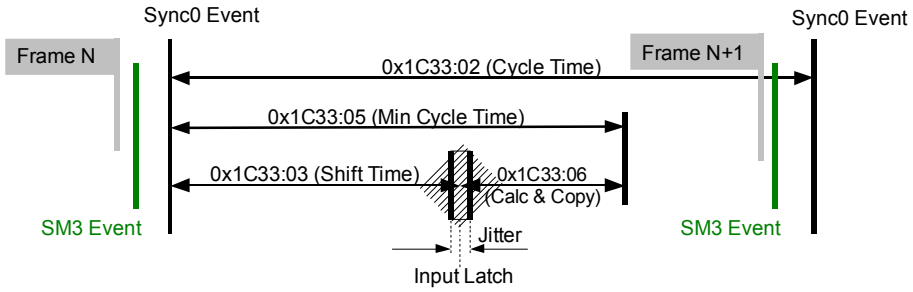

In this operating mode “Jitter” is a fundamental parameter in the sampling of two consecutive data. The main advantage of this mode is that there is a direct relation between the sampling instant and the absolute time of the system; in this way, if we know the shift times of the Slaves, we can have an exact image of the system at a given moment (with a tolerance equal to jitter).

Description	Min	Typ	Max	
Jitter	0	100	200	µsec
Cycle Time	62,5		64000	µsec

6.1.7 EtherCAT State Machine (ESM)

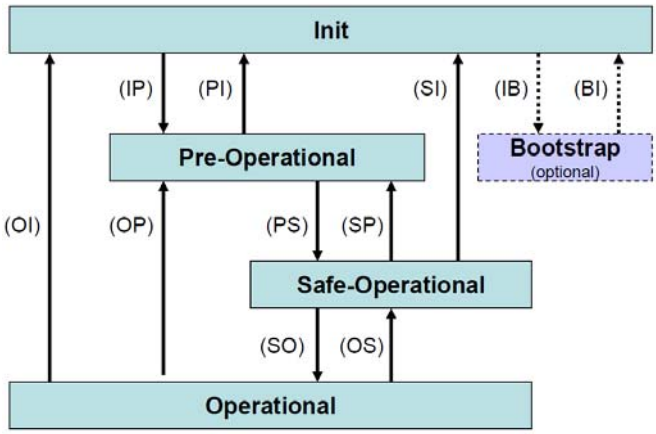

EtherCAT Slave is a state machine; communication and operating characteristics depend on the current state of the device:

- INIT: it is the default state after power on; in this state there is not direct communication between Master and Slave on the Application Layer; some configuration registers are initialized and the Sync Managers are configured;PRE-OPERATIONAL: in this state mailbox is active; both Master and Slave can use the mailbox and its protocols for exchanging specific initialization parameters of the application. Exchange of Process Data (PDO) is forbidden;SAFE-OPERATIONAL: in this state Master and Slave can issue only input process data, while output process data are still in SAFE-OPERATIONAL state;OPERATIONAL: in this state Master and Slave are enabled to send both input process data and output process data.

6.1.8 Slave configuration

The configuration of the Slave communication characteristics (Sync Manager configuration, addresses, synchronization modes, PDO mapping, …) can be made both using the XML file (EtherCat Slave Information - ESI) or loading data directly from EEPROM (Slave Information Interface SII).

EEPROM content (SII):

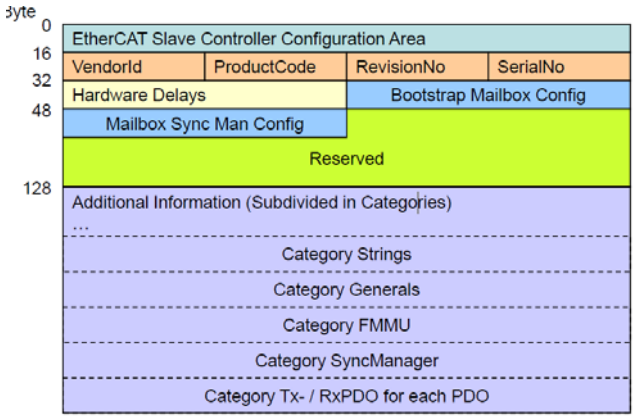

6.1.9 Timing and Synchronization

The main feature of EtherCAT is its almost ideal representation of a real-time system.
Hence the Master has to synchronize all the Slaves at the same time in order to build a system where all nodes have the same reference time; this goal can be achieved by using “distributed clocks”.
Master downloads its clock into one of the salves (customarily the first Slave) which becomes the reference clock for all the Slaves in the network; so it has the task of synchronizing the other Slaves. Master controller periodically sends a special synchronization-telegram where the reference Slave writes its own “current time”. This telegram is then sent to all the other Slaves that, in this way, provide for a new re-synchronization of their own clock in order to avoid possible drifts.
This synchronization of the reference time is very important in order to have a snapshot of the system and accordingly to take simultaneous actions in high sensitive applications such as the coordination in axis control operations.
Besides, EtherCAT Slave Controller (ESC) is fitted with a capture/compare unit that provides accurate synchronization signals (SYNC0 or interrupts): they are sent to the local micro-controller so that it is able to synchronize its own clock to Slaves clock.

Sync Manager
Sync Manager has the task of synchronizing data transfer between Master and Slave and prevents the same memory area from being written by different events.
There are two synchronization modes:

- 3-Buffer Mode;
- 1-Buffer Mode.

Synchronisation mode is initialized through the XML file or by loading data directly from EEPROM (SII).

Buffered Mode (3-Buffer Mode)
In this mode new data can be accessed at any time by both Master EtherCAT and ESC controllers; no timing restrictions are imposed.
Three buffers are necessary (three consecutive memory areas); one buffer is always available to ESC controller for writing and one buffer always contains updated data to be read by the Master.
Customarily this is used for process data communication.

Mailbox Mode (1-Buffer Mode)
In this mode a “handshake” between Master and Slave must be used; in fact one only memory buffer is available to both Master and Slave for writing and reading; the Master (or the Slave) is enabled to write only when the buffer is empty, that is when the Slave (or the Master) has finished reading the data buffer. And vice versa: the Master (or the Slave) is enabled to read only when the buffer is empty, that is when the Slave (or the Master) has finished writing the data buffer.

6.2 CANopen Over EtherCAT (CoE)

Datalogic encoders are Slave devices and support “CanOpen Over EtherCAT” (COE) mode for data transfer. In particular, they support the “Device profile for encoders”, Class 2.
For any omitted specification on CANopen® protocoll, please refer to “CiA Draft Standard 301” and “CiA Draft Standard 406” documents available at the address www.can-cia.org.
For any omitted specification on EtherCAT® protocoll, please refer to “ETG.1000 EtherCAT Specification” document available at the address www.ethercat.org.

6.2.1 XML file

EtherCAT® encoders are supplied with their own XML file **AMT58-xxx-13x14-EC** (see at www.datalogic.com). At the same address you can also download the most recent files to update both the firmware and the EEProm of the encoder. For older versions of the files please contact Datalogic Automation s.r.l. After Sales Service Dept. For any information on the firmware upgrade procedure refer to the section “5.7 Firmware upgrade” on page 21. For any information on the EEProm upgrade procedure refer to the section “5.6 EEProm upgrade” on page 26). XML file has to be installed on EtherCAT® Master device.

WARNING
Before installing the XML file please check that it is compatible with the firmware version and the EEProm version of the device; the XML file version, the firmware version and the EEProm version must always comply. For example: if the firmware version is H1_S4 (Hardware version: 1; Software version: 4), it is mandatory that the EEProm version is S4, therefore you must then install the XML file version V4.

WARNING
It is mandatory that in an EtherCAT network all devices are provided with the same version of the firmware, EEProm and XML file. So when you need to replace an old encoder installed in your network, then you must either upgrade all the encoders in the network to the last version compatible with the new encoder; or you must downgrade the new encoder to the older version compatible with the encoders already installed in the network.

If you want to know the firmware version of a device, press the Box (AMT58-ECAT): item in the left pane of the TwinCAT System Manager main window: some tabbed pages for configuring and managing the device will appear in the right pane. Enter the CoE - Online page and refer to the indexes Hardware version and Software version.

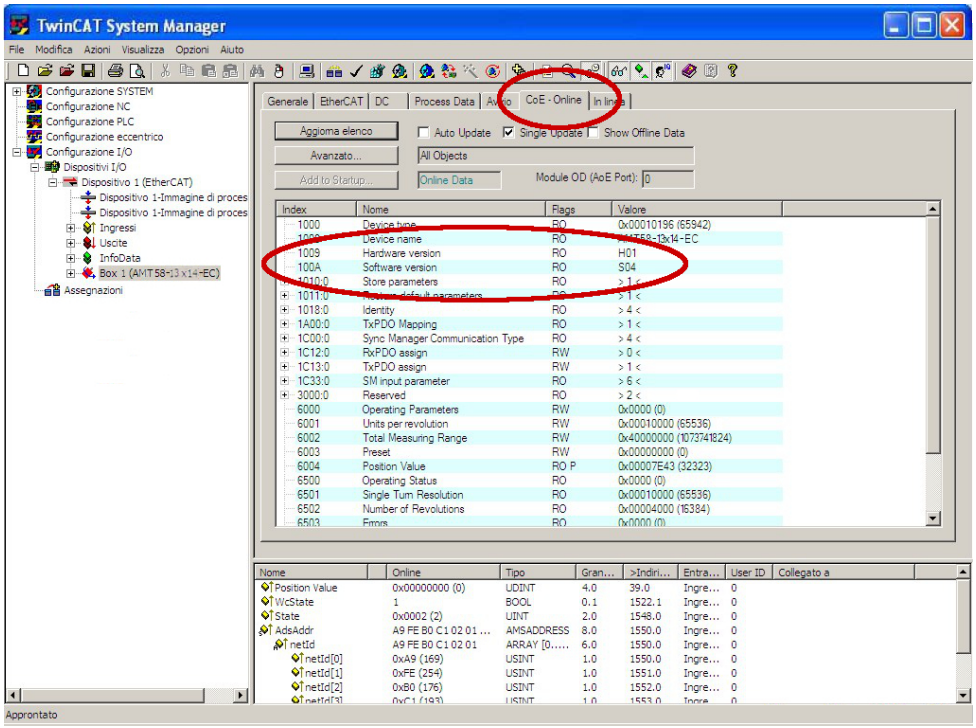

6.2.2 Communication messages

EtherCAT Datagram of CoE mode has the following structure:

Mbx Header	CoE Cmd			Cmd specific data
type = 3	Number	res	Type	
6 bytes	9 bits	3 bits	3 bits	0 … 1478 bytes

Mbx Header = 3 CoE mode

Number = 0 in case of SDO messages
≠ 0 in case of PDO messages, it defines the type of service

res reserved bits

Type = 0 reserved
= 1 Emergency message
= 2 SDO request
= 3 SDO response
= 4 Transmitted PDO (TxPDO)
= 5 Received PDO (RxPDO)
= 6 Remote transmission request of TxPDO
= 7 Remote transmission request of RxPDO
= 8 SDO information
= 9 … 15 reserved

Cmd specific data PDO messages: are the process data, e.g. position value
SDO messages: standard CANopen frame

Transmit (tx) or receive (rx) “Type” is viewed from Slave.

6.2.3 Process Data Objects (PDO)

PDO messages are used for transmitting or receiving process data in real time; data to be transmitted or received is defined in PDO Mapping and managed by Sync Manager PDO Mapping.

6.2.4 Service Data Objects (SDO)

SDO messages are issued via Mailbox (low priority data); Segmented SDO Service and SDO Complete Access are not supported (transfer of low size data and one sub-index at a time).

“CoE Cmd type” = 2 or 3

Structure of “Cmd specific data”:

Cmd specific data				
SDO control	Index	Sub index	Data	Data optional
8 bits	16 bits	8 bits	32 bits	1 … 1470 bytes

SDO control standard CANopen SDO Service

Index parameter index

Sub index parameter sub-index

Data parameter value

Data optional optionally, more then 4 bytes of data can be sent in one frame. Full mailbox size usable.

Index and sub-index values are described in the “Object dictionary”.

6.2.5 Object dictionary

In the following pages the objects implemented are listed and described as follows:

Index-subindex Object name
[data types, attribute]

- Index and sub-index are expressed in hexadecimal notation.
- Attribute:

ro = read only access
rw = read and write access

Unsigned16 data type:

Process data bytes	
byte 4	byte 5
LSByte	MSByte

Unsigned32 data type:

Process data bytes			
byte 4	byte 5	byte 6	byte 7
LSByte	…	…	MSByte

Standard objects

1000-00 Device type

[Unsigned32, ro]
Default = 0001 0196h= single turn encoder, DS 406
0002 0196h= multi turn encoder, DS 406

1008-00 Manufacturer Device Name

[String, ro]
It shows the manufacturer device name, expressed in ASCII code.
Default = 454D353878 = “AMT58” = multi turn encoder

1009-00 Hardware version

[String, ro]
It shows the hardware version of the device.

100A-00 Software version

[String, ro]
It shows the software version of the device.

1010-01 Store parameters

[Unsigned32, rw]
Use this object to save all parameters on the non-volatile memory.
Write "save" in ASCII code in the data bytes:

Master □ Encoder

Cmd specific data							
Cmd	Index		Sub	Data			
23	10	10	01	73	61	76	65

Encoder □ Master (confirmation)

Cmd specific data							
Cmd	Index		Sub	Data			
60	10	10	01	00	00	00	00

1011-01 Restore default parameters

[Unsigned32, rw]
This object allows you to restore all parameters to default values. The default parameters are set at the factory by Datalogic Automation engineers to allow the operator to run the device for standard operation in a safe mode. A list of machine data and relevant default parameters preset by Datalogic Automation s.r.l. engineers is available on page 56.
Write "load" in ASCII code in the data bytes:

Master □ Encoder

Cmd specific data							
Cmd	Index		Sub	Data			
23	11	10	01	6C	6F	61	64

Encoder □ Master (confirmation)

Cmd specific data							
Cmd	Index		Sub	Data			
60	11	10	01	00	00	00	00

NOTE
To save the default values execute the “Store parameters” function (see object **1010-01 Store parameters**). When the power is turned off, parameters not saved are lost.

1018 Identification object

01 Vendor number
[Unsigned32, ro]
Default = 0000 012Eh
02 Product number
[Unsigned32, ro]
03 Revision number
[Unsigned32, ro]
04 Serial number
[Unsigned32, ro]

1A00-01 PDO mapping parameter

[Unsigned32, rw]
This object contains the mapped position value of the encoder according to DS406 device profile.
Default = 6004 0020h

1C00 Sync Manager Communication Type

01 SM MailBox Receive (SM0)
[Unsigned8, ro]
Default = 1
02 SM MailBox Send (SM1)
[Unsigned8, ro]
Default = 2
03 SM PDO output (SM2)
[Unsigned8, ro]
Default = 3
04 SM PDO input (SM3)
[Unsigned8, ro]
Default = 4

1C12-00 Sync Manager RxPDO Assigned

[Unsigned8, ro]
This device does not support receive PDO messages.
Default = 0

1C13-01 Sync Manager TxPDO Assigned

[Unsigned32, ro]
This device uses TxPDO messages to send the position value.
Default = 0000 1A00hex

1C33 Sync Manager input parameter

Some sub-indexes of object 1C33hex are calculated dynamically and depend on both the encoder configuration (programmed resolution, counting direction, …) and the synchronization mode (SM or DC).

01 Sync Type
[Unsigned16, rw]
Default = 1

0: FreeRun; see on page 34;
1: Synchronous with SM3 Event; see on page 36;
2: DC mode synchronous with SYNC0 event; see on page 37.

02 Cycle time
[Unsigned32, ro]

this parameter depends on the Sync Type selected:
if “FreeRun”: interval between two position samplings (internal timer);
if “Synchronized with SM3”: min. interval between two SM3 events;
if “Synchronized with DC Sync0”: Sync0 cycle time.

03 Shift Time
[Unsigned32, ro]

Interval between the synchronization event and the moment of inputs latching from hardware. This parameter is calculated dynamically.

04 Sync modes supported
[Unsigned16, ro]
Default = 7

bit 0: FreeRun (supported)
bit 1: Synchronous with SM3 (supported)
bit 2: Synchronous with DC SYNC0 (supported)

05 Minimum cycle time
[Unsigned32, ro]

Max. duration of the encoder internal cycle time. This parameter is calculated dynamically and depends on the operating parameters and the position value.

06 Calc and Copy time
[Unsigned32, ro]

Time the internal micro-controller (DSP) needs to make calculations on latched optical reading of position and then copy updated data from local memory to ESC memory (Sync Manager) before they are available to EtherCAT. This parameter is calculated dynamically and depends on the operating parameters and the position value.

Device profile objects

6000-00 Operating parameters

[Unsigned16, rw]

Bit	Function	bit = 0	bit = 1
0	**Code sequence**	CW (clockwise)	CCW (counter clockwise)
1	not used		
2	**Scaling function**	disabled	enabled
3 … 15	not used		

Default = 0000h

Code sequence
This is intended to set if the encoder counting increments either when the shaft is rotating clockwise (CW) or when the shaft is rotating counter-clockwise (CCW). CW and CCW rotations are viewed from shaft end. Setting 0 (bit 0 = 0) causes the encoder counting to increment when the shaft is rotating clockwise; setting 1 (bit 0 = 1) causes the encoder counting to increment when the shaft is rotating counter-clockwise.

Scaling function
This is meant to enable / disable the scaling parameters **6001-00 Counts per revolution** and **6002-00 Total resolution**. When the scaling function is disabled (bit 2 = 0), the encoder uses its own physical resolution (i.e. hardware counts per revolution and number of hardware revolutions, see the encoder identification label and the objects **6501-00 Hardware counts per revolution** and **6502-00 Hardware number of turns**); otherwise, when the scaling function is enabled (bit 2 = 1), the encoder uses the resolution set next to the parameters **6001-00 Counts per revolution** and **6002-00 Total resolution** complying with the following relation:

$$\text{Transmitted position} = \frac{\textbf{6001-00 Counts per revolution}}{\textbf{6501-00 Hardware counts per revolution}} \times \text{Real position} \leq \textbf{6002-00 Total resolution}$$

6001-00 Counts per revolution

[Unsigned32, rw]
This object sets the number of distinguishable steps per revolution.
This value is considered only if the bit 2 **Scaling function** in the **6000-00 Operating parameters** item is set to “=1”.

To avoid counting errors, check that

$$\frac{\text{6501-00 Hardware counts per revolution}}{\text{6001-00 Counts per revolution}}$$

is an integer value.

Furthermore, after having set a new value next to the 6001-00 Counts for revolution parameter, make sure to meet also the following condition:

$$\frac{\text{6002-00 Total resolution}}{\text{6001-00 Counts per revolution}} \leq \text{Number of physical revolutions}$$

You are allowed to set whatever integer value lower than or equal to the maximum number of physical steps per revolution (see the hardware counts per revolution in the encoder identification label and the object 6501-00Hardware counts per revolution)..

Default =0000 2000h (8192)

WARNING
Every time you change the value in this object then you are required to set a new preset value (see 6003-00 Preset value)

6002-00 Total resolution

[Unsigned32, rw]
This object sets a custom number of distinguishable steps over the total measuring range.
This value is considered only if the bit 2 **Scaling function** in the **6000-00 Operating parameters** item is set to “=1”.
This values results from:
6001-00 Counts per revolution * **number of desired revolutions**.
You are allowed to set whatever integer value lower than or equal to the **overall hardware resolution** (see the encoder identification label).
The overall hardware resolution results from:
6501-00 Hardware counts per revolution * **6502-00 Hardware number of turns**.

Default =0800 0000h (134217728)

NOTE
To avoid counting errors we recommend values which are power of 2 (2^n: 2, 4, …, 2048, 4096, 8192,…) to be set next to the objects **6001-00 Counts per revolution** and **6002-00 Total resolution**.

WARNING
If you have set the preset, when you change the value next to **6001-00 Counts per revolution** and/or **6002-00 Total resolution** parameters, then you must check the value in the **6003-00 Preset value** parameter and perform the preset operation.

6003-00 Preset value

[Unsigned32, rw]
This object allows to set the encoder position to a Preset value. Preset function is meant to assign a certain value to a desired physical position of the encoder. The chosen physical position will get the value set next to this item and all the previous and following positions will get a value according to it. For instance, this can be useful for getting the zero point of the encoder and the zero point of the application to match.
Default = 0000 0000h

WARNING
Check the value in the **6003-00 Preset value** parameter and perform the preset operation every time you change the value next to **6001-00 Counts per revolution** and/or **6002-00 Total resolution** parameters.

NOTE

- If the scaling function is disabled (bit 2 **Scaling function** in the parameter **6000-00 Operating parameters** = 0), **6003-00 Preset value** must be lower than or equal to the **total hardware resolution** (i.e. **6501-00 Hardware counts per revolution** □ **6502-00 Hardware number of turns**).
- If the scaling function is enabled (bit 2 **Scaling function** in the parameter **6000-00 Operating parameters** = 1), **6003-00 Preset value** must be lower than or equal to **6002-00 Total resolution**.

Set Preset value **6003-00 Preset value** (preset = 1000 = 3E8h)

Master □ Encoder

Cmd specific data							
Cmd	Index		Sub	Data			
23	03	60	00	E8	03	00	00

Encoder □ Master (Set confirmation)

Cmd specific data							
Cmd	Index		Sub	Data			
60	03	60	00	00	00	00	00

6004-00 Position value

[Unsigned32, ro]

This object contains the position value of the encoder, transmitted value is calculated considering the scaling values, bit 2 **Scaling function** of the object **6000-00 Operating parameters**.

6500-00 Operating status

[Unsigned16, ro]

Bit	Function	bit = 0	bit = 1
0	**Code sequence**	CW Clockwise	CCW Counter clockwise
1	not used		
2	**Scaling function**	Disabled	Enabled
3 … 15	not used		

Code sequence

It shows the currently set value that is entered through the bit 0 **Code sequence** in the parameter **6000-00 Operating parameters**. If the bit is “=0” the output encoder position value has been set to increment when the shaft rotates clockwise; if the bit is “=1” instead the output encoder position value has been set to increment when the shaft rotates counter-clockwise. For any further information on setting and using the counting direction function refer to **6000-00 Operating parameters** parameter on page 49.

Scaling function

It shows the currently set value that is entered through the bit 2 **Scaling function** in the parameter **6000-00 Operating parameters**. In other words, it is intended to show whether the scaling function is enabled or disabled. If the value is “=0” the scaling function is disabled; if the value is “=1” instead the scaling function is enabled. For any further information on setting and using the scaling function refer to the **6000-00 Operating parameters** parameter on page 49.

6501-00 Hardware counts per revolution

[Unsigned32, ro]
This object defines the physical number of distinguishable steps each turn given by the hardware.
To set a custom singleturn resolution see object **6001-00 Counts per revolution**.

6502-00 Hardware number of turns

[Unsigned32, ro]
This object defines the physical number of distinguishable turns given by the hardware.
Total hardware resolution = 6501-00 Hardware counts per revolution * 6502-00 Hardware number of turns.
To set a custom number of turns see objects **6001-00 Counts per revolution** and **6002-00 Total resolution**.

6503-00 Errors

[Unsigned16, ro]
The corresponding bits of supported errors are set (see object **6504-00 Supported errors**).

6504-00 Supported errors

[Unsigned16, ro]
Default = 0000h (No errors supported).

6505-00 Warnings

[Unsigned16, ro]
Bits of supported warnings are set (see object 6506-00 Supported warnings).

6506-00 Supported warnings

[Unsigned16, ro]
bit 12: wrong parameters loaded from flash memory at power on.
Default = 1000h

6509-00 Offset value

[Unsigned32, ro]
This object contains the Offset value. This value is the difference between the physical position of the encoder and the position relating **6003-00 Preset value**.

NOTE
To save new parameters execute the store parameters function (see object **1010-01 Store parameters**).
When the power is turned off, parameters not saved are lost.

6.2.6 SDO Abort codes

SDO transfer could be unsuccessful; causes of error are listed and described in the SDO Abort Codes (see ETG1000.6 par. 5.6.2.7.2 table 40).

6.2.7 Emergency Error Codes

Emergency Service is used by server for transmitting diagnostic messages to the client using MailBox; Error Codes are listed and described in the ETG1000.6 par. 5.6.4.2 table 50.

Error Code		Error Register	Diagnostic Data				
Byte (0)	Byte (1)	Byte (2)	Byte (3)	Byte (4)	Byte (5)	Byte (6)	Byte (7)

Error Code State Transition Errors of state machine:
(for detailed description see ETG1000.6 par. 5.6.4.3)
A000hex: transition error from PRE-OPERATIONAL to SAFE-OPERATIONAL
A001hex: transition error from SAFE-OPERATIONAL to OPERATIONAL
Encoder errors:
5000hex: Hardware error
5001hex: Diagnostic data (wrong parameters loaded from flash memory)

Error Register EtherCAT state machine current status (ESM)

Diagnostic Datainformation about possible error causes (see ETG1000.6 par. 5.6.4.3.2-5).

6.2.8 AL Status Error Codes

If the state transition requested by the Master through the “AL Control Register” is unsuccessful, Slave sets to 1 the “Error Indicator Bit” in “AL Status Register” and writes the cause of the error in “AL Status Code Register”.
Values and descriptions of “AL Status Code” are available in ETG1000.6 par.5.3.2 Table 11.

6.3 File Over EtherCAT (FoE)

Datalogic encoders are devices that allow the firmware update using the protocol "File over EtherCAT (FoE)".
For any specification on FoE protocoll, please refer to “ETG.1000 EtherCAT Specification” document available at the address www.ethercat.org.

7 – Default parameters list

Default values are expressed in hexadecimal notation.

Parameters list	Default values		
6000-00 Operating parameters	0000		
6001-00 Counts for revolution	0000 2000h (8192)		
6002-00 Total resolution	0800 0000h (134217728)		
6003-00 Preset value	00000 0000		

AMT58...PN

INSTRUCTION MANUAL

Absolute Encoders

DATALOGIC

Datalogic S.r.l.
Via S. Vitalino, 13
40012 Calderara di Reno (BO)
Italy
Tel. +39 051 3147011
Fax +39 051 3147205

© 2014-2021 Datalogic S.p.A. and /or its affiliates

All rights reserved. Without limiting the rights under copyright, no part of this documentation may be reproduced, stored in or introduced into a retrieval system, or transmitted in any form or by any means, or for any purpose, without the express written permission of Datalogic S.p.A. and/or its affiliates.

Owners of Datalogic products are hereby granted a non-exclusive, revocable license to reproduce and transmit this documentation for the purchaser's own internal business purposes. Purchaser shall not remove or alter any proprietary notices, including copyright notices, contained in this documentation and shall ensure that all notices appear on any reproductions of the documentation.

Electronic versions of this document may be downloaded from the Datalogic website (www.datalogic.com). If you visit our website and would like to make comments or suggestions about this or other Datalogic publications, please let us know via the "Contact" page.

Disclaimer

Datalogic has taken reasonable measures to provide information in this manual that is complete and accurate, however, Datalogic shall not be liable for technical or editorial errors or omissions contained herein, nor for incidental or consequential damages resulting from the use of this material. Datalogic reserves the right to change any specification at any time without prior notice.

Trademarks

Datalogic and the Datalogic logo are registered trademarks of Datalogic S.p.A. in many countries, including the U.S.A. and the E.U.

Patents

See www.patents.datalogic.com for patent list.

TABLE OF CONTENTS

PREFACE ..... **VI**
- **About this Manual** ..... **vi**
  - Manual Conventions vi
- **Technical Support** ..... **vii**
  - Support Through the Website vii
  - Reseller Technical Support vii

GLOSSARY OF PROFINET TERMS ..... **VIII**

LIST OF ABBREVIATIONS ..... **XII**

CHAPTER 1. SAFETY SUMMARY **1**
- **Safety** **1**
- **Electrical Safety** **1**
- **Mechanical Safety** **2**

CHAPTER 2. IDENTIFICATION **3**

CHAPTER 3. MECHANICAL INSTALLATION **4**
- **Solid Shaft Encoders** **4**
  - Customary installation 4
  - Installation using fixing clamps (code ST-58-KIT) 5
  - Installation using a flange (code ST-58-FLNG) 5
- **Hollow Shaft Encoders** **6**
  - AMT-58-H15 6

CHAPTER 4. ELECTRICAL CONNECTIONS **7**
- **PWR Power Supply Connector** **8**
- **P1 Port1 and P2 Port2 Connectors** **8**
- **Network Configuration: Cables, Hubs, Switches** **8**
- **Line Termination** **9**
- **MAC Address and IP Address** **9**
- **Ground Connection** **9**
- **Diagnostic LEDs** **10**
- **States** **12**
  - SETUP state 12
  - NW_INIT state 12
  - WAIT_PROCESS state 12
  - IDLE state 12
  - PROCESS_ACTIVE state 12
  - ERROR state 12
  - EXCEPTION state 12

CHAPTER 5. GETTING STARTED **13**
- **Quick start information** **13**
  - Setting the resolution and the scaling function 14
  - Reading the position 14
  - Setting and executing the preset 14
- **Configuring the encoder with Siemens TIA PORTAL V15** **15**

About TIA Portal 15
Project overview 15
Device view 17
Network view 17
Topology view 18
Network and communication settings 18
MAC Address 18
Installing the encoder under TIA Portal environment 19
Description of the GSDML file 19
Installing the GSDML file 20
Adding a node to the project 21
Establishing the bus connection 22
Inserting the telegrams 23
Module parameters 24
Device name and IP address at delivery 25
Setting the device name and the IP address 26
Compiling and transferring the project 27
Establishing an online connection (Online mode) 28
Closing an online connection 29
Diagnostics 30
Resetting the parameters to the default factory values 31
TO Technology Objects 34
Properties of a technology object (TO) 34
Installing the encoder as a technology object (TO) 34
Downloading the project and going online 38
Enabling the encoder 39
Setting and activating the preset value 42

CHAPTER 6. PROFINET INTERFACE 43
A brief introduction to Profinet 43
Profinet encoders from Datalogic 44
Overview of the encoder profiles 44
Application Class definition 45
Application Class 3 45
Application Class 4 45
Encoder Object model 46
Encoder Object architecture 47

CHAPTER 7. PROFINET IO DATA DESCRIPTION 48
Telegrams 48
Standard Telegram 81 48
Telegram 860 48

CHAPTER 8. CYCLIC DATA EXCHANGE - STD SIGNALS 50
List of the available standard signals 52
G1_XIST1 52
G1_XIST2 53
G1_XIST1_PRESET_VALUE 54
STW2_ENC 55
Control by PLC 55
Controller Sign-Of-Life 55
ZSW2_ENC 56
Control requested 56
Encoder Sign-Of-Life 56
G1_STW 57
Home position mode 57
Request set/shift of home position 58
Request absolute value cyclically 59
Activate parking sensor 59
Acknowledging a sensor error 59
G1_ZSW 60

NIST_B 60
Error codes in G1_XIST2 61

CHAPTER 9. ENCODER PARAMETERS 62
User parameter data 62
Type of encoder 63
Code sequence 63
Class 4 functionality 64
G1_XIST1 Preset control 64
Scaling function control 65
Alarm channel control 65
Compatibility Mode 66
Scaling function parameters 67
Measuring units / Revolution 67
Total measuring range 68
Maximum tolerated failures of Master Sign-Of-Life 69
Velocity measuring unit 69
Red Zone 70

CHAPTER 10. REAL-TIME CLASS COMMUNICATION 72
Real-time classes in PROFINET IO 72
Real-time class 2 (RT2) - Not synchronized 72
Real-time class 3 (IRT_TOP) (RT3) 72
Setting an isochronous communication 73
OB61 77
PIP (Process Image Partition) 77
Consistency 77

CHAPTER 11. ENCODER REPLACEMENT USING LLDP 78

CHAPTER 12. MEDIA REDUNDANCY PROTOCOL (MRP) 80
Setting MRP roles 81
Configuring the network topology 82
Interconnecting the ports in the Inspector window 83

CHAPTER 13. ENCODER STATE MACHINE 84
Normal operation diagram 85
Preset diagram 86
Parking sensor diagram 87
Error diagram 88
Acknowledgment of acknowledgeable sensor error 88
Acknowledgment of not acknowledgeable sensor error 89

CHAPTER 14. INTEGRATED WEB SERVER 90
Web Server Home Page 91
Encoder Position and Speed 92
Specific notes on using Internet Explorer 93
Encoder Information (Profinet Parameters) 93
Setting the Parameters 94
Setting and activating the preset 96
Firmware upgrade 98

CHAPTER 15. DEFAULT PARAMETER LIST 103

PREFACE

ABOUT THIS MANUAL

This Instruction Manual is provided for users seeking advanced technical information, including connection, programming, maintenance and specifications. The Quick Reference Guide (QRG) and other publications associated with this product can be downloaded free of charge from the website listed on the back cover of this manual.

Manual Conventions

The following conventions are used in this document:

The symbols listed below are used in this manual to notify the reader of key issues or procedures that must be observed when using the reader:

NOTE

Notes contain information necessary for properly diagnosing, repairing and operating the device.

CAUTION

The CAUTION symbol advises you of actions that could damage equipment or property.

WARNING

The WARNING symbol advises you of actions that could result in harm or injury to the person performing the task.

In this manual, to make it easier to understand and read the text, the following typographic conventions are used:

- parameters and objects of both Datalogic device and interface are colored in GREEN;
- alarms are colored in RED;
- states are colored in FUCSIA.

TECHNICAL SUPPORT

Support Through the Website

Datalogic provides several services as well as technical support through its website. Log on to (www.datalogic.com).

For quick access, from the home page click on the search icon 🔍, and type in the name of the product you're looking for. This allows you access to download Data Sheets, Manuals, Software & Utilities, and Drawings.

Hover over the Support & Service menu for access to Services and Technical Support.

Reseller Technical Support

An excellent source for technical assistance and information is an authorized Datalogic reseller. A reseller is acquainted with specific types of businesses, application software, and computer systems and can provide individualized assistance.

GLOSSARY OF PROFINET TERMS

PROFINET IO, like many other networking systems, has a set of unique terminology. The table below contains a few of the technical terms used in this guide to describe the PROFINET IO interface. Sometimes they also refer more specifically to the S7 programming environment. They are listed in alphabetical order.

Acyclic Communications	Unscheduled, on demand communications. Diagnostic messages from an IO Supervisor to an IO Device are Acyclic.
AP	Application Process - The application process running in the device. PROFINET supports a default Application Processes and additional profile specific application processes.
API	The value of the API (Application Process Identifier) parameter specifies the application that is processing the IO data. PROFINET standard IEC 61158 assigns profiles to certain APIs (PROFIdrive, PROFIslave) which are defined by the PROFINET User Organization. The standard API is 0.
Application class	An application class specifies a number of mandatory functions and addition optional functions to be supported by an IO device. The Profinet encoders can be configured as CLASS 3 and CLASS 4 PROFINET IO devices according to the encoder profile.
AR	Application Relation - The relationship between a PROFINET IO Controller and an IO device. A PROFINET IO device can support more than one Application Relationship.
Automation system	Programmable logic controller for the open-loop and closed-loop control of process chains in process and production engineering. The automation system consists of different components and integrated system functions depending on the automation task.
Bus	A bus is a communication medium connecting several nodes. Data can be transferred via serial or parallel circuits, that is, via electrical conductors or fiber optic.
Channel	A single IO point. A Channel can be discrete or analog.
Consumer Status	The Status an IO device provides to an IO Controller for the data it consumes from IO Controller.
CPU	Central Processing Unit - Central module of an automation system with a control and arithmetic unit, memory, operating system and interface for programming device.
CR	Communication Relationship - A virtual communication channel within an AR.
Cyclic Communications	Scheduled, repetitive communications. IO data and alarm transfers are cyclic.
Data block	In contrast to code blocks, data blocks (DB) do not contain Step 7 statements. They are used to save data, i.e. variable data which are processed by the user program. Global data blocks serve to accommodate user data which can be used by all other blocks.

DCP	Discovery Control Protocol - A communications protocol with PROFINET IO that allows an IO Controller or Supervisor to find every PROFINET IO device on a subnet.
Determinism	Determinism means that a system responds in a predictable (deterministic) manner.
Device name	Before an IO device can be addressed by an IO controller, it must have a device name. In PROFINET, this method was selected because it is simpler to work with names than with complex IP addresses.
Encoder Profile	The PROFINET profile for Encoders is intended to define a standard application interface for encoders. The profile is a supplement to the PROFIdrive profile, so it is mandatory to read the PROFIdrive profile before implementing the encoder profile.
Function	Functions (FC) are code blocks which can be programmed by the user. A FC does not have a "memory". Temporary variables as well as parameters transferred to the function when the latter is called are saved in a L stack. They are lost following processing of the FC.
Function block	Function blocks (FB) are code blocks with a "memory" which are programmed by the user. They have an assigned instance data block (instance DB) as memory. Parameters transferred to a FB as well as the static variables are saved in this data block. An FB contains a program which is always executed when the FB is called by another code block. Function blocks facilitate the programming of frequently repeated, complex functions.
Frame ID	The two-byte field in the Ethernet frame which defines the type of PROFINET IO message.
GSD	The properties of a PROFINET device are described in a GSD file (General Station Description) that contains all the information required for configuration. In PROFINET IO, the GSD file is in XML format. The structure of the GSD file conforms to ISO 15734, which is the world-wide standard for device descriptions.
GSDML	General Station Description Markup Language - The file containing the XML description of the PROFINET IO device.
IO Controller	Device used to address the connected IO devices. This means that the IO controller exchanges input and output signals with assigned field devices. The IO controller is often the controller on which the automation program runs.
IO Device	A decentralized field device that is assigned to one of the IO controllers (e.g. remote IO, encoders, valve terminals, frequency converters, switches, etc.).
IO Parameter Server	An IO Parameter Server is a server station, usually a PC, for loading and saving the configuration data (records) of IO Devices.
IO Supervisor	Programming device, PC or HMI device used for commissioning and diagnostics of IO Controllers and IO Devices.
IP address	The IP address is the name of the unit in a network using the Internet protocol.
IRT	Synchronized transmission procedure for the cyclic exchange of IRT data between PROFINET devices. A reserved bandwidth within the send clock is available for the IRT IO data. The reserved bandwidth ensures that the IRT data can be transmitted at reserved, synchronized intervals whilst remaining uninfluenced even by other greater network loads (e.g. TCP/IP communication or additional real time communication). The "high flexibility" enables simple planning and expansion of the system. A topological configuration is not required.

MAC address	The MAC address is an identifier unique worldwide consisting of two parts: the first 3 bytes are the manufacturer ID and are provided by IEE standard authority; the last three bytes represent a consecutive number of the manufacturer.
Module	Modules are user defined components that plug into slots. Modules can be real or virtual.
NRT	Non Real Time - The non Real Time PROFINET IO Channel. Configuration and diagnostic messages are transferred over the NRT Channel.
Organization block	A range of organization blocks (OB) are designed to execute the user program. OBs are the interface interface between the user program and the operating system of a CPU. They permit event-controlled processing of special program components within the user program. The order in which the user program is executed is defined in the organization blocks.
Profile	Profiles define application-specific functionality to ensure the openness of PROFIBUS and PROFINET is utilized consistently. PI Profiles can cover simple devices such as encoders by defining how signals are used and how they are physically connected. However, profiles are increasingly covered more complex systems or requirements. Profiles such as PROFIdrive and PROFIsafe deliver active functionality as well. An advanced profile covering active power management for end devices like lasers and robots is now under development with the aim of bringing significant reductions in energy consumption for the automotive industry. Profiles guarantee quicker system design and they support faster device interchange, promoting competition amongst vendors, increased choice for users and full interoperability.
Provider Status	The Status an IO device provides to an IO Controller with the data transferred to the Controller.
Proxy	A device which maps non PROFINET IO data to PROFInet.
Real-time	Real-time means that a system processes external events within a defined time. If the reaction of a system is predictable, one speaks of a deterministic system. The general requirements for real-time are therefore: deterministic response and defined response time.
RT	Real Time - The Real Time PROFINET IO Channel. I/O and Alarm Data are transferred over the RT Channel.
Slot	A group of one or more Subslots. Slots can be real or virtual.
Standard signal	The encoder profile defines a series of standard signals which are used to configure the IO data.
Submodule	A component of a module that is plugged into a subslot. A submodule is real or virtual.
Subslot	A group of one or more channels. Subslots can be real or virtual.
Sync domain	All PROFINET devices that are to be synchronized via PROFINET IO with IRT must belong to a sync domain. The sync domain consists of precisely one sync master and at least one sync slave. IO controllers and switches can hold the role of a sync master or sync slave. Other IO devices support only the role as sync slave.
System function	System functions (SFC) are integral functions in the operating system of a S7 CPU. In addition, SFCs are frequently called implicitly by SFBs. SFCs can be called by the user program like normal functions. SFCs are used to implement a number of important system functions for Profinet IO.

System function block	System function blocks (SFB) are integral functions in the operating system of a S7 CPU. SFBs can be called by the user program like normal function blocks. SFBs are used to implement a number of important system functions for Profinet IO.
TCP/IP	The Ethernet system is designed solely to carry data. It is comparable to a highway as a system for transporting goods and passengers. The data is actually transported by protocols. This is comparable to cars and commercial vehicles transporting passengers and goods on the highway. Tasks handled by the basic Transmission Control Protocol (TCP) and Internet Protocol (IP) (abbreviated to TCP/IP): 1. The sender splits the data into a sequence of packets. 2. The packets are transported over the Ethernet to the correct recipient. 3. The recipient reassembles the data packets in the correct order. 4. Faulty packets are sent again until the recipient acknowledges that they have been transferred successfully.
Telegram	A telegram is a rigidly defined bit stream carrying data. A telegram specifies the data length and the type of data which is sent to and from the IO controller. The encoder profile can support the Standard Telegrams 81, 82, 83 and 84.
Topology	Network structure. Commonly used structures: • Line topology; • Ring topology; • Star topology; • Tree topology.
Transmission rate	Data transfer rate (in bps).
User program	The user program contains all instructions, declarations and data for signal processing required to control a plant or a process. It is assigned to a programmable module (for example CPU) and can be structured in smaller units (blocks).

LIST OF ABBREVIATIONS

The table below contains a list of abbreviations (in alphabetical order) which may be used in this guide to describe the PROFINET IO interface. Sometimes they also refer more specifically to the S7 programming environment..

AR	Application Relation
API	Application Process Identifier
C-LS	Controller's Sign-Of-Life
CR	Communication Relation
DB	Data block
DO	Drive object
DO-LS	Driver Object Sign-Of-Life
DU	Drive Unit
EO	Encoder Object
EU	Encoder Unit
FB	Function block
FC	Function
I&M	Identification & Maintenance
IRT	Isochronous Real Time Ethernet
IRT Flex	IRT "High Flexibility"
IRT Top	IRT "High Performance"
GSDML	General Station Description Markup Language
IO	Input/Output
IP	Internet Protocol
LLDP	Link Layer Discovery Protocol
LS	Sign-Of-Life
MAC	Media Access Control
MAP	Module Access Point
MLS	Master Sign-Of-Life
OB	Organization block
PAP	Parameter Access Point
PI	PROFIBUS and PROFINET International
RT	Real Time Ethernet
SFB	System function block

SFC	System function
TCP	Transmission Control Protocol
T_{MAPC}	Master Application Cycle Time

CHAPTER 1
SAFETY SUMMARY

SAFETY

- Always adhere to the professional safety and accident prevention regulations applicable to your country during device installation and operation;
- installation and maintenance operations have to be carried out by qualified personnel only, with power supply disconnected and stationary mechanical parts;
- device must be used only for the purpose appropriate to its design: use for purposes other than those for which it has been designed could result in serious personal and/or the environment damage;
- high current, voltage and moving mechanical parts can cause serious or fatal injury;
- warning! Do not use in explosive or flammable areas;
- failure to comply with these precautions or with specific warnings elsewhere in this manual violates safety standards of design, manufacture, and intended use of the equipment;
- Datalogic assumes no liability for the customer's failure to comply with these requirements.

ELECTRICAL SAFETY

- Turn OFF power supply before connecting the device;
- connect according to explanation in section “Electrical connections”;
- in compliance with 2014/30/EU norm on electromagnetic compatibility, following precautions must be taken:
  - before handling and installing the equipment, discharge electrical charge from your body and tools which may come in touch with the device;
  - power supply must be stabilized without noise; install EMC filters on device power supply if needed;
  - always use shielded cables (twisted pair cables whenever possible);
  - avoid cables runs longer than necessary;
  - avoid running the signal cable near high voltage power cables;
  - mount the device as far as possible from any capacitive or inductive noise source; shield the device from noise source if needed;
  - to guarantee a correct working of the device, avoid using strong magnets on or near by the unit;
  - minimize noise by connecting the shield and/or the connector housing and/or the frame to ground. Make sure that ground is not affected by noise. The connection point to ground can be situated both on the device side and on user's side.

- The best solution to minimize the interference must be carried out by the user. Provide the ground connection as close as possible to the encoder. We suggest using the ground point provided in the cap, use one TCEI M3 x 6 cylindrical head screw with two tooth lock washers.

MECHANICAL SAFETY

- Install the device following strictly the information in the section 3 “Mechanical installation”;
- mechanical installation has to be carried out with stationary mechanical parts;
- do not disassemble the unit;
- do not tool the unit or its shaft;
- delicate electronic equipment: handle with care; do not subject the device and the shaft to knocks or shocks;
- respect the environmental characteristics of the product;
- unit with solid shaft: in order to guarantee maximum reliability over time of mechanical parts, we recommend a flexible coupling to be installed to connect the encoder and user's shaft; make sure the misalignment tolerances of the flexible coupling are respected;
- unit with hollow shaft: the encoder can be mounted directly on a shaft whose diameter has to respect the technical characteristics specified in the purchase order and clamped by means of the collar and, when requested, the anti-rotation pin.

CHAPTER 2
IDENTIFICATION

Device can be identified through the ordering code, the serial number and the MAC address printed on the label applied to its body. Information is listed in the delivery document too.

Please always quote the ordering code, the serial number and the MAC address when reaching Datalogic for purchasing spare parts or needing assistance.

For any information on the technical characteristics of the product, please refer to the technical catalogue.

CHAPTER 3
MECHANICAL INSTALLATION

CAUTION

Installation and maintenance operations must be carried out by qualified personnel only, with power supply disconnected. Shaft and mechanical components must be in stop.

NOTE

For any information on the mechanical data and the electrical characteristics of the encoder, please refer to the technical catalogue.

SOLID SHAFT ENCODERS

- Mount the flexible coupling 1 on the encoder shaft;
- fix the encoder to the flange 2 (or to the mounting bell) by means of the screws 3;
- secure the flange 2 to the support (or the mounting bell to the motor);
- mount the flexible coupling 1 on the motor shaft;
- make sure the alignment tolerances of the flexible coupling 1 are respected.

Customary installation

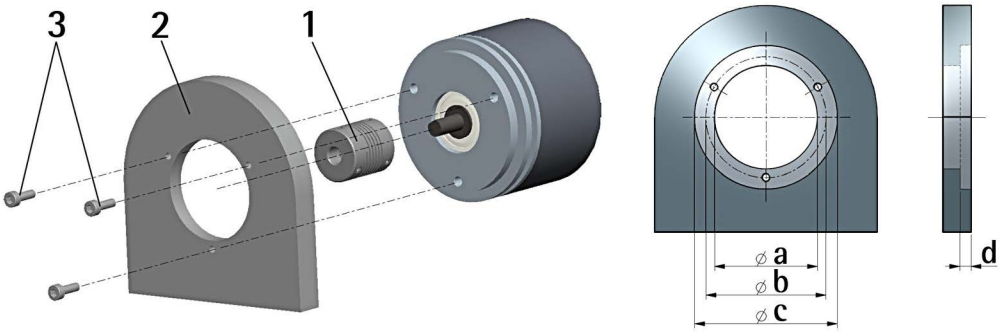

	a [mm]	b [mm]	c [mm]	d [mm]
AMT58	36 H7	48	-	-

Installation using fixing clamps (code ST-58-KIT)

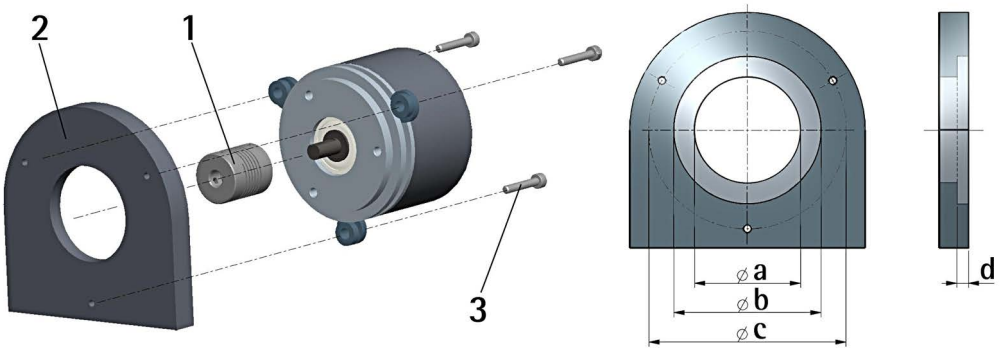

	a [mm]	b [mm]	c [mm]	d [mm]
AMT58	36 H7	-	67	-

Installation using a flange (code ST-58-FLNG)

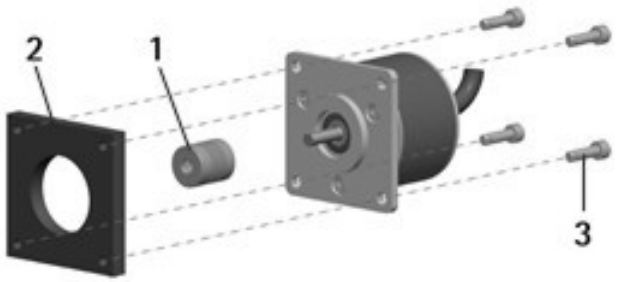

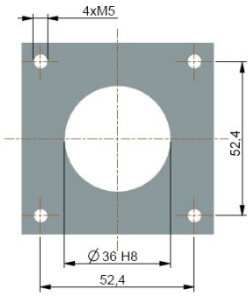

HOLLOW SHAFT ENCODERS

AMT-58-H15

- Mount the encoder on the motor shaft using the reducing sleeve 8 (if supplied). Avoid forcing the encoder shaft;
- fasten the fixing plate 4 to the rear of the motor using two M3 cylindrical head screws 5;
- fix the collar 3 to the encoder shaft (apply threadlocker to screw 3).

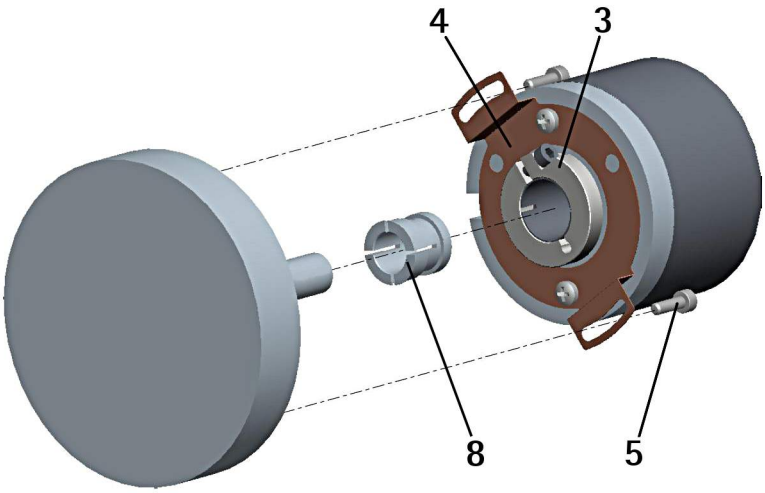

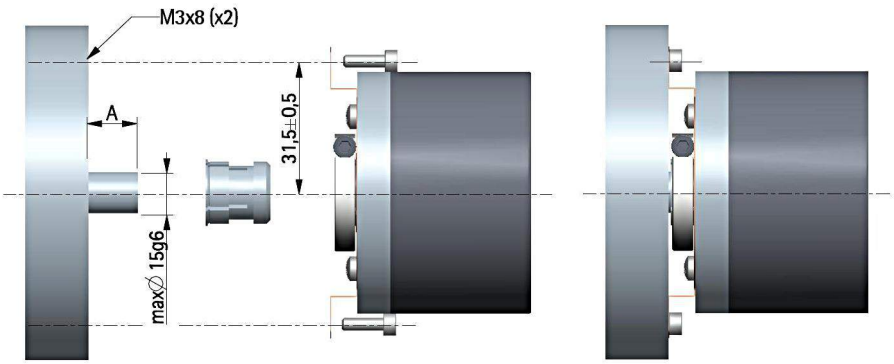

A - min. 8 mm, max. 18 mm

CHAPTER 4
ELECTRICAL CONNECTIONS

CAUTION

Power supply must be turned off before performing any electrical connection!

Installation, electrical connection and maintenance operations must be carried out by qualified personnel only, with power supply disconnected. Mechanical components must be in stop. Do not remove the connection cap of the encoder. Damage may be caused to internal components.

No user serviceable parts inside the connection cap!

Figure 1. Connectors and diagnostic LEDs

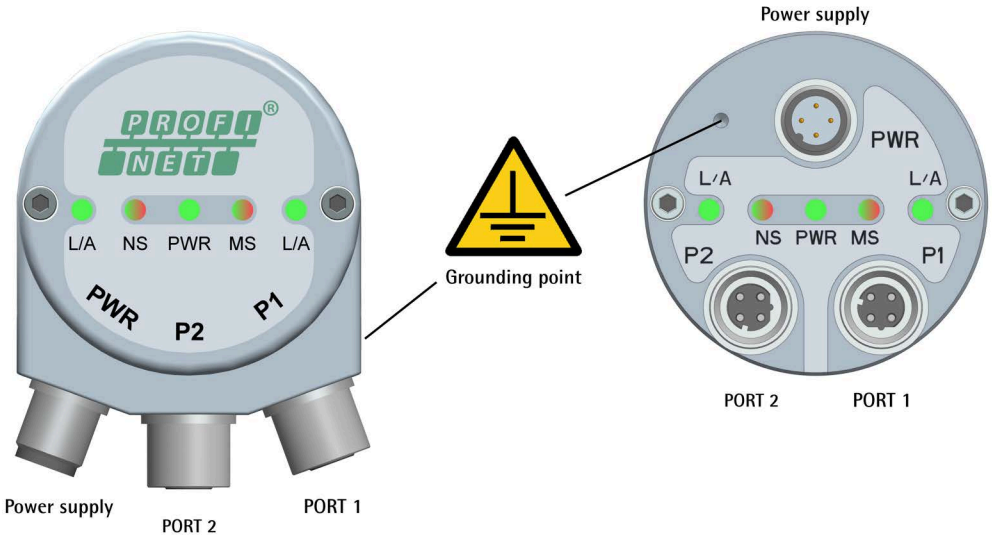

PWR POWER SUPPLY CONNECTOR

M12 4-pin male connector with A coding is used for power supply.

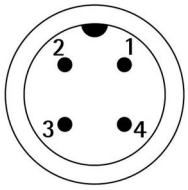

DESCRIPTION	PIN
+10Vdc +30Vdc	1
not connected	2
0Vdc	3
not connected	4

P1 PORT1 AND P2 PORT2 CONNECTORS

Two M12 4-pin female connectors with D coding are used for Ethernet connection through port 1 and port 2.

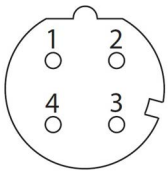

DESCRIPTION	PIN
Tx Data +	1
Rx Data +	2
Tx Data -	3
Rx Data -	4

The ports are equal and interchangeable - if only one connection is required, either port can be used. The Ethernet interface supports 100 Mbit/s, full-duplex operation.

NETWORK CONFIGURATION: CABLES, HUBS, SWITCHES

PROFINET is based on a 100 Mbps, full-duplex Ethernet network. Faster communication is also possible on all transmission sections (e.g., between switches, PC systems, or camera systems).

Using Ethernet several topologies of connection are supported by Profinet networks: line, tree, daisy-chain, star, etc. Furthermore, Profinet networks can be configured in almost any topology in the same structure.

The connection of PROFINET IO field devices occurs exclusively with switches as network components. Switches typically integrated in the field device are used for this (with 2 ports assigned). PROFINET-suitable switches must support “autonegotiation” (negotiating of transmission parameters) and “autocrossover” (autonomous crossing of send and receive lines).

Cables and connectors comply with the Profinet specifications. The cabling guide defines for all Conformance Classes a 2-pair cable according to IEC 61784-5- 3.

Standard Profinet cables commercially available can be used.

The maximum segment length for electrical data transmission with copper cables between two nodes (field devices or switches) is 100 m. The copper cables are designed uniformly in AWG 22. The installation guide defines different cable

types, whose range has been optimally adapted to general requirements for industry. Sufficient system reserves allow industry-compatible installation with no limitation on transmission distance.

The PROFINET cables conform to the cable types used in industry:

- PROFINET Type A: Standard permanently routed cable, no movement after installation
- PROFINET Type B: Standard flexible cable, occasional movement or vibration
- PROFINET Type C: Special applications: for example, highly-flexible, constant movement (trailing cable or torsion)

For complete information please refer to IEC 61918, IEC 61784-5-13 and IEC 61076-2-101.

To increase noise immunity only S/FTP or SF/FTP cables must be used (CAT-5).

The maximum cable length (100 meters) predefined by Ethernet 100Base-TX must be compulsorily fulfilled.

Regarding wiring and EMC measures, the IEC 61918 and IEC 61784-5-13 must be considered.

LINE TERMINATION

Profinet network needs no line termination because the line is terminated automatically. Every Slave is able to detect the presence of the downstream Slaves.

MAC ADDRESS AND IP ADDRESS

The unit can be identified in the network through the MAC address and the IP address. MAC address has to be intended as a permanent and globally unique identifier assigned to the unit for communication on the physical layer; while the IP address is the name of the unit in a network using the Internet protocol. MAC address is 6-byte long and cannot be modified. It consists of two parts, numbers are expressed in hexadecimal notation: the first three bytes are used to identify the manufacturer (OUI, namely Organizationally Unique Identifier), while the last three bytes are the specific identifier of the unit. The MAC address can be found on the label applied to the encoder. The IP address (and the subnet mask) must be assigned by the user to each interface of the unit to be connected in the network. For additional information on the MAC address refer to "MAC Address" on page 18. For additional information on the IP address refer to "Setting the device name and the IP address" on page 26.

GROUND CONNECTION

To minimize noise connect properly the shield and/or the connector housing and/or the frame to ground. Connect properly the cable shield to ground on user's side. Datalogic's EC- pre-assembled cables are fitted with shield connection to the connector ring nut in order to allow grounding through the body of the device. Datalogic's CN- connectors have a plastic gland, thus grounding is not possible. If metal connectors are used, connect the cable shield properly as recommended by the manufacturer. Anyway make sure that ground is not affected by noise. It is recommended to provide the ground connection as close as possible to the device. We suggest using the ground point provided in the cap (see Figure 1, use 1 TCEI M3 x 6 cylindrical head screw with 2 tooth lock washers).

DIAGNOSTIC LEDS

Five LEDs located in the cap of the encoder (see Figure 1) are meant to show visually the operating or fault status of the encoder and the Profinet interface. The meaning of each LED is explained in the following tables.

L/A Link/Activity LED for port 2 P2 (green)

It shows the state and the activity of the physical link (port 2 P2).

L/A LED	DESCRIPTION	MEANING
OFF	No link	Link not active, no activity on port 2 P2
ON green	Link	Port 2 P2 link active, no activity
FLICKERING green	Activity	Port 2 P2 link active, activity on port 2 P2

NS Network Status LED (green / red)

It shows the current state of the network.

NS LED	DESCRIPTION	MEANING
OFF	Offline	• The device is switched OFF • No connection with IO controller established
ON green	Online (RUN)	• Connection with IO controller established • IO controller in RUN state
FLASHING green once	Online (STOP)	• Connection with IO controller established • IO controller in STOP state or IO data is wrong • IRT synchronization not carried out
BLINKING green	Blink	Used by engineering tools to identify the node in the network
ON red	Fatal event	A mayor internal error has occurred (this indication is combined with the red MS Module Status LED)

NS LED	DESCRIPTION	MEANING
FLASHING red once	Station name error	Name of the node not set
FLASHING red twice	IP address error	IP address of the node not set
FLASHING red three times	Configuration error	Expected identification differs from real identification

PWR Power LED (green)

It shows the power supply state.

PWR LED	DESCRIPTION	MEANING
OFF	Power OFF	The encoder power supply is switched OFF.
ON	Power ON	The encoder power supply is switched ON.

MS Module Status LED (green / red)

It shows the state of the Profinet device.

MS LED	DESCRIPTION	MEANING
OFF	Not initialized	The power supply is switched OFF or the device is in SETUP or NW_INIT state (see "SETUP state" on page 12).
ON green	Normal operation	The device has shifted from the NW_INIT state (see "NW_INIT state" on page 12).
FLASHING green once	Diagnostic event(s)	Diagnostic event(s) active
ON red	Exception error	The device is in EXCEPTION state (see "EXCEPTION state" on page 12).
	Fatal event	A major internal error has occurred (this indication is combined with the red NS Network Status LED)

MS LED	DESCRIPTION	MEANING
Alternating red/green	Firmware update	Do NOT power off the encoder. Switching the encoder off during this phase could cause permanent damage

L/A Link/Activity LED for port 1 P1 (green)

It shows the state and the activity of the physical link (port 1 P1).

LED	DESCRIPTION	MEANING
OFF	No link	Link not active, no activity on port 1 P1
ON green	Link	Port 1 P1 link active, no activity
FLICKERING green	Activity	Port 1 P1 link active, activity on port 1 P1

While the encoder is performing its power up testing, the NS network status indicator and the MS module status indicator shall perform a test sequence.

STATES

Here follows the list of the available states.

SETUP state

The setup of the device is in progress. The encoder may not send commands to the application in this state. If setup is successful, the module will shift to the NW_INIT state; or, in case of failure, it will shift to the EXCEPTION state.

NW_INIT state

The device is currently performing network-related initialization tasks. Telegrams now contains Process Data (if such data is mapped), however the network Process Data channel is not active yet. If the process is successful, the module will shift to the WAIT_PROCESS state; or, in case of failure or if a serious error occurs (i.e. any error which prevents the system from proceeding), it will shift to the EXCEPTION state.

WAIT_PROCESS state

The network Process Data channel is temporarily inactive. The system will consider the Read Process Data as not valid.

IDLE state

The network interface is idle. The Read Process Data may be either updated or static (unchanged).

PROCESS_ACTIVE state

The network Process Data channel is active and error free. Perform normal data handling.

ERROR state

There is at least one serious network error. The Read Process Data shall be regarded as not valid. Write Process Data could still be forwarded to the Master, so the application must keep this data updated.

EXCEPTION state

The module has ceased all network participation due to an error. This state is unrecoverable, i.e. the system must be restarted in order to be able to exchange network data.

CHAPTER 5
GETTING STARTED

QUICK START INFORMATION

The following instructions allow the operator to quickly and safely set up the device in a standard operational mode.

For complete and detailed information please read the mentioned pages thoroughly.

- Mechanically install the device, see Mechanical Installation, starting on page 4;
- execute the electrical and network connections, see Electrical Connections, starting on page 7;
- switch on the +10Vdc +30Vdc power supply;
- install the GSDML file, see "Installing the GSDML file" on page 20;
- insert the Datalogic module and type of telegram in the PROFINET-IO system, see "Adding a node to the project" on page 21;
- set the device name, see "Setting the device name and the IP address" on page 26;
- set the IP address and the subnet mask to the node, see "Setting the device name and the IP address" on page 26; the default address is **0.0.0.0**;
- to set the parameters, enter the **Module parameters** page, see "Module parameters" on page 24; in this page it is possible, for example, to set the singleturn resolution or the total resolution, to enable the scaling function or to change the counting direction; after entering new values, you must download the parameters to the device; for the complete list of the default parameters see Default Parameter List, starting on page 103;
- to enable the scaling function, change the counting direction and execute the preset, the **Class 4 functionality** parameter must be enabled (="1"), see "Class 4 functionality" on page 64.

NOTE

It is possible to configure the parameters also by entering the web server via browser (see "Integrated Web Server" on page 90**): in the Set Encoder Registers page (see "**Setting the Parameters" on page 94**), the operator can either enter the desired value or set it through the drop-down box in the input field under the WRITE column; then he has to press the button between the boxes to confirm. The value that is currently set can be found in the box on the right under the READ column.**

Setting the resolution and the scaling function

- If you want to use the physical resolution of the encoder, please check that the **Scaling function control** parameter is disabled (=”0”), see "Scaling function control" on page 65; this parameter is active only if the **Class 4 functionality** parameter is enabled (=”1”), see "Class 4 functionality" on page 64;
- on the contrary, if you need a custom resolution, you must enable the scaling function by setting the **Scaling function control** parameter to =”1” first and then set the required resolution values:
  - open the **Module parameters** page and set the singleturn resolution next to the **Measuring units / Revolution** parameter, see "Module parameters" on page 24 and "Measuring units / Revolution" on page 67;
  - open the **Module parameters** page and set the total resolution next to the **Total measuring range** parameter, see "Module parameters" on page 24 and "Total measuring range" on page 68.

NOTE

It is possible to enable the scaling function and set a custom resolution also by entering the web server via browser (see "Integrated Web Server" on page 90**): in the Set Encoder Registers page (see "**Setting the Parameters" on page 94**), the operator can either enter the desired value or set it through the drop-down box in the input field under the WRITE column; then he has to press the button between the boxes to confirm. The value that is currently set can be found in the box on the right under the READ column.**

Reading the position

- To read the value of the absolute position use the Standard Telegram 81, see "Standard Telegram 81" on page 48; see also "G1_XIST1" on page 52 and "G1_XIST2" on page 53.

NOTE

It is possible to read the current position of the encoder also by entering the web server via browser (see "Integrated Web Server" on page 90**): in the Encoder position and speed page (see "**Encoder Position and Speed" on page 92**), the current position of the encoder is displayed. For example, it is “11562 in** Figure 3 on page 92**.**

Setting and executing the preset

To set and execute the preset proceed as follows:

- check that the **Control by PLC** bit 10 of the **STW2_ENC** control word is =”1”, see "Control by PLC" on page 55;
- check that the **Class 4 functionality** parameter is enabled (=”1”), see "Class 4 functionality" on page 64;
- check that the **G1_XIST1 Preset control** parameter is enabled (=”0”), see "G1_XIST1 Preset control" on page 64;
- set the preset value by means of Telegram 860 and **G1_XIST1_PRESET_VALUE** signal, see "G1_XIST1_PRESET_VALUE" on page 54;
- execute the preset by forcing high the **Request set/shift of home position** bit 12 in the **G1_STW** control word, see "Request set/shift of home position" on page 58;
- the encoder replies by forcing high the **Set/shift of home position executed** bit 12 in the **G1_ZSW** status word, see "Request set/shift of home position" on page 58;
- the Master must set back to 0 the **Request set/shift of home position** bit 12 in the **G1_STW** control word, see "Request set/shift of home position" on page 58;

- the **Set/shift of home position executed** bit 12 in the G1_ZSW status word is set back to 0, see "Request set/shift of home position" on page 58; see "Preset diagram" on page 86.

NOTE

It is possible to set and activate the preset value also by entering the web server via browser (see "Integrated Web Server" on page 90**): in the Set Encoder Preset page (see "**Setting and activating the preset" on page 96**), the operator can enter the desired Preset value and activate it.**

CONFIGURING THE ENCODER WITH SIEMENS TIA PORTAL V15

NOTE

If the encoder is used as a TO Technology Object, please refer to "TO Technology Objects" on page 34**.**

About TIA Portal

TIA Portal stands for Totally Integrated Automation Portal. It is an integrated engineering framework for controllers, HMI and drives. It integrates several SIMATIC products into a single software in order to increase productivity and efficiency.

TIA portal can be used to configure both the PLC and the visualization in a homogeneous system. Data is saved in a single project. Tools for programming (STEP 7) and displaying (WinCC) are not distinct programs, but editors of a system that has access to and uses a common database. One single user interface is used to enter all functions used for displaying and programming.

Project overview

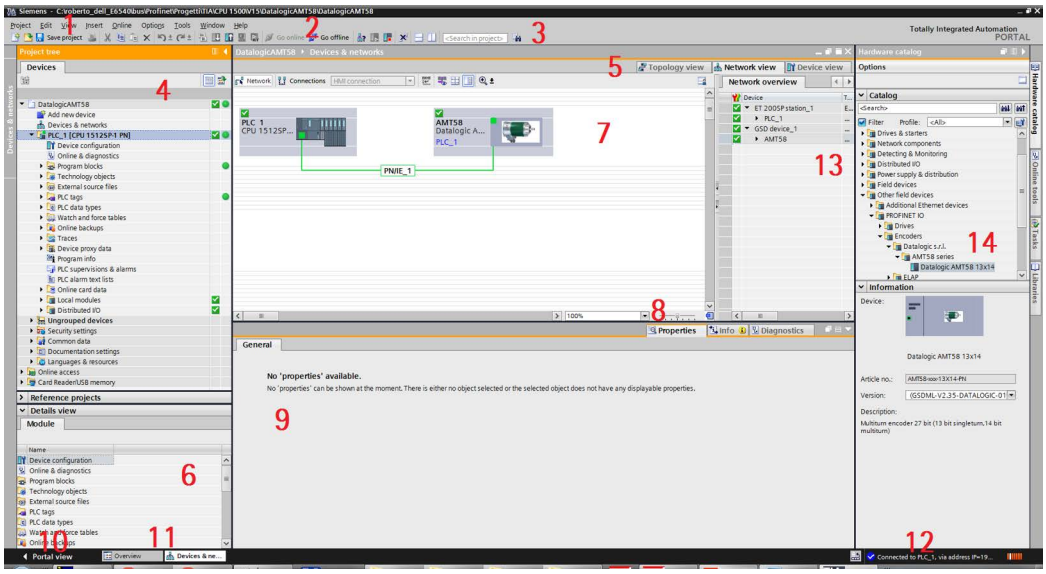

1. Title bar: the name of the project is displayed in the title bar.

2. Menu bar: the menu bar contains all the commands that you require for your work.

3. Toolbar: the toolbar provides you with buttons for commands you will use frequently. This gives you faster access to these commands.

4. Project Tree: using the Project Tree features gives you access to all components and project data. You can perform the following tasks in the Project Tree:
   - add new components
   - edit existing components
   - scan and modify the properties of existing components

5. Changeover switches: they allow the user to switch among the three working areas of the Hardware and network editor: Topology view, Network view and Device view. See point 7 for more information.

6. Details view: it shows certain content of the selected object in the Overview Window or in the Project Tree. This might include text lists or tags. The content of the folders is not shown, however. To display the content of the folders, use the Project Tree or the Inspector Window.

7. Graphic Area of the Hardware and network editor. The Hardware and network editor opens when you double-click on the Devices and Networks entry in the Project Tree. The Hardware and network editor is the integrated development environment for configuring, networking and assigning parameters to devices and modules. It provides maximum support for the realization of the automation project. This pane is the graphic area where the current configuration of the installed devices with information on the topology and the network can be found. The Hardware and network editor provides you with three views of your project. You can switch between these three views at any time depending on whether you want to produce and edit individual devices and modules, entire networks and device configurations or the topological structure of your project. See the Changeover switches, point 5: Device view for parametrization and configuration of the individual devices, it allows to configure and assign both device and module parameters, see "Device view" on page 17; Network view for graphical connections between devices, it allows to configure and assign device parameters and to network the devices with one another, see "Network view" on page 17; and Topology view for current interconnection of Profinet devices, it allows to display and configure the Ethernet topology as well as to identify and minimize differences between the desired and actual topology, see "Topology view" on page 18. In the Figure above the SIEMENS PLC CPU 1512SP-1 PN is the Master device and is connected to the encoder, i.e. the Slave device, through the PLC_2.PROFINET IO-... connection.

8. Overview Navigation, it allows to quickly scroll through the objects available in the Work Area by pressing the left button of the mouse.

9. Inspector window: additional information on an object selected or on actions executed are displayed in the Inspector window, the available properties and parameters shown for the object selected can be edited in the Inspector window using the Properties tab.

10. It allows to enter the Portal view. The Portal view provides you with a task-oriented view of the tools.

11. Editor bar: it displays the open editors. If you have opened a lot of editors, they are shown grouped together. You can use the Editor bar to change quickly between the open elements.

12. Status bar with progress display. In the status bar, you will find the progress display for processes that are currently running in the background. This also includes

a progress bar that shows the progress graphically. Hover the mouse pointer over the progress bar to display a tooltip providing additional information on the active background process. You can cancel the background processes by clicking the button next to the progress bar. If no background processes are currently running, the status bar displays the last generated alarm.

13. Table Area of the Hardware and network editor: it offers a general overview of the characteristics of the Device (when Device view is selected), of the Network (when Network view is selected) and of the Topology (when Topology view is selected).

14. Task Cards: depending on the edited or selected object, task cards are available, they allow you to perform additional actions. These actions include:
    - selecting objects from a library or from the hardware catalog
    - searching for and replacing objects in the project
    - dragging predefined objects to the work area

    The task cards available can be found in a bar on the right-hand side of the screen. You can collapse and reopen them at any time. Which task cards are available depends on the products installed. More complex task cards are divided into panes that you can also collapse and reopen.
    The Hardware catalog can be selected in the Task Cards; it allows to install the available components just dragging and dropping them onto the Work Area. Customarily the field devices that have been integrated into the TIA Portal via GSDML files are listed under Other field devices > Profinet IO.

Device view

Press the Device view changeover switch in the Hardware and network editor to enter the Device view.

The configuration of devices and assigning of addresses etc. is performed in the Device view. All devices are represented in a photo-realistic way.

- Buffering of configured hardware modules and reuse with module clipboard
- When zoomed to at least 200%, I/Os are displayed with the symbolic names / addresses
- Automatic readout of available hardware with hardware detect
- Full text search in the Hardware catalogue
- Option of filtering the Hardware catalogue to show modules that can currently be used
- All parameters and configuration data are displayed on a hierarchical and context-sensitive basis

Network view

Press the Network view changeover switch in the Hardware and network editor to enter the Network view.

The Network view enables the configuration of plant communication. The communication links between individual stations are displayed here graphically and very clearly.

- Combined view of all network resources and network components
- Fully graphical configuration of the individual stations
- Resources are networked by linking communication interfaces using drag & drop
- Multiple controllers, peripherals, HMI devices, SCADA stations, PC stations and drives possible in a single project
- Procedure for integrating AS-i devices identical to PROFIBUS/PROFINET

- Zoom and page navigation
- Copying/pasting entire stations, incl. configuration, or individual hardware modules

A subnet (PLC_2.PROFINET IO) is added to the operator panel. Click the subnet (PLC_2.PROFINET IO) to apply the network settings. Specify the required network settings under Properties > Network Settings in the Properties area (see point 9 under Project overview, starting on page 15). Make sure that you use the same settings throughout the entire network.

Topology view

Press the Topology view changeover switch in the Hardware and network editor to enter the Topology view.

Decentralised peripherals on Profinet are configured in the Network view. The controllers and the decentralised peripherals assigned to them can be shown graphically. During ongoing operation, however, it is not possible to see which ports are actually connected and communicating with each other.

Yet this is precisely what is often important for diagnostics. For Profinet networks, the Topology view enables this information to be displayed quickly and easily. An offline/online comparison identifies the communicating ports. By detecting, presenting and monitoring the physical connections between devices on Profinet, the administrator can easily monitor and maintain even complex networks.

NETWORK AND COMMUNICATION SETTINGS

The MAC address of the device is reported in the label applied to the device enclosure. See the following section.

The IP address and the subnet mask as well as the Profinet device name must be assigned by the user to each interface of the unit to be connected in the network. By default, before delivery the device name of the encoder is set to a blank string and its IP address is set to 0.0.0.0. See "Device name and IP address at delivery" on page 25.

MAC ADDRESS

The MAC address is an identifier unique worldwide.

The MAC-ID consists of two parts: the first 3 bytes are the manufacturer ID and are provided by IEE standard authority; the last three bytes represent a consecutive number of the manufacturer.

NOTE

The MAC address is always printed on the encoder label for commissioning purposes.

The MAC address has the following structure:

Bit value 47 ... 24			Bit value 23 ... 0		
X	X	X	X	X	X
Company code (OUI)			Consecutive number		

INSTALLING THE ENCODER UNDER TIA PORTAL ENVIRONMENT

Description of the GSDML file

The functionality of a PROFINET IO device is always described in a GSDML file. This file contains all data that are relevant for engineering as well as for data exchange with the IO device.

PROFINET IO devices can be described using XML-based GSD. The description language of the GSD file, i.e. GSDML (General Station Description Markup Language) is based on international standards. As the name suggests, the GSD file is a language-independent XML file (Extensible Markup Language).

Profinet encoders from Datalogic are supplied with their own GSDML file GSDML-V2.35-Datalogic-019C-AMT58-PT-V1-XXXXXXXX.XML where XXXXXXXX is the release date of the file in a 8-digit format encompassing information about year (4 digits), month (2 digits) and day (2 digits). Go to www.datalogic.com to get the GSDML file.

The XML file has to be installed in the Profinet Controller.

Version structure of GSDML files

The GSDML file structure is in compliance with the ISO 15745 “Open Systems Application Integration Framework” and is oriented on the defined profile of a field device via the following model:

GSDML-	V2.35-	DATALOGIC-019C	AMT58-PT-V1	20210608	.xml
GSD data identification	Version of GSDML scheme	Manufacturer	Name of device	Version number, format: yyymmdd	File extension

- The version of the GSDML model used defines which scope of language a GSD file uses.
- The version date is updated, if, for example, an error is cleared or a function extended.

NOTE

Please always comply with the specifications indicated in the following table:

GSDML file version	Encoder HW version	Encoder SW version	User’s guide version
From release 20210608 to ...	5.2	1.0	821007850 Rev.A

Installing the GSDML file

In the menu bar of the main window, press Options and then Manage general station description files (GSD) command.

Figure 1. Installing the GSDML file

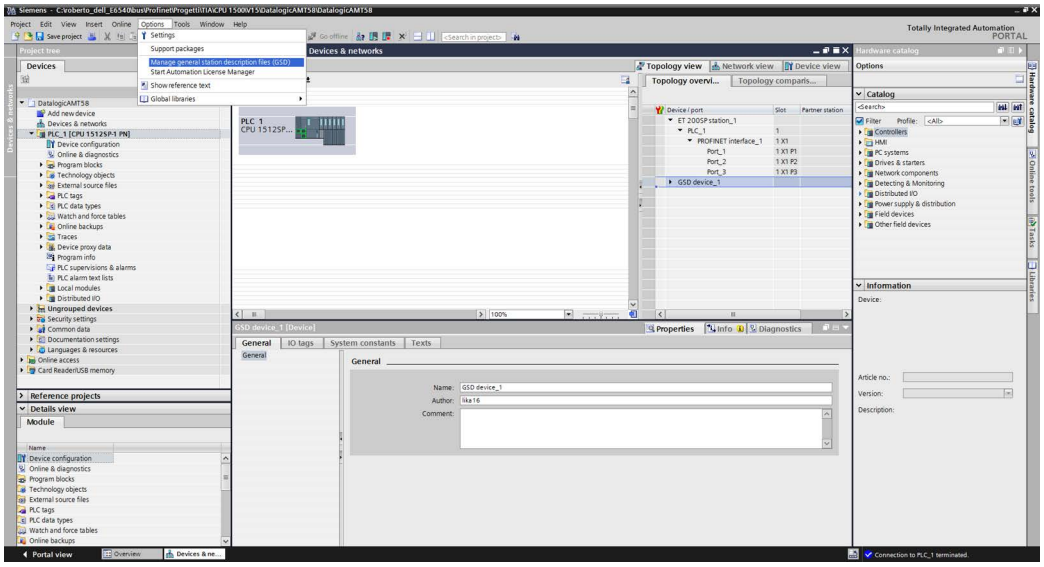

The Manage general station description files dialog box will appear. Press the Source path button to choose the folder where the GSDML file is located. Please make sure that the bitmap file representing the encoder is located in the same folder as the GSDML file. Select the GSDML file specific to the device you need to install and press the Install button to install it.

Figure 2. Selecting the GSDML file

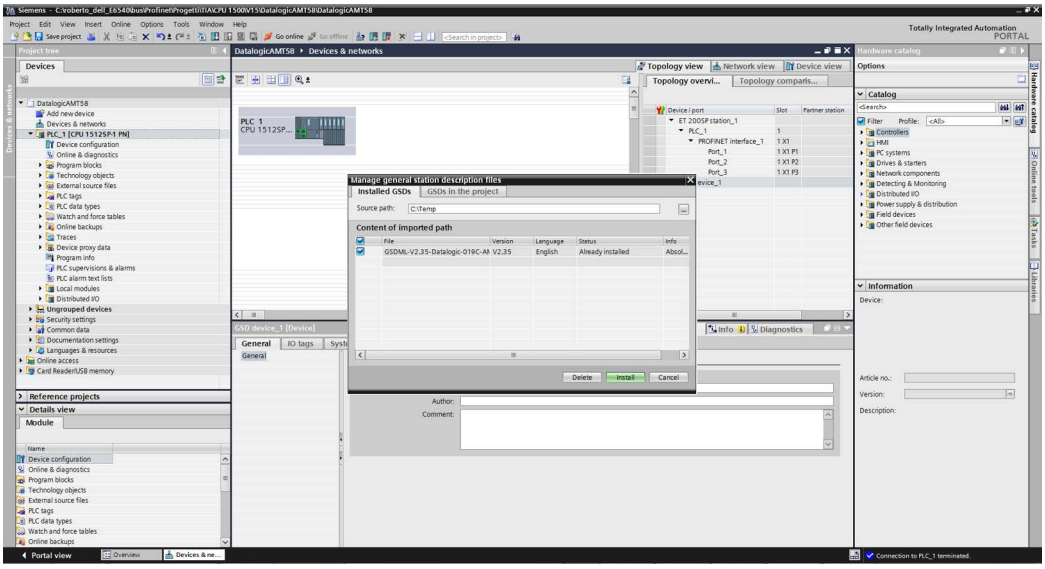

Now scroll through the directory tree in the Hardware Catalog pane of the main window (task cards) and select the path Catalog \ Other Field devices \ PROFINET IO \ Encoders \ Datalogic: the product family can be found inside the folder.

Figure 3. Scrolling through the Profinet families and categories

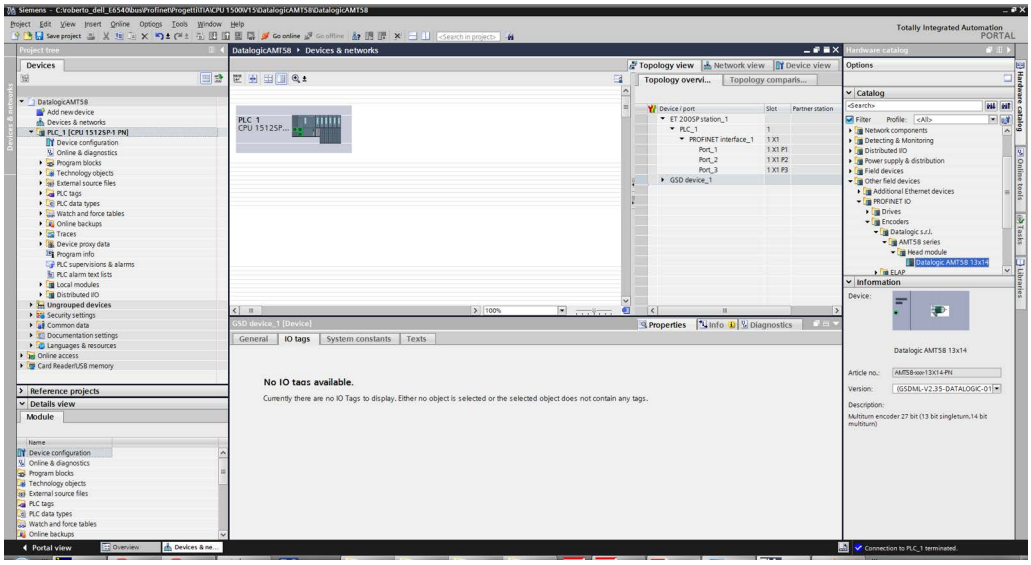

Adding a node to the project

Now we need to install the module of the desired model.

In the right pane open the Hardware catalog task card to display the field devices integrated into TIA Portal via the Profinet file (GSDML file); select the Datalogic product family directory; drag the required module to the Network view and drop it next to the PLC module. Then assign the module to the network.

Figure 4. Adding a node to the project

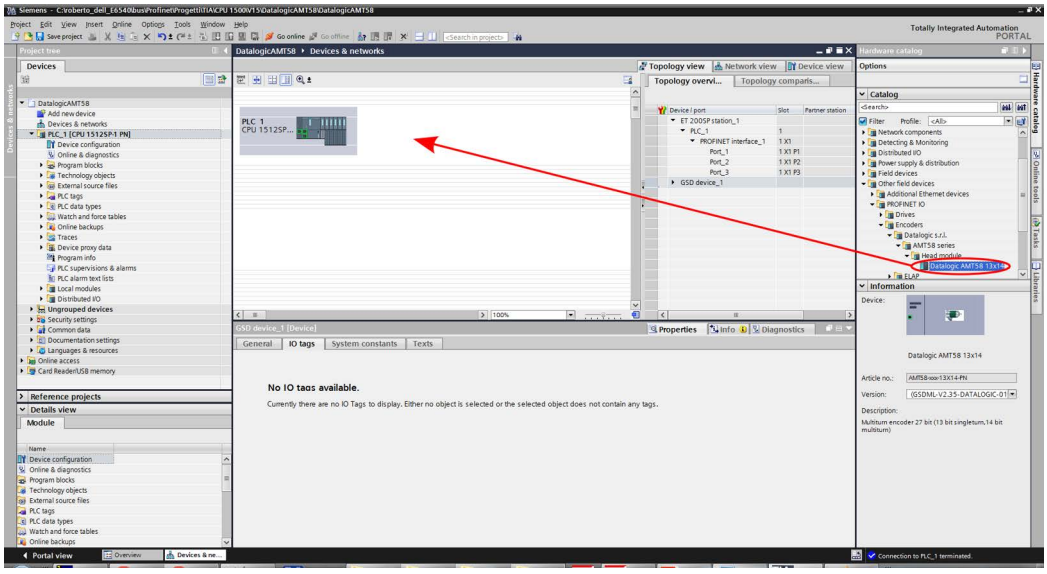

Establishing the bus connection

As soon as the device has been inserted into the project, the bus connection with the PLC can be established in the Network view.

The “Not assigned” information message appears in the picture of the node: it warns that the connection between the PLC and the Slave device is not established yet. Right-click on the message and select, through the Select IO controller drop-down box, the PLC the node has to be connected to. When doing so, make sure that you are in the Network function mode in the Network view.

After configuring the networking, the device is connected to the PLC via the Profinet network.

Figure 5. Establishing the bus connection

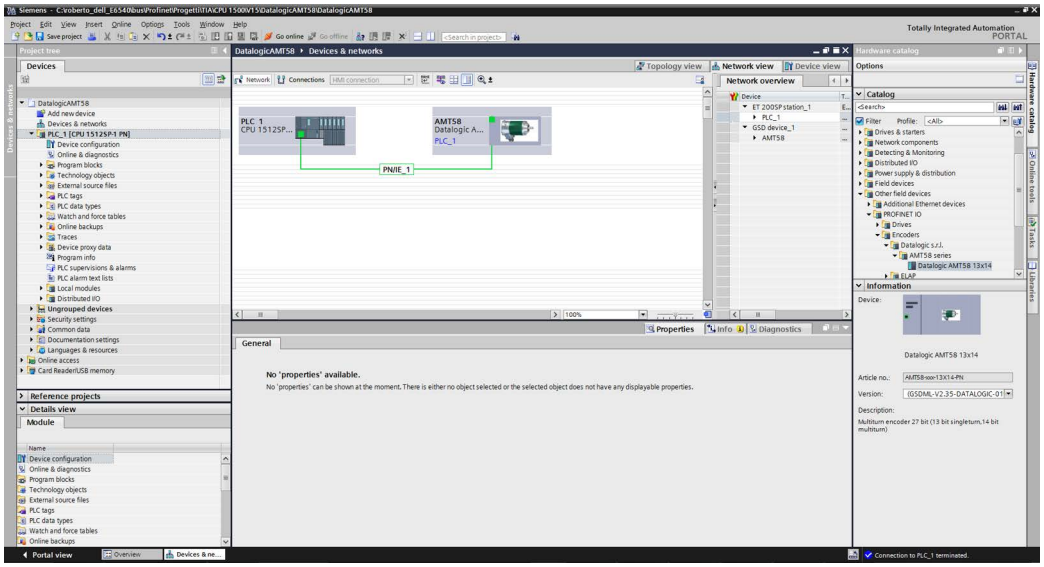

Inserting the telegrams

You are not required to insert the telegrams, as they are installed automatically.

Press the Device view changeover switch to enter the Device overview working area and display the installed telegrams. Two types of telegrams with different characteristics are available: Standard Telegram 81 and Telegram 860. For detailed information on the Telegrams refer to Telegrams, starting on page 48.

Figure 6. Telegrams and module parameters

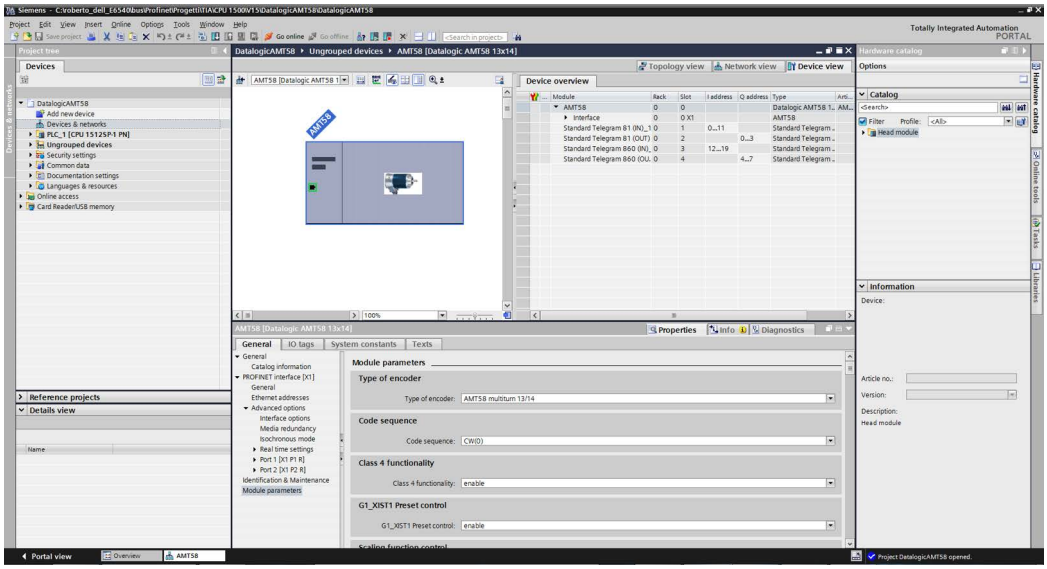

Module parameters

Press the Device view changeover switch in the Hardware and network editor to enter the Device view working area, then select the device you need to configure in the drop-down box on the top left of the graphic area. Select the Module Access Point field in Device view. In the Properties inspector window, General tab, press the Module parameters menu option to see and set the encoder's parameters if required.

The parameters listed in this page are sent at each switching on.

You can change the value of each parameter in the edit field. The new value will be transmitted to the Device at switching on.

You can change the value of the module parameters also while the device is operational in the Cyclic Data Exchange mode via the Watch table. Please note that the value however will be overwritten at switching on by the value set in the Module parameters tabbed page.

For a comprehensive description of the parameters and how to set them properly refer to the specific explanation under Encoder Parameters, starting on page 62.

Figure 7. Module parameters

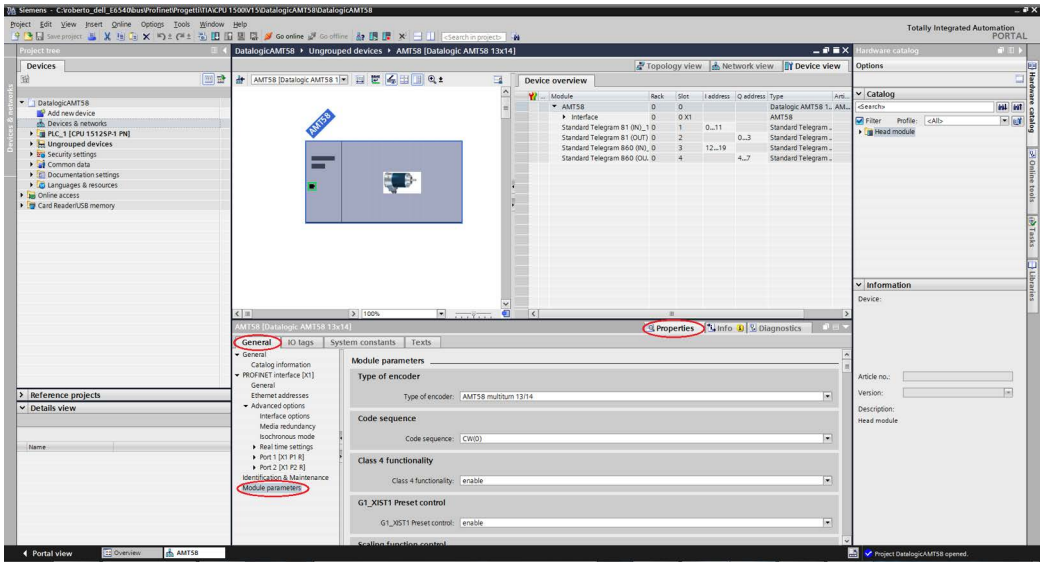

Device name and IP address at delivery

In a Profinet network it is mandatory that each IO device is provided with its own Device name and IP address. By default, before delivery the device name of the encoder is set to a blank string and its IP address is set to 0.0.0.0.

Before the PROFINET IO controller can address a PROFINET IO device, a name has to be assigned to the PROFINET IO device. PROFINET uses this method because names are easier to use and recall than complex IP addresses. Devices on an Ethernet subnet must have unique names.

NOTE

An IO Device does not have a device name when delivered. By default, the device name of Datalogic Profinet encoders is set to a blank string.

The device names must satisfy DNS (Domain Name System) conventions:

- Names are limited to a total of 127 characters (letters, numbers, dashes or dots).
- Any component part (that is, a character string between two dots) of the device name may only be up to 63 characters long.
- Names cannot contain any special character such as umlauts, parentheses, underscores, forward or backward slashes, empty spaces, etc. The dash is the only special character allowed.
- Names must neither start nor end with the minus “-” sign.

Setting the device name and the IP address

As stated, to completely establish the connection, you have to assign the IP address and the Profinet device name to the Slave device. To do so, enter the Device view working area, select the device you need to configure in the drop-down box on the top left of the graphic area, right-click on the image of the module and select the Properties command from the shortcut menu (or the Assign device name command as an alternative).

Figure 8. Setting the device name and IP address

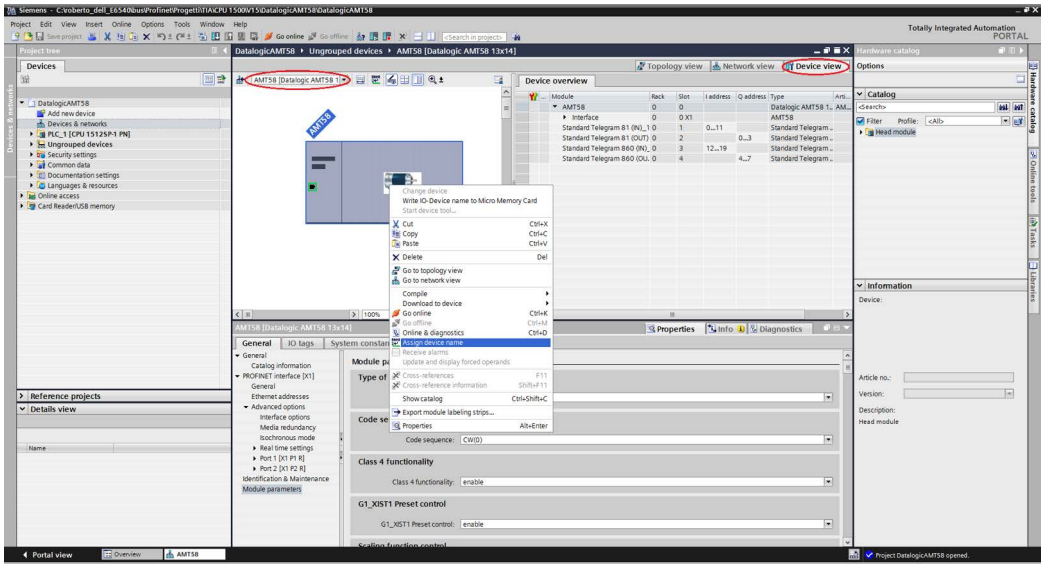

In the Properties inspector window, General tab, you can now use the Ethernet addresses menu option to set the Ethernet address (IP address, subnet mask, ...) and assign the Profinet name of the Device.

Figure 9. Setting the device name and IP address

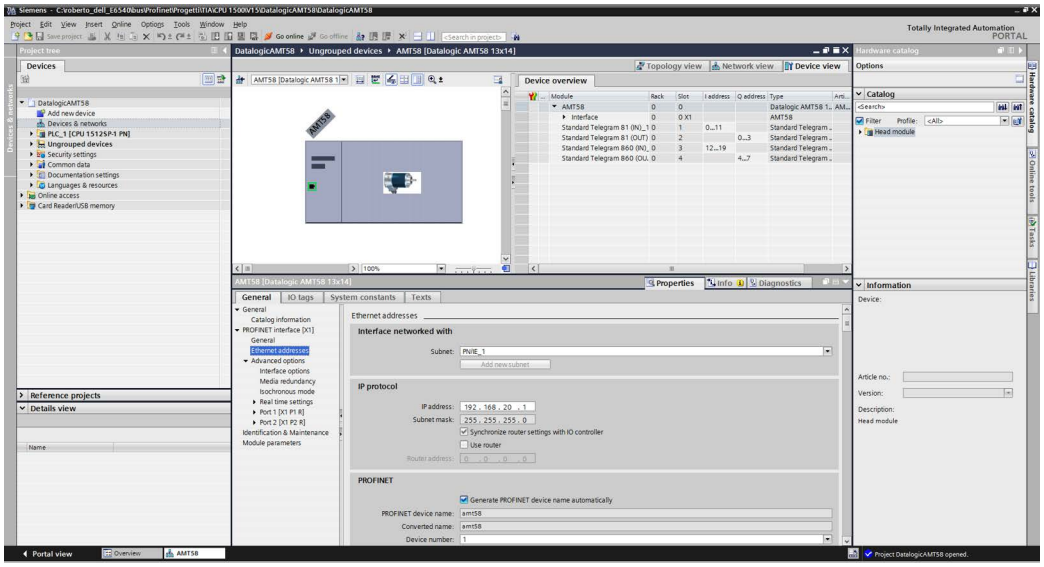

Steps for system start-up

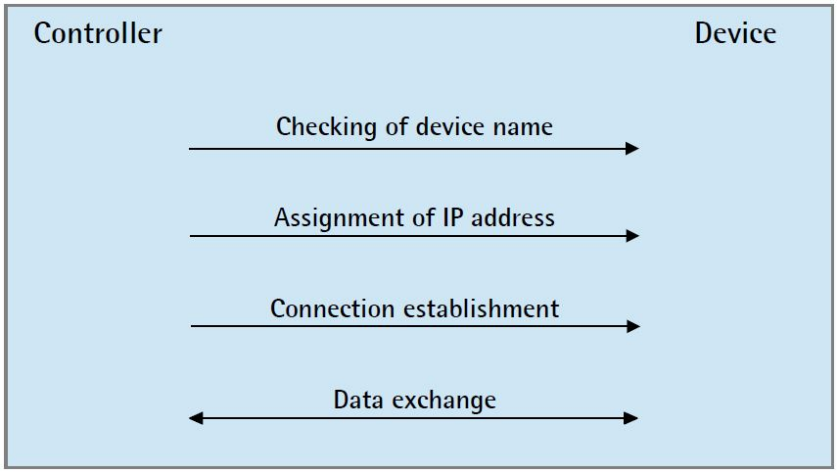

Start-up response

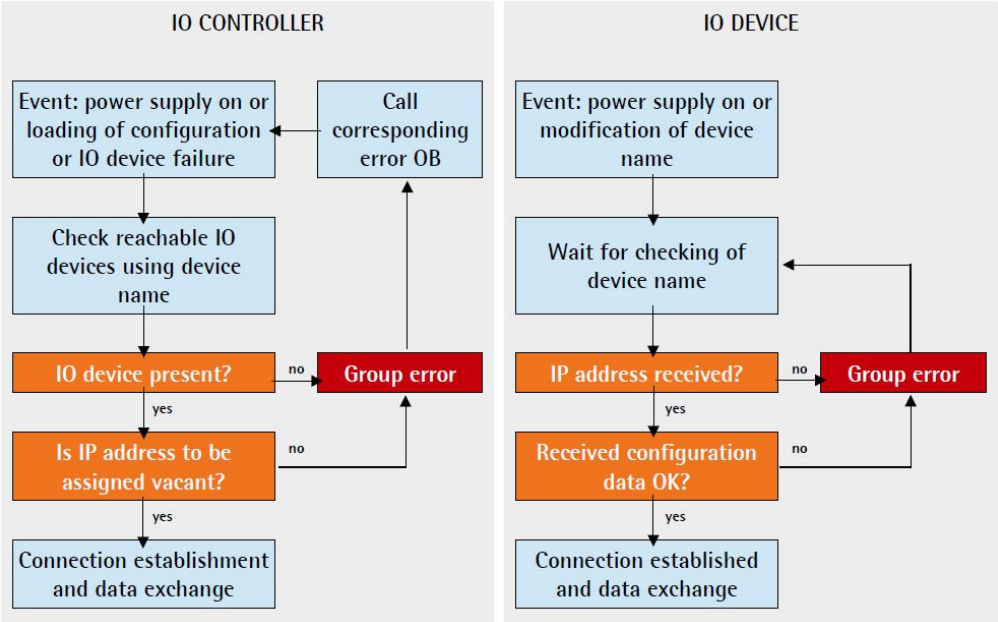

Compiling and transferring the project

After setting you must compile and then transfer the project to the device.

Establishing an online connection (Online mode)

Figure 10. Establishing an online connection

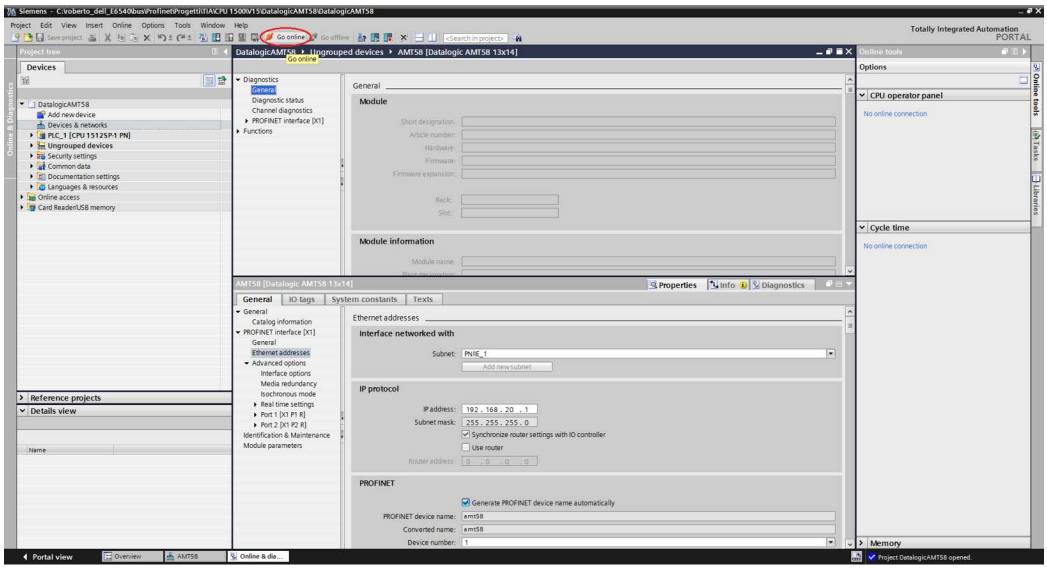

In online mode, there is an online connection between the PLC and one or more devices. An online connection between the PLC and the device is required, for example, for the following tasks:

- Using the Control Table
- Testing user programs
- Displaying and changing the operating mode of the device
- Displaying module information
- Comparing blocks
- Hardware diagnostics

Before you can establish an online connection, the PLC and the device must be physically or remotely connected.

After establishing a connection, you can use the Online and Diagnostics view or the Online tools task card to access the data on the device. The current online status of a device is indicated by an icon to the right of the device in the Project Tree.

To establish an online connection between the PLC (Profinet Controller) and the device (Profinet Device) proceed as follows.

- In the Project Tree (see point 4 under "Project overview" on page 15) mark the folder of the PLC that is configured as the Controller.
- Select the Go online command in the Online menu bar to establish an online connection to the PLC (Controller) and to the device (Device).
- If the device has already been connected online, the online connection is automatically established using the previously specified connection path.
- If there was no previous connection, the Go online dialog opens.
- Select the connection path:
  - select the type of interface;
  - select the interface of the PLC;
  - select the interface or the subnet for the connection.
- Click the START SEARCH button. Devices which can be reached by the set connection path are displayed in the Compatible devices in target subnet. The connection line in the graphic is displayed as solid.

- Select the device in the Compatible devices in target subnet table and confirm the selection with Go online. The online connection to the selected target device is established.

Figure 11. Online connection established

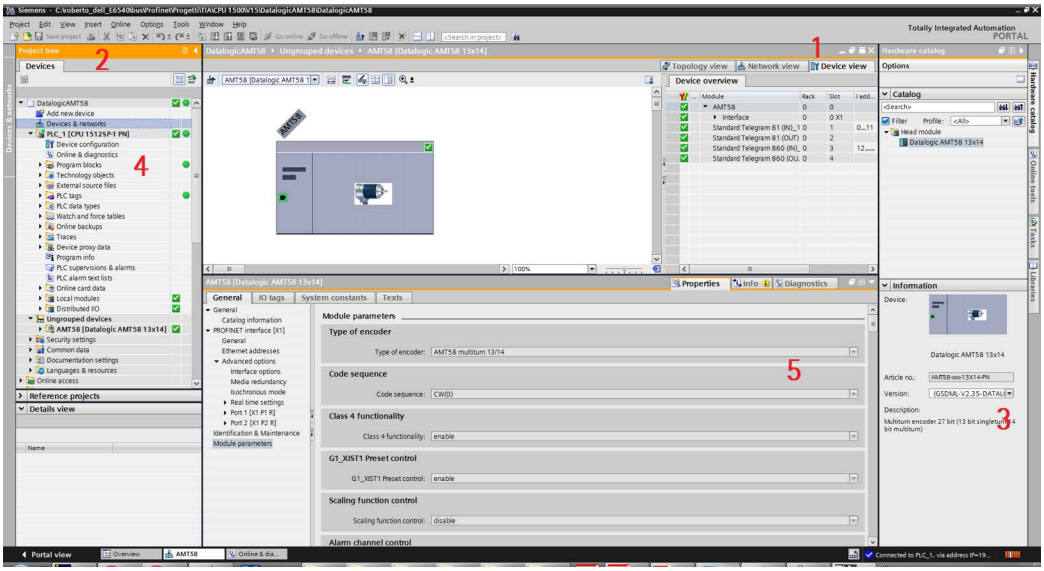

After the online connection has been established successfully, the user interface changes (see the Figure above).

1. The title bar of the active window gets an orange background as soon as at least one of the devices currently displayed in the editor has been successfully connected online. If one or more devices are unavailable, a symbol for a broken connection appears in the title bar of the editor.

2. Now the title bars of inactive windows for the relevant station have an orange line below them.

3. An orange, pulsing bar appears at the right-hand edge of the status bar. If the connection has been established but it is not working properly, an icon for an interrupted connection is displayed instead of the bar. You will find more information on the error in Diagnostics in the Inspector window.

4. Operating mode symbols or diagnostics symbols for the stations connected online and their underlying objects are shown in the Project Tree. A comparison of the online and offline status is also made automatically. Differences between online and offline objects are also displayed in the form of symbols.

5. The Diagnostics > Device information area is brought to the foreground in the Inspector window.

Closing an online connection

To close the existing online connection, follow these steps.

1. Select the device for which you want to disconnect the online connection in the Project Tree.

2. Select the Go offline command in the Online menu bar. The online connection is disconnected.

Diagnostics

Configuration of the diagnostics is integrated in the system in a user-friendly way and activated with just one click. When new hardware components are introduced, the diagnostic information is updated automatically via the engineering system (HWCN). System diagnostics outputs all relevant information on existing errors in the system. This information is packaged automatically in messages containing the following elements:

- Module
- Message text
- Message status

To access the diagnostics function please proceed as follows.

1. Right-click on the module to process.
2. Select the Online & diagnostics command from the shortcut menu.
3. If there is no online connection established, click the Connect online button in the Diagnostics entry.
4. The diagnostic status of the module will be displayed in the Diagnostic status group in the Diagnostics folder in the Online and diagnostics view of the module to be diagnosed.

The following status information is displayed in the Diagnostic status area:

- Status of the module as viewed by the CPU, for example:
  - Module available and OK.
  - Module defective.
  - If the module experiences a fault and you have enabled the diagnostic error interrupt during configuration, the “Module defective” status is displayed.
  - Module configured, but not available.
    Example: Diagnostics data is not available because the current online configuration differs from the offline configuration.
- Detected differences between the configured and the inserted module. Provided it can be ascertained, the article number will be displayed for the set and actual type.

The scope of the displayed information depends on the selected module.

RESETTING THE PARAMETERS TO THE DEFAULT FACTORY VALUES

Default values are provided to each parameter of the device. The first time you install the encoder, it will operate using the default values. They allow the operator to run the IO device for standard and safe operation. They are plainly not optimized for specific application yet they provide maximum performance for most systems. To suit the specific application requirements it may be advisable and even necessary to enter new parameters instead of the factory default settings.

There could be exceptional circumstances where it would be necessary for you to restore the default values of the settable parameters. When this is the case, you have to use the Reset command.

NOTE

When you restore the default values, please always consider that:

- **the encoder parameters will be restored to the default values;**
- **the encoder offset will be reset;**
- **the Device Name will be lost and replaced with a blank string;**
- **the IP address will be set to 0.0.0.0;**
- **the parameters associated with the IP range will be set to 0.**

CAUTION

The execution of this command causes all the values which have been set previously next to each parameter to be overwritten!

NOTE

The complete list of machine data and relevant default parameters is available under "Encoder Parameters" on page 62**.**

When you need to restore the default values proceed as follows.

Enter the Device view working area, select the device you need to configure in the drop-down box on the top left of the graphic area, right-click on the image of the module and select the Online & diagnostics command from the shortcut menu (or double-click the Online & diagnostics command in the project tree). Confirm your request in the dialog box that appears.

Figure 12. Restoring default values

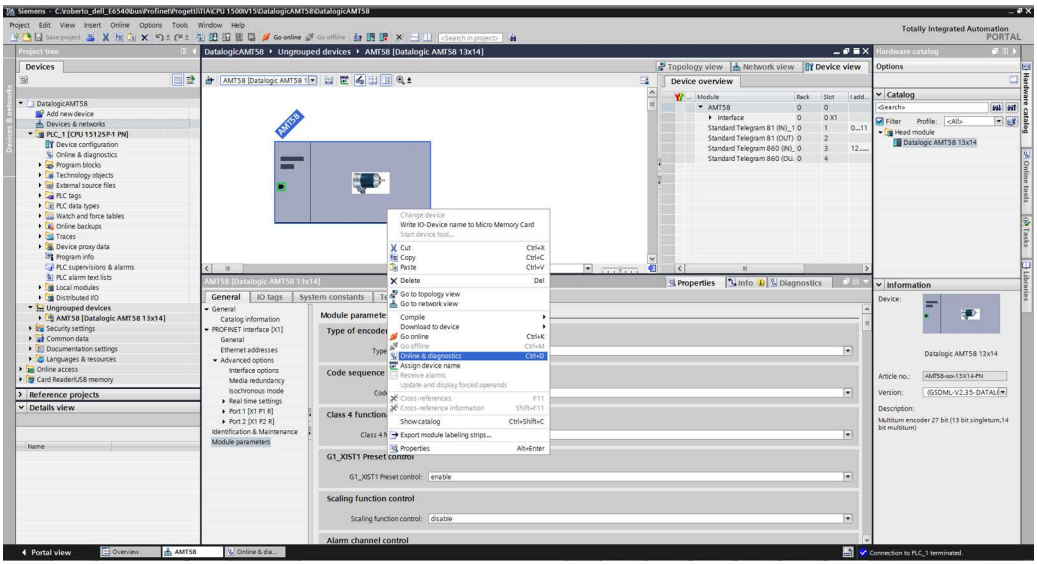

To get started with the diagnostic functions you must go online. To do this you must press the Go online command in the Online menu bar (see also "Establishing an online connection (Online mode)" on page 28).

Figure 13. Going online

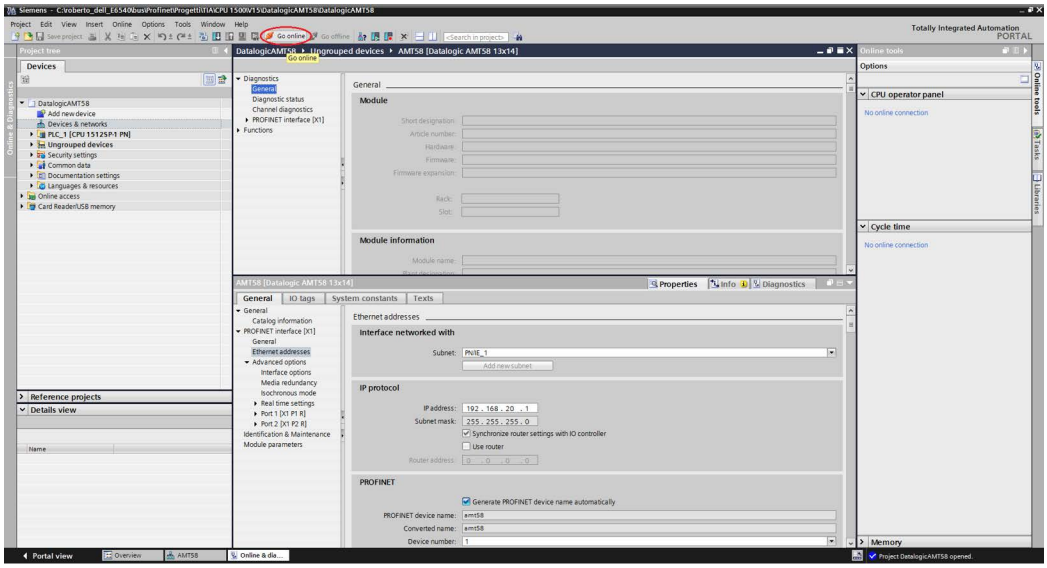

The Diagnostics working area window contains information about the encoder, statuses, events, etc.

Under Functions press Reset to factory settings.

Figure 14. Reset to factory settings

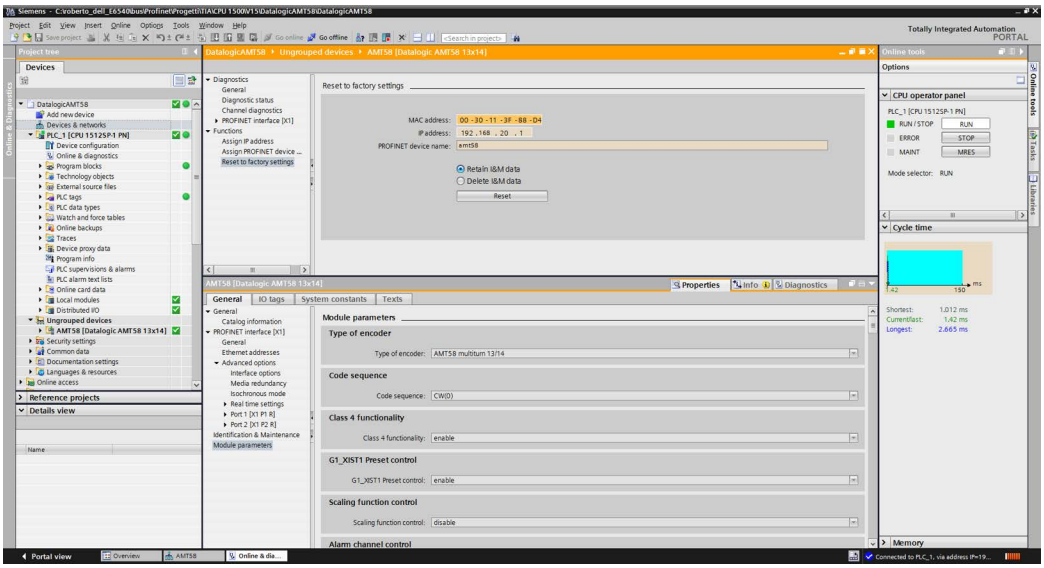

Enter the MAC address of the encoder you need to reset (it is written on the encoder label) and then press the Reset button to confirm.

When the operation is carried out, you will find the value 0.0.0.0 under the IP address item and three dashes under the PROFINET device name item, they are followed by the message “No device name assigned”.

Figure 15. Encoder reset

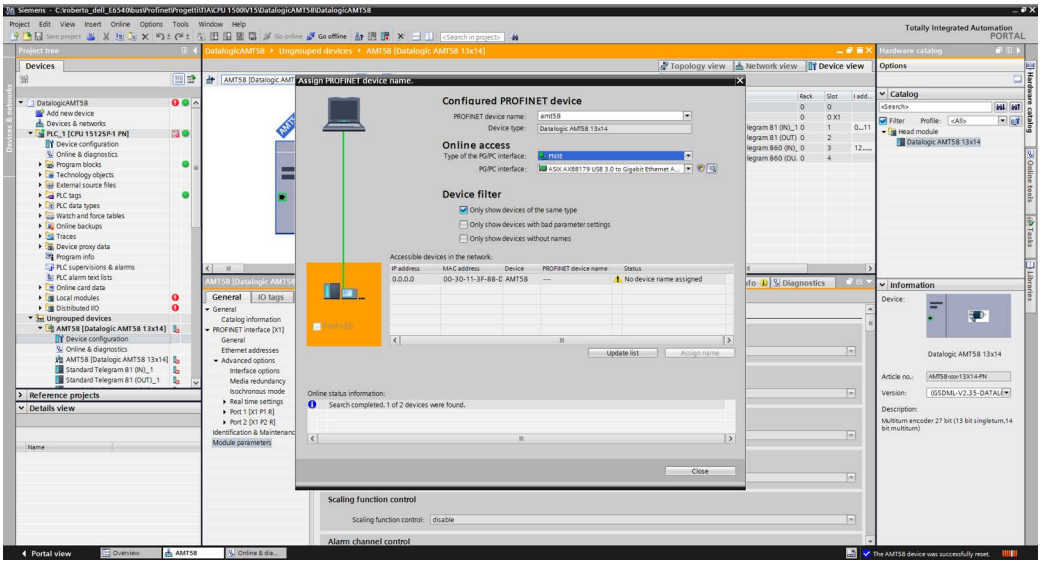

TO TECHNOLOGY OBJECTS

In order to be able to facilitate the use of technological functions that can be used with a SIMATIC controller, what is known as Technology Objects have been introduced in the programming environment of SIMATIC. Within these technology objects, the available functions are encapsulated and provided to the creator of the user program for easy access and the easy use in the programming environment.

In particular these technology objects are used in the “motion control” area to simplify the control and handling of axes and additional motion control functionalities and to support the user in the creation of a user program with motion control functionalities.

NOTE

When the encoder is installed as a TO Technology Object, with IRT Isochronous-Real-Time communication (see "Real-time class 3 (IRT_TOP) (RT3)" on page 72**) the cycle time must be greater than or equal to 2 ms.**

Properties of a technology object (TO)

A technology object (TO) for motion control in the SIMATIC has the following properties:

- The technology object represents a software object in the controller.
- The technology object represents the mechanical components.
- The technology object encapsulates the technological functionality.
- The technology object allows a uniform setting and configuration.
- The technology object ensures a simple connection of the drives and encoders as well as the distributed I/O.
- The technology object encapsulates the mechanical configuration, the monitoring and limitations of the drive and the mechanic that is connected to it.
- The technology object is addressed via PLCopen motion control instructions from the user program.

This guarantees a simple and standardized use of the motion control functionalities in the SIMATIC.

Installing the encoder as a technology object (TO)

First of all, if the encoder has to be used as a TO Technology Object, please set the Compatibility Mode parameter to 0 = Enable = Compatible with Encoder Profile V3.1.

Figure 16. Checking the Compatibility Mode parameter setting

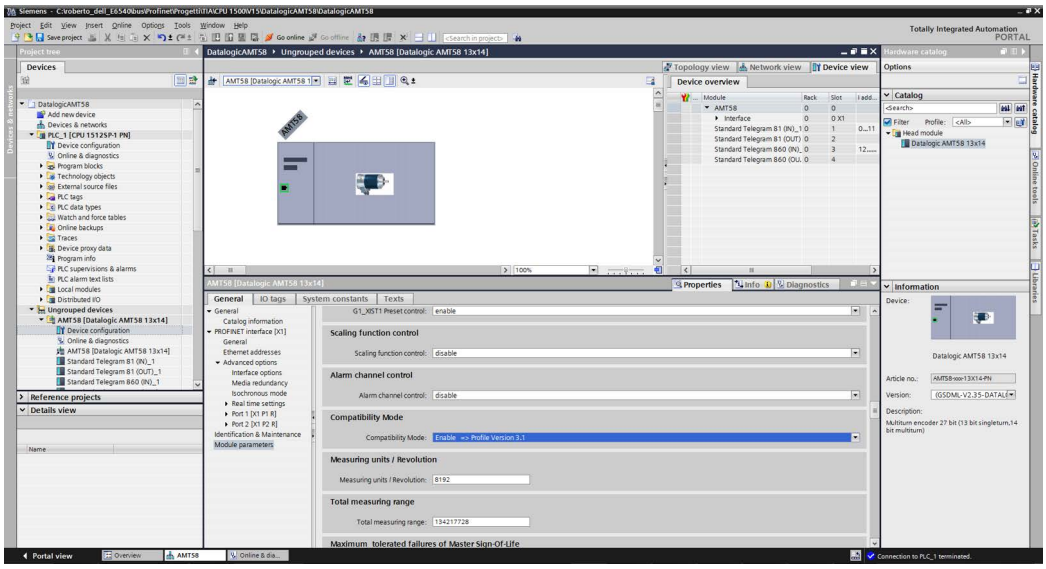

When you need to add a new technology object, click Add new object under the Technology objects item in the project tree: the Add new object dialog box will be displayed.

Figure 17. Adding a new technology object

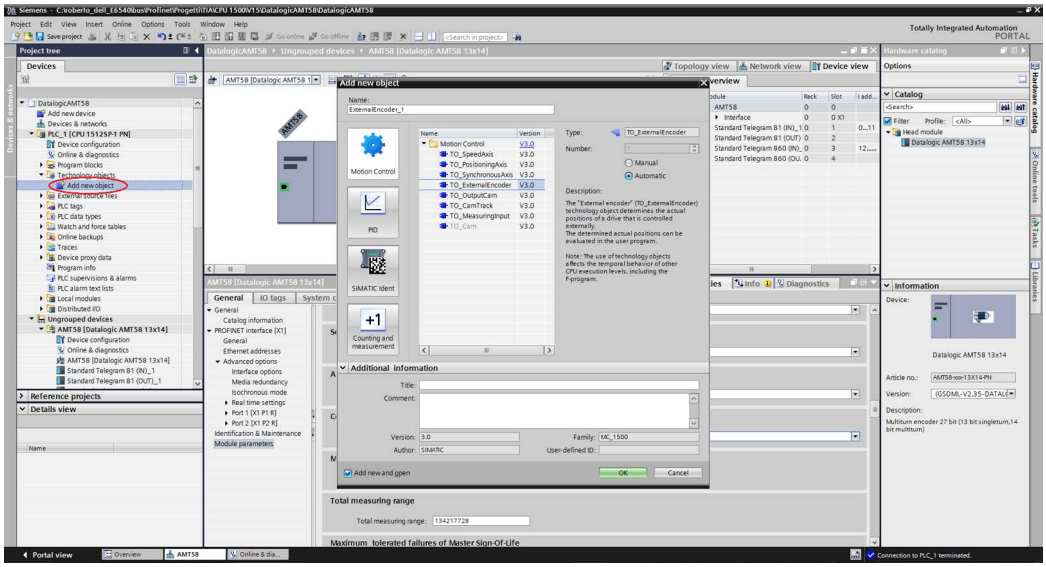

In the Add new object dialog box, select the entry TO_ExternalEncoder under the Motion Control list. Press OK to confirm.

Figure 18. Adding External Encoder technology object

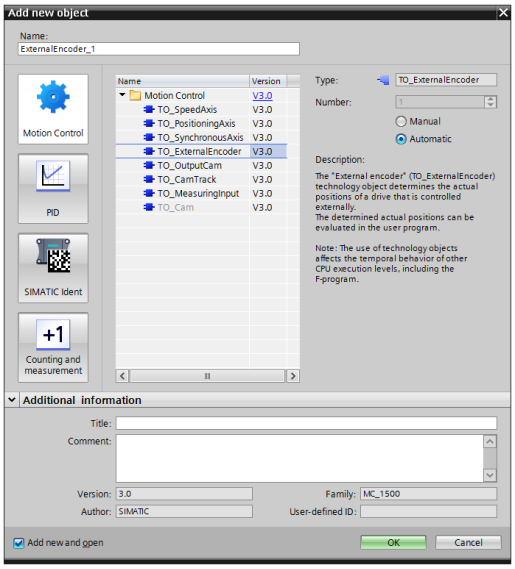

Under Basic parameters in the Function view working area set the available items according to the technical features of the encoder to be connected.

Please note that when a new object is successfully added, the object node is added to the Project tree and the configuration for this newly added device is opened.

Figure 19. Setting the TO basic parameters

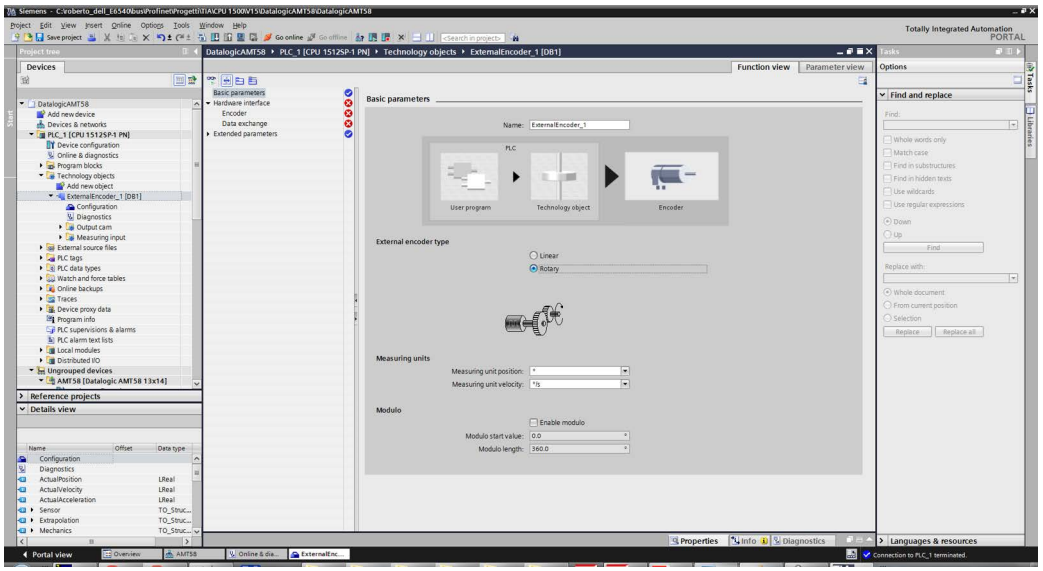

Under Hardware interface set both the Encoder parameters and the Data exchange parameters. Select the telegrams to be used and set the singleturn resolution and the number of revolutions.

Figure 20. Setting the TO hardware interface

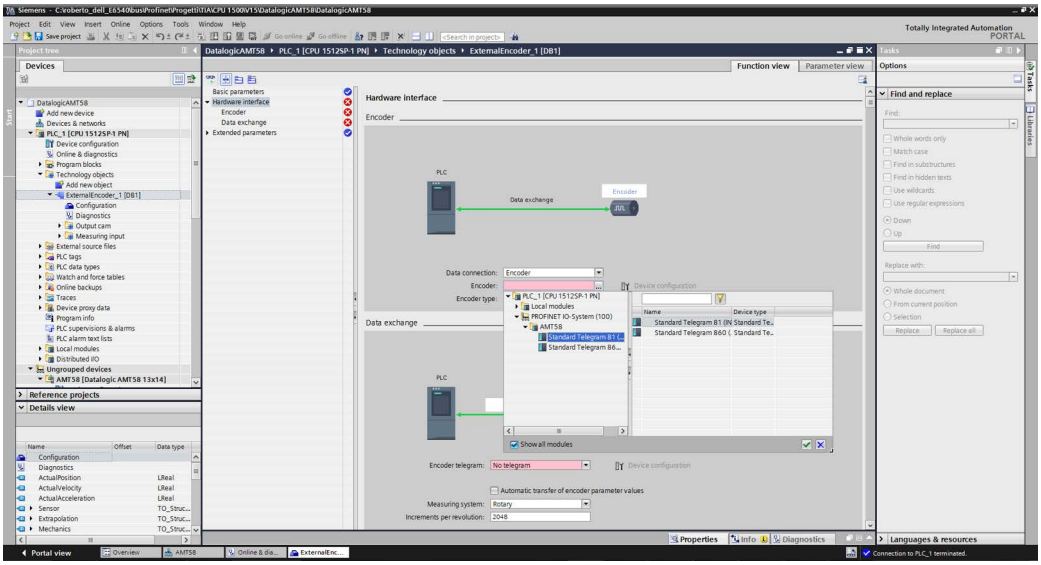

As soon as the parameters are set, some green ticks will appear in the lateral bar to indicate the proper configuration.

Figure 21. TO configured

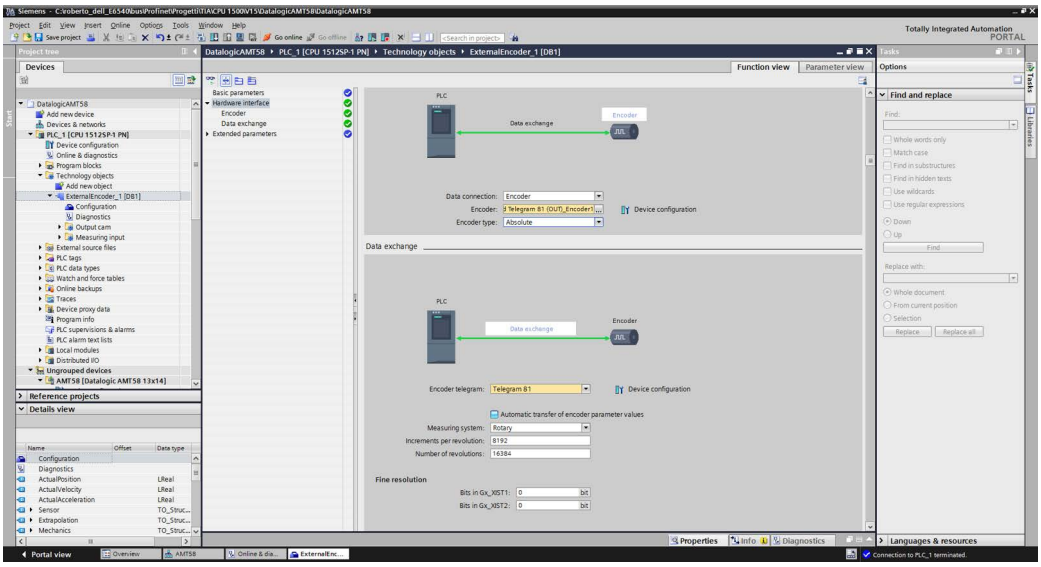

The page will appear as in the following detailed views:

Figure 22. TO encoder pane

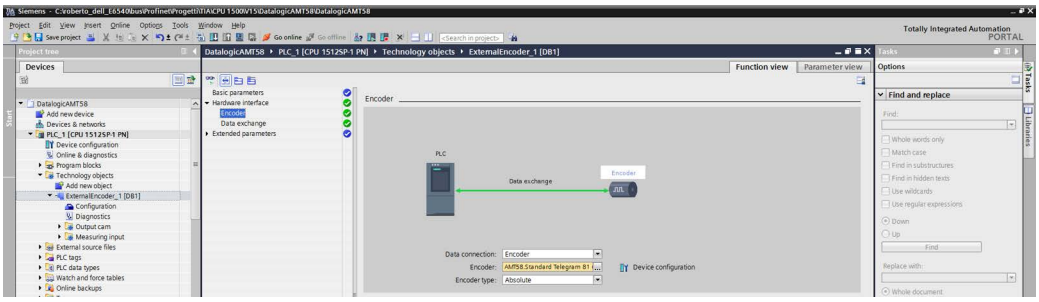

Figure 23. TO data exchange pane

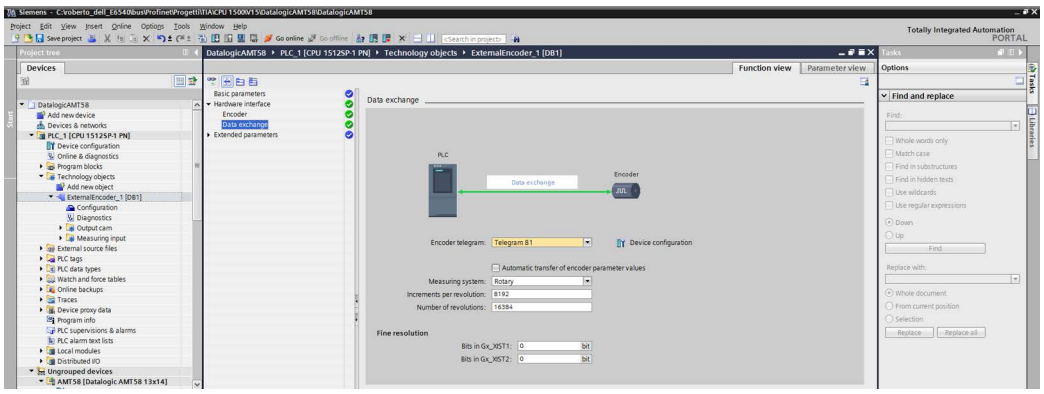

Downloading the project and going online

After the project has been successfully completed, the controller can be selected and the created program downloaded. To do this press the **Download to device** button in the toolbar. After download is carried out, you can go online by pressing the **Go online** button in the toolbar.

Once the online connection to the controller is established, you can enter the diagnostic functions. To do this select the Technology Object and then the Diagnostics item in the Project tree.

The Status and error bits pane will be displayed.

Figure 24. TO status and error bits pane

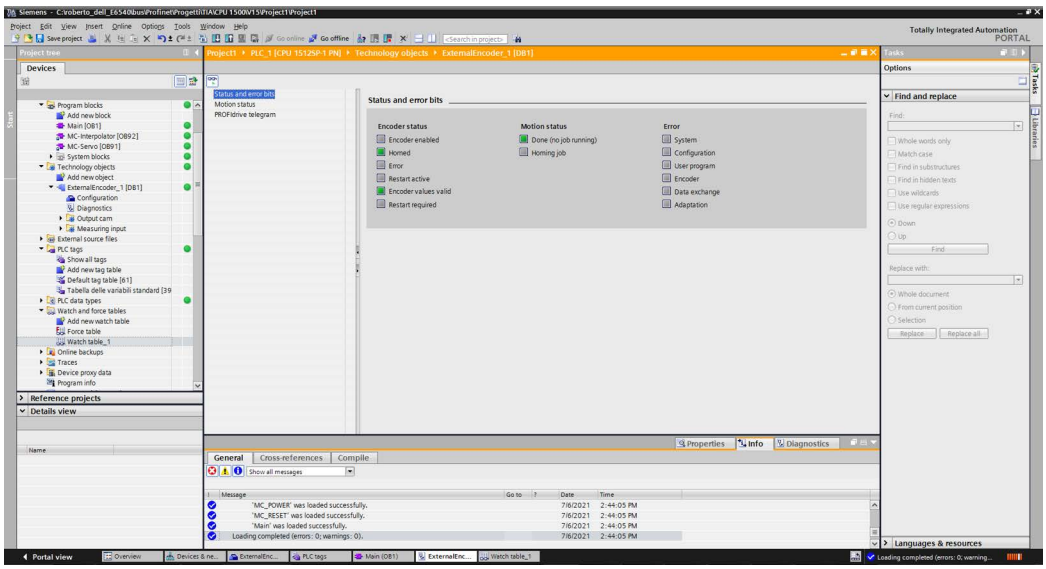

Enabling the encoder

Please note that the encoder is disabled now: it must be enabled.

Figure 25. TO encoder disabled

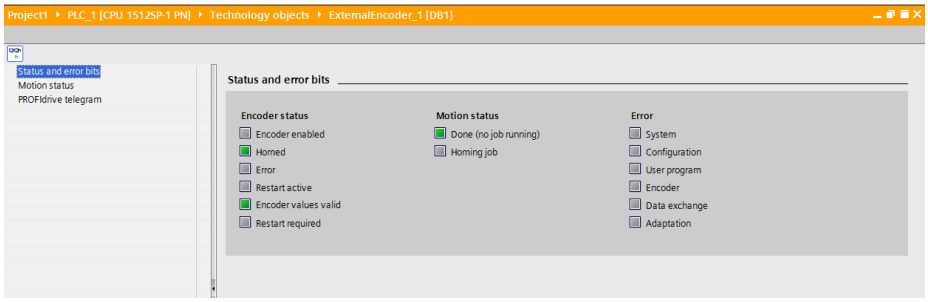

To enable the encoder select the Watch and force tables and then the Telegram 81 item in the Project tree. The Telegram 81 watch table will be displayed.

Figure 26. TO Watch and force tables

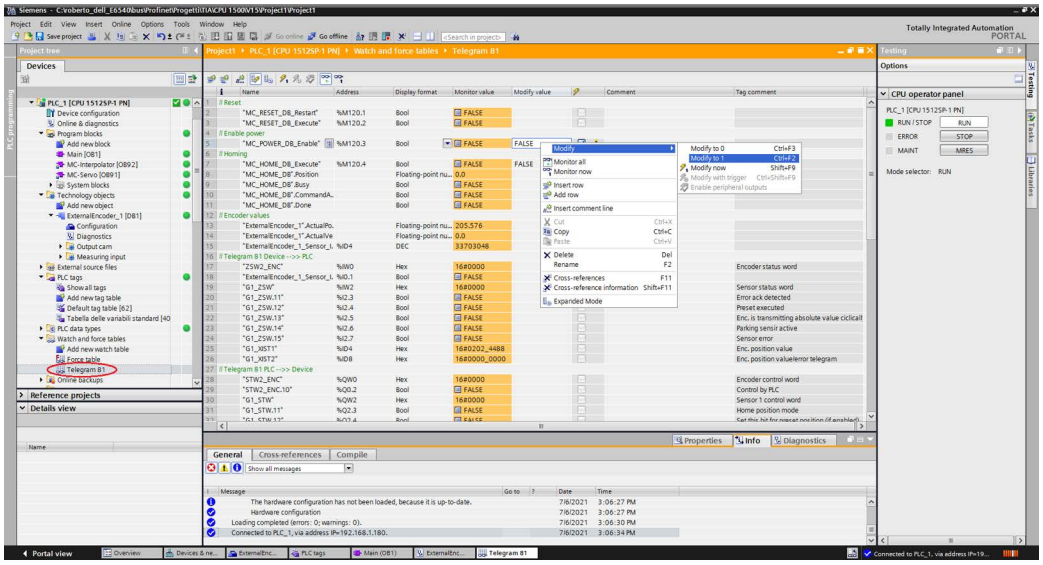

Under the section TO (External Encoder) Status Sensor \ MC_POWER select the MC_POWER_DB_Enable function, right-click on the item in the Monitor value column and then press Modify and Modify to 1 commands in the drop-down box that appears.

Figure 27. TO enabling the encoder

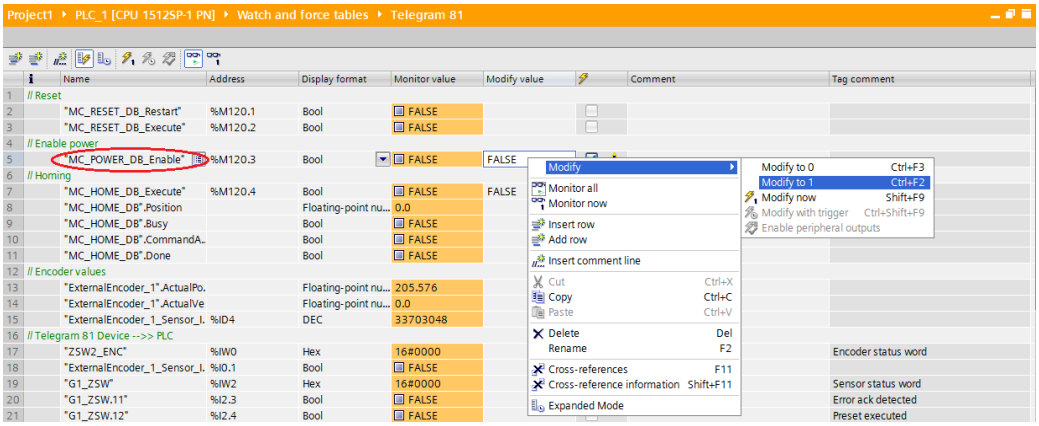

In the Status and error bits pane check that the encoder is enabled now.

Figure 28.TO encoder enabled

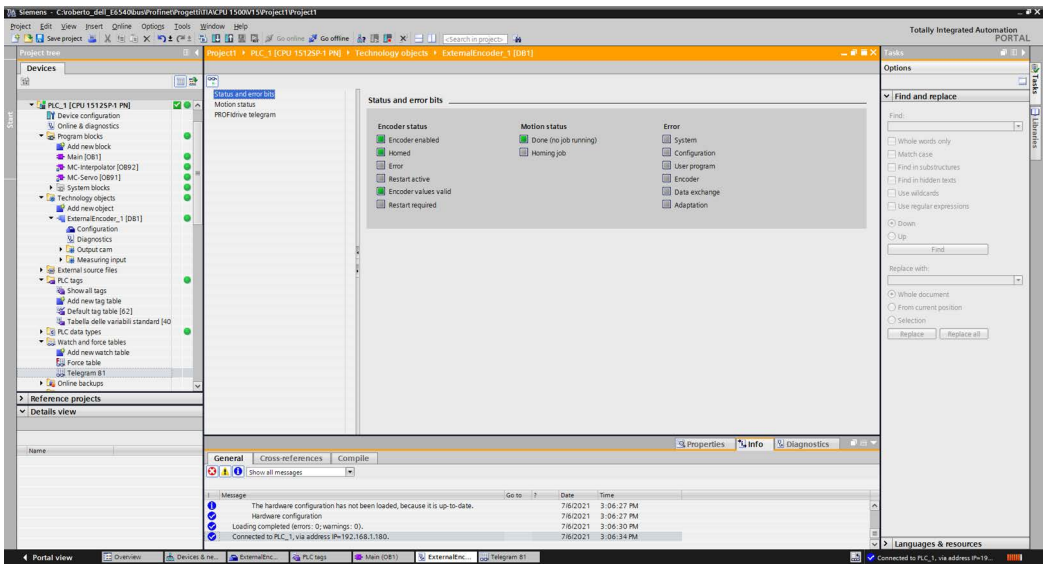

Setting and activating the preset value

NOTE

We suggest activating the preset value when the encoder is in stop.

Preset function is meant to assign a desired value to a known physical position of the system. The chosen physical position will get the value set next to this index and all the previous and following mechanical positions will get a value according to it.

Open the **Watch and force tables** and select the **Telegram 81** item in the Project tree. The Telegram 81 watch table will be displayed.

Please check the current position of the encoder, see the **ExternalEncoder_1.ActualPosition** under the section **TO position and velocity**. It is “2129.853” currently.

To set the preset value select the **MC_HOME_DB.Position** function under the section **TO (External Encoder) Status Sensor \ MC_HOME** and set a desired value in the Monitor value field (for example, “50” in Figure 30). Press **ENTER** to confirm. Then select the **MC_HOME_DB_Execute** function and right-click in the Monitor value column. Then press **Modify** and **Modify to 1** commands in the drop-down box that appears. Finally deactivate back the function by using the commands **Modify** and **Modify to 0**.

Figure 29. TO setting and activating the preset

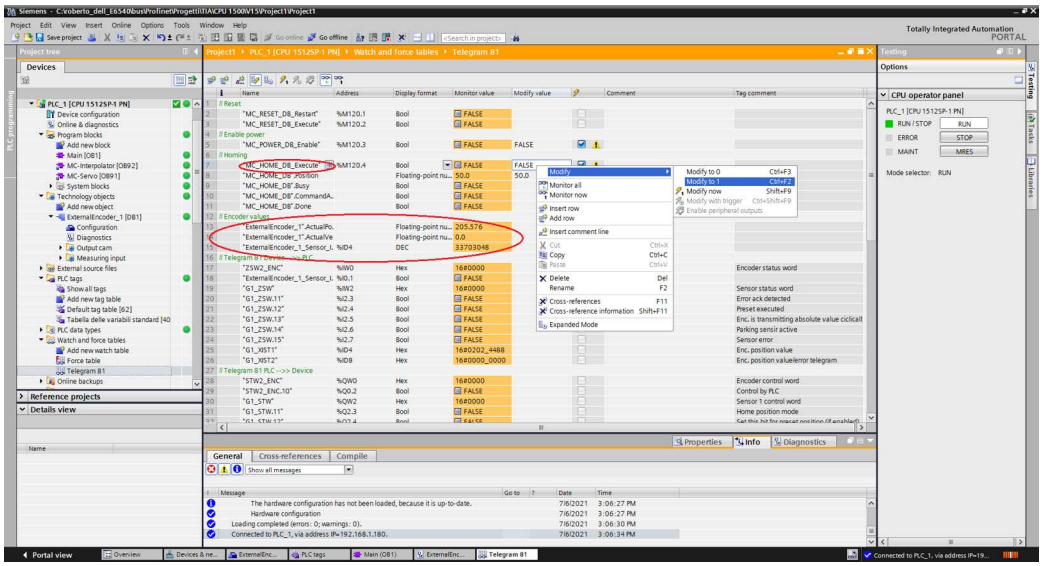

Now check again the current position of the encoder, see the **ExternalEncoder_1.ActualPosition** under the section **TO position and velocity**. It is “50.000” currently.

CHAPTER 6
PROFINET INTERFACE

A BRIEF INTRODUCTION TO PROFINET

PROFINET IO is the open industrial network devised for automation applications and built on the Ethernet application layer (TCP/IP and IT standards). For PROFINET IO the layers 1 through 7a of the ISO/OSI (Open Systems Interconnection) reference model are exclusively based on internationally proven standards. The functionality of PROFINET is defined in layer 7b. PROFINET IO complies with IEEE802.3 Ethernet Standard and follows the standards IEC 61158 and IEC61784, so it is 100% Ethernet compatible.

Its technology development and standardization are entrusted to Profibus & Profinet International (PI), the international umbrella organization including members of more than 1400 companies (**www.profibus.com**).

PROFINET IO is expressly developed to connect controllers (named IO controllers, equivalent to Profibus DP Masters), peripheral devices (named IO devices, similar to Profibus DP Slaves) and programming devices / PCs (named IO supervisors) with Ethernet Real Time (RT) and Isochronous Real Time (IRT) communication all the way. Real Time channel is used for time-critical process data and allows to meet the real-time requirements of the automation engineering (cycle times < 500 µs, jitter < 1 µs); while IRT is suitable for sophisticated motion control and high performance applications in factory automation and permits cycle times lower than 250 µs with less than 1 µs jitter. The standard TCP/IP channel is used for parametrization, configuration and acyclic read/write operations.

A PROFINET IO system requires at least one IO Controller and one IO Device. The most frequent network topologies can be implemented and even mixed together including Star, Line, Tree and Ring structures by means of copper or fiber-optic cables. The number of devices (each one fitted with its own MAC address, IP address and device name) which can be connected in the PROFINET network is virtually unlimited. The transmission rate is 100Mbit/s with full duplex communication (Fast Ethernet).

PROFINET IO Devices are configured using a configuration tool which acts as the IO Supervisor. The IO Supervisor uses a GSD (General Station Description) file based on XML language, thus it is called GSDML file, see "Description of the GSDML file" on page 19.

PROFINET ENCODERS FROM DATALOGIC

PROFINET encoders from Datalogic fulfill the requirements of the Application Classes 3 and 4, thus they are intended for clock-synchronous (isochronous) real-time applications with cyclic and synchronous data transmission. Anyway they can also be used in applications without clock synchronization. For detailed information on the application classes refer to "Application Class definition" on page 45.

PROFINET encoders support the telegrams 81 and 860. Further information can be found under "Telegrams" on page 48.

The IO data is transferred to and from the Encoder Object (EO, see "Encoder Object model" on page 46) via the Cyclic Data Exchange Service. The EO comprises the following mandatory functionalities:

- parameters;
- measuring task (i.e. position value, velocity value, ...);
- IO data (cyclical transmission of control and actual values);
- support for Alarm Mechanism.

Among the parameters available in the Profinet encoders from Datalogic: code sequence, scaling function, preset (Class 4 functionalities), position readout, offset value, velocity value, velocity measuring unit, acyclic Error Data communication and diagnostic information.

PROFINET at a glance

NO. OF STATIONS	SETTING THE IP ADDRESS	SETTING THE BAUD RATE	TRANSMISSION RATE	CABLE LENGTH	CABLE
Virtually unlimited	Software / automatic via DCP	-	100 Mbit/s full duplex	Up to 100 m (330 ft)	M12 D-coded Profinet connector

Overview of the encoder profiles

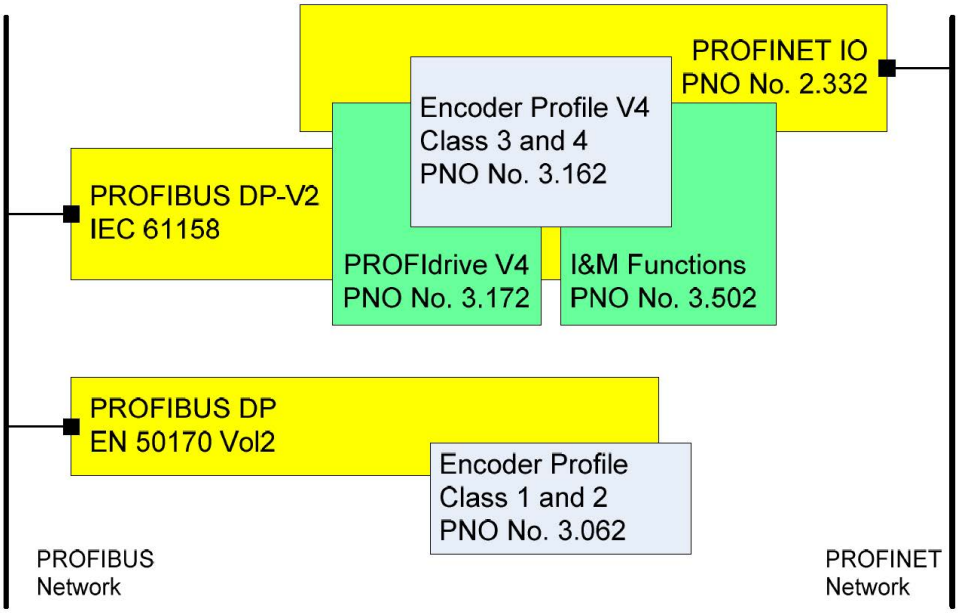

APPLICATION CLASS DEFINITION

The encoder supports two application classes: Class 3 and Class 4. A number of mandatory functions are specified for each application class, in addition all optional functions must be recognized by the encoder and handled so that the controller is able to determine whether an optional function is supported.

NOTE

There is no relation between the Encoder application classes and the application classes defined in the PROFIdrive profile.

Application Class 3

Encoder with base mode parameter access and limited parametrization of the encoder functionality. Isochronous mode is not supported.

Application Class 4

Encoder with scaling, preset, isochronous mode and base mode parameter access. A Class 4 configured encoder fully supports all functionalities.

NOTE

Datalogic encoders fulfill the requirements of CLASS 4.

ENCODER OBJECT MODEL

The Figure shows the general Encoder Object (EO) architecture. Central element of the EO is the Measuring Task where the measurements are made and the results are calculated. The properties of the EO is represented and controlled by parameters. The parameters are administered in the Parameter Data Base. For periodic transportation of control values to the EO and actual values from the EO, the Cyclic Data Exchange service is used. Exception situations out of the Measuring Task and the General State Machine may be signaled by the Alarm Mechanism to the controlling device.

The EO shall comprise as minimum mandatory functionality:

- Parameters;
- Measuring Task;
- IO Data (control value, actual value);
- Support for Alarm Mechanism;
- Optional functionality;
- Clock Synchronous operation.

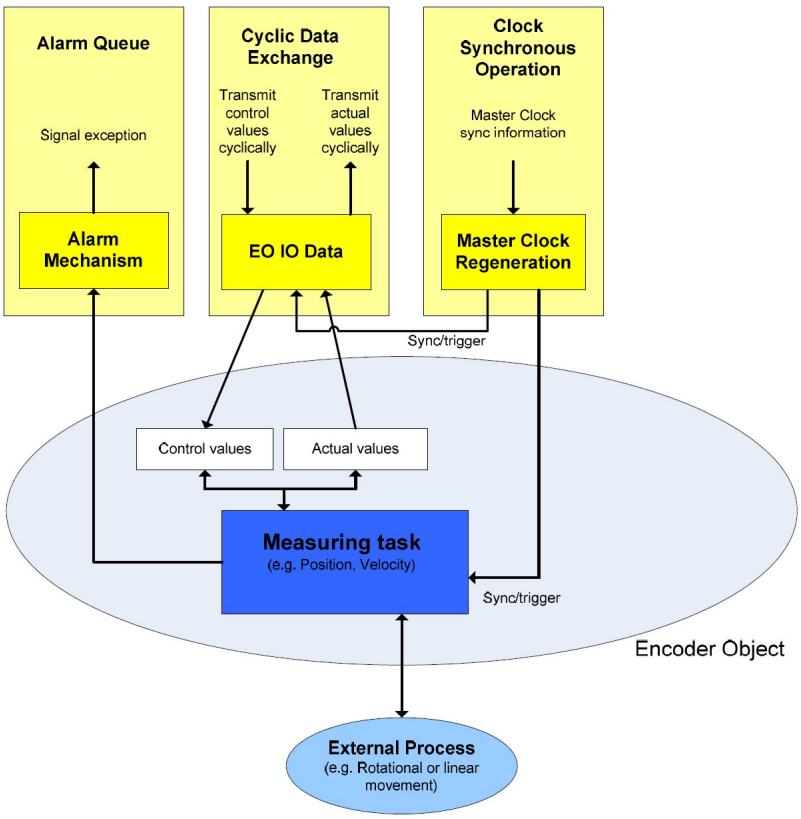

ENCODER OBJECT ARCHITECTURE

The Figure shows the general architecture and the mapping of the Encoder Object (EO) architectural elements to Communication Objects of the Peripheral Device for PROFINET IO. General with PROFINET IO the EO is mapped exactly to one Module/Slot. Slot 0 is exclusively reserved for Device representative purpose and therefore shall not be used for any Encoder module. Valid Slot numbers for Encoder Objects are from 1 to 0x7FFF. Every EO contains at least the mandatory Module Access Point (MAP) which is mapped to a dedicated EO representative Submodule. This MAP Submodule contains at least the mandatory Parameter Access Point (PAP) which is mapped to a dedicated Record Data Object. Via the EO representative Submodule (MAP) and the specified Record Data Object the access to the EO parameter manager is possible. The EO parameter manager has access to the EO local Parameter Data Base. In addition to the mandatory MAP submodule, the EO may contain additional submodules which may be used to:

represent communication end points for IO Data (cyclic data channel) and also to structure the IO Data in data blocks (telegrams, signals).

represent physical or logical Subobjects of the EO.

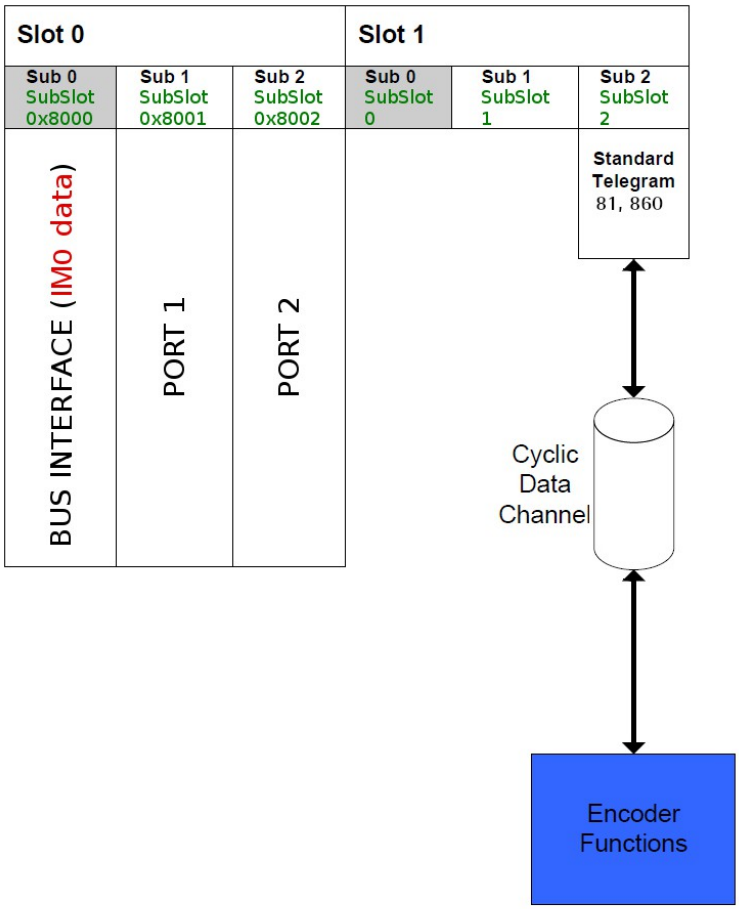

CHAPTER 7
PROFINET IO DATA DESCRIPTION

TELEGRAMS

A telegram is a rigidly defined bit stream carrying data. In each telegram the data length and the type of data which is sent to and from the IO controller is specified. PROFINET interface devices communicate and stay in sync by sending telegrams each other. The encoder supports two types of telegrams: Standard Telegram 81 and manufacturer-specific Telegram 860. They are described hereafter. Standard signals are fully described in the Cyclic Data Exchange - Std Signals, starting on page 50.

Standard Telegram 81

The Standard Telegram 81 is the default telegram. It uses 4 bytes to output data from the IO controller to the encoder and 12 bytes to input data from the encoder to the IO controller.

Output data CONTROLLER => DEVICE

	2 bytes	2 bytes
IO Data	1	2
Set point	STW2_ENC	G1_STW

Input data DEVICE => CONTROLLER

	2 bytes	2 bytes	4 byes		4 bytes	
IO Data	1	2	3	4	5	6
Actual value	ZSW2_ENC	G1_ZSW	G1_XIST1		G1_XIST2	

Telegram 860

The Telegram 860 is a manufacturer-specific encoder telegram.

It offers the following functionality:

- 32 bit current position value;
- 32 bit current velocity value;
- using cyclic data, in the G1_XIST1_PRESET_VALUE signal a preset value can be entered for the position (it must be executed by forcing high and then low the

Request set/shift of home position bit 12 in the G1_STW control word, see "Request set/shift of home position" on page 58).

The Telegram 860 uses 4 bytes to output data from the IO controller to the encoder and 8 bytes to input data from the encoder to the IO controller.

Output data CONTROLLER => DEVICE

	4 bytes	
IO Data	1	2
Set point	G1_XIST1_PRESET_VALUE	

NOTE

Bit 31 is ignored.

Input data DEVICE => CONTROLLER

	4 bytes		4 byes	
IO Data	1	2	3	4
Actual value	G1_XIST1		NIST_B	

CHAPTER 8

CYCLIC DATA EXCHANGE - STD SIGNALS

IO data is transferred via the Cyclic Data Exchange. A series of standard signals is defined to configure the IO data. In the following table the standard signals are summarily described.

SIGNIFICANCE	ABBREVIATION	LENGTH (BITS)	DATA TYPE
Sensor 1 current position value 1	G1_XIST1	32	Unsigned
Sensor 1 current position value 2	G1_XIST2	32	Unsigned
Sensor 1 preset value	G1_XIST1_PRESET_VALUE	32	Unsigned
Encoder Control word 2	STW2_ENC	16	Unsigned
Encoder Status word 2	ZSW2_ENC	16	Unsigned
Sensor 1 Control word	G1_STW	16	Unsigned
Sensor 1 Status word	G1_ZSW	16	Unsigned
Speed current value B	NIST_B	32	Signed

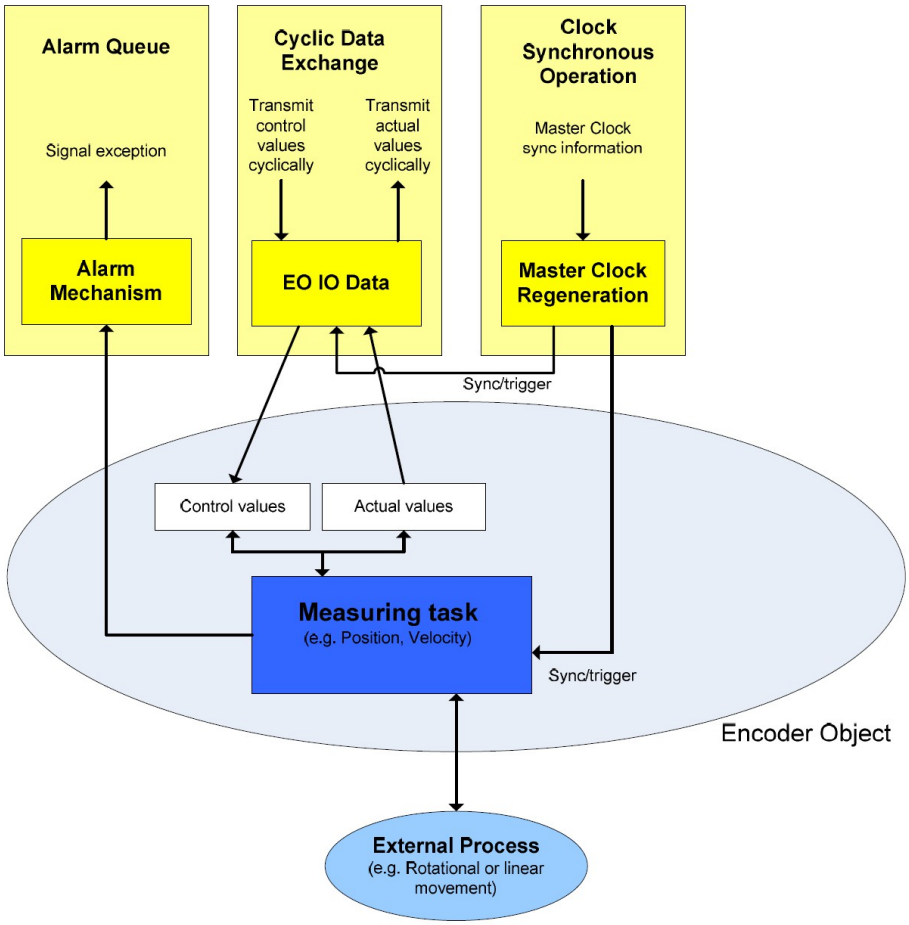
Alarm Queue
Signal exception
Alarm Mechanism
Cyclic Data Exchange
Transmit control values cyclically
Transmit actual values cyclically
EO IO Data
Clock Synchronous Operation
Master Clock sync information
Master Clock Regeneration
Sync/trigger
Control values
Actual values
Measuring task
(e.g. Position, Velocity)
Sync/trigger
Encoder Object
External Process
(e.g. Rotational or linear movement)

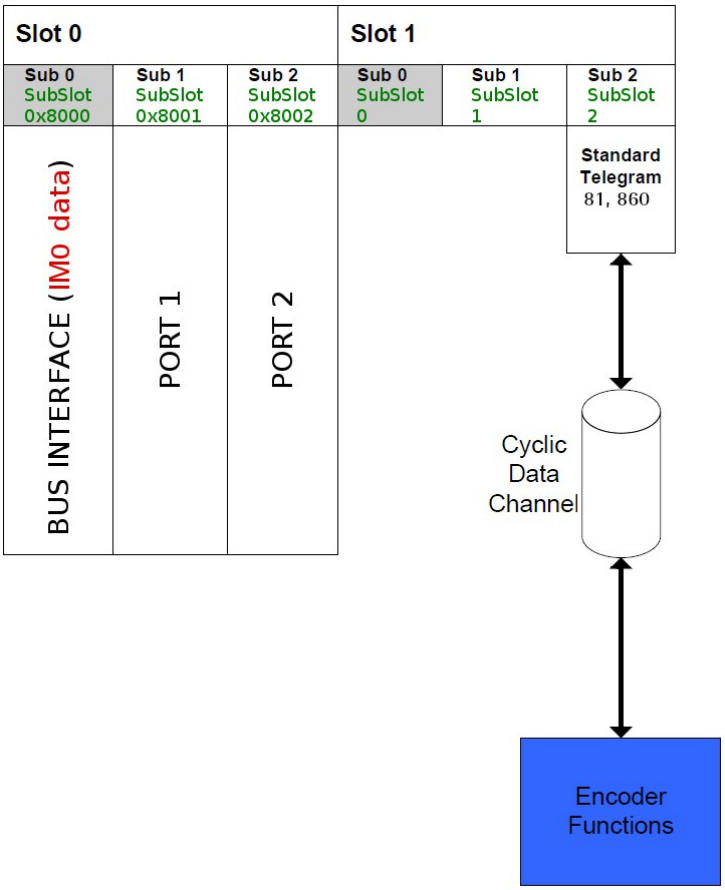
Slot 0
Slot 1
Sub 0 SubSlot 0x8000
Sub 1 SubSlot 0x8001
Sub 2 SubSlot 0x8002
Sub 0 SubSlot 0
Sub 1 SubSlot 1
Sub 2 SubSlot 2
BUS INTERFACE (IMo data)
PORT 1
PORT 2
Standard Telegram 81, 860
Cyclic Data Channel
Encoder Functions

LIST OF THE AVAILABLE STANDARD SIGNALS

G1_XIST1

[Unsigned, 32 bits]

It is defined as Sensor 1 current position value 1. This signal is the current (real) absolute position of the encoder expressed in binary notation.

Format definition:

- all values are represented in binary notation;
- the recommended default shift factor is zero (right aligned value) for both G1_XIST1 and G1_XIST2;
- the settings in the encoder parameter data affect the position value in both G1_XIST1 and G1_XIST2.

Example

Here follows a format example.

25-bit absolute multiturn encoder, 13-bit singleturn resolution (8,192 counts per revolution), 12-bit multiturn resolution (4,096 revolutions)

M = Multiturn value, number of revolutions
S = Singleturn value, number of counts per revolution

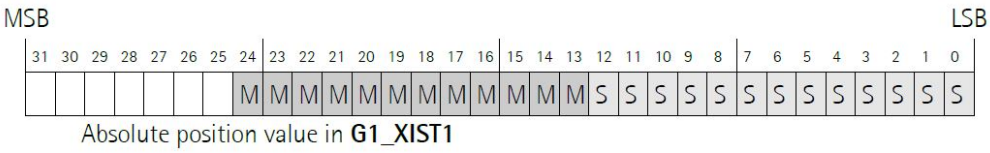

Absolute position value in **G1_XIST1**

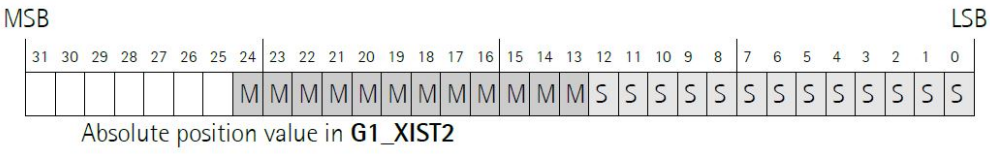

Absolute position value in **G1_XIST2**

G1_XIST2

[Unsigned, 32 bits]

It is defined as Sensor 1 current position value 2. By default this signal is the current (real) absolute position of the encoder expressed in binary notation yet it has a different meaning if an error is active.

If no error is active:

this signal informs about the current position value of the encoder, provided that the bit **Request absolute value cyclically** (bit 13 of control word G1_STW) is set to 1; otherwise this value is 0.

If an error is active:

this signal informs about the active error. For the complete list of the error codes refer to "Error codes in G1_XIST2" on page 61.

Format definition:

- all values are represented in binary notation;
- the recommended default shift factor is zero (right aligned value) for both G1_XIST1 and G1_XIST2;
- the settings in the encoder parameter data affect the position value in both G1_XIST1 and G1_XIST2;
- G1_XIST2 displays the error telegram instead of the position value if an error occurs.

For the format example see G1_XIST1 above.

G1_XIST1_PRESET_VALUE

[Unsigned, 32 bits]

Using the G1_XIST1_PRESET_VALUE signal, the user can enter a preset value for the encoder via the cyclic data telegram 860 (see on page 73), and activate it by forcing high and then low the **Request set/shift of home position** bit 12 in the G1_STW control word (see "Request set/shift of home position" on page 58).

Preset function is meant to assign a desired value to a known physical position of the system. The chosen physical position will get the value set next to this index and all the previous and following mechanical positions will get a value according to it.

The structure of the G1_XIST1_PRESET_VALUE signal is shown below.

NOTE

We suggest activating the preset value when the encoder is in stop.

MSB LSB

31	30	29	28	27	26	25	24	23	22	21	20	19	18	17	16	15	14	13	12	11	10	9	8	7	6	5	4	3	2	1	0
N	P	P	P	P	P	P	P	P	P	P	P	P	P	P	P	P	P	P	P	P	P	P	P	P	P	P	P	P	P	P	P

P = preset value (30 bits) for G1_XIST1 in the format/resolution of G1_XIST1. The preset value must be less than or equal to **Total measuring range** - 1.
N = not used

STW2_ENC

[Unsigned, 16 bits]

It is defined as Encoder control word 2. Control word STW2_ENC includes the Control by PLC mechanisms from PROFIdrive STW1 and the Controller Sign-Of-Life mechanism from PROFIdrive STW2.

BIT	MEANING
0 ... 6	Reserved
7	Not used
8 & 9	Reserved
10	Control by PLC
11	Reserved
12 ... 15	Controller Sign-Of-Life

Control by PLC

Bit 10

If the Compatibility Mode is enabled (see "Compatibility Mode" on page 66), then the bit 10 Control by PLC is ignored. In this case the control word G1_STW and the setpoint are always checked.

If the Compatibility Mode is disabled (see "Compatibility Mode" on page 66), then the bit 10 Control by PLC is checked. So the control word G1_STW and the setpoint are checked only if the bit Control by PLC is set.

BIT	VALUE	SIGNIFICANCE	COMMENT
10	1	Control from PLC	Control via interface, EO IO Data is processed.
	0	No control from PLC	EO IO Data not valid, except Sign-Of-Life

Controller Sign-Of-Life

Bits 12 ... 15

For more information on the control word STW2_ENC please refer to the PROFIdrive Technical Specification document.

ZSW2_ENC

[Unsigned, 16 bits]

It is defined as Encoder status word 2. The encoder status word 2 ZSW2_ENC includes the Control by PLC mechanism from PROFIdrive ZSW1 and the Slave Sign-Of-Life mechanism from PROFIdrive ZSW2.

BIT	MEANING
0 ... 2	Reserved
3	Not used
4 ... 8	Reserved
9	Control requested
10 & 11	Reserved
12 ... 15	Encoder Sign-Of-Life

Control requested

Bit 9

BIT	VALUE	SIGNIFICANCE	COMMENT
9	1	Control requested	The automation system is requested to assume control.
	0	No Control requested	Control by the automation system is not possible, only possible at the device or by another interface.

Encoder Sign-Of-Life

Bits 12 ... 15

For more information on the status word 2 ZSW2_ENC please refer to the PROFIdrive Technical Specification document.

G1_STW

[Unsigned, 16 bits]

It is defined as Sensor 1 control word. This control word controls the functionality of major encoder functions.

BIT	MEANING
0 ... 7	Not used
8 ... 10	Reserved
11	Home position mode
12	Request set/shift of home position
13	Request absolute value cyclically
14	Activate parking sensor
15	Acknowledging a sensor error

NOTE

If the Activate parking sensor is activated (bit 14 = 1) the encoder is still on bus with the slave Sign-Of-Life active and the encoder error and diagnostics switched off.

Home position mode

Bit 11

Request set/shift of home position

Bit 12

The preset function is controlled by bits 11 and 12 in this Sensor 1 control word G1_STW and acknowledged by the bit 12 Set/shift of home position executed in the sensor status word G1_ZSW. The preset value is 0 by default and can be set by using the Telegram 860 and G1_XIST1_PRESET_VALUE (see "G1_XIST1_PRESET_VALUE" on page 54). The preset function has an absolute and a relative operating mode selectable by means of the bit 11 Home position mode in this Sensor 1 control word G1_STW (0 = absolute; 1 = relative). Bit 11 and bit 12 in the Sensor 1 control word G1_STW control the preset function as described in the table below.

BIT 12	BIT 11	ACTION
0	X	**Normal operating mode.** The encoder will make no change in the output value.
1	0	**Preset mode absolute** The encoder reads the current position value and calculates an internal offset value from the preset value G1_XIST1_PRESET_VALUE and the read position value. The position value is then shifted with the calculated offset value to get the current position value equal to the preset value. The encoder acknowledges the preset by setting the bit 12 Set/shift of home position executed in the sensor status word G1_ZSW. Now the bit 12 Request set/shift of home position in the sensor 1 control word G1_STW can be set to zero by the Master. The encoder will end the preset cycle by clearing the bit 12 Set/shift of home position executed in the sensor status word G1_ZSW. The new internal offset value is securely stored in case of voltage breakdown and uploaded again at each power on.
1	1	**Preset mode relative (offset)** The encoder uses the preset value G1_XIST1_PRESET_VALUE as a relative offset value. In this mode the current position value is shifted by the value deriving from the preset value. **EXAMPLE** A preset value "1000" is intended to shift the current position value by 1000 steps in the positive counting direction. So a "real" position value of "5000" will have the value "6000" after the relative shifting sequence. The encoder will set the bit 12 Set/shift of home position executed in the sensor status word G1_ZSW to acknowledge the execution of the shifting. The bit 12 Request set/shift of home position in the sensor control word G1_STW can now be set to zero by the Master. The encoder will end the preset cycle by clearing the bit 12 Set/shift of home position executed in the sensor status word G1_ZSW. The internal offset value will be shifted according to the transferred preset value. The new offset value is securely stored in case of voltage breakdown and uploaded again at each power on.

The Preset command automatically saves the calculated internal offset values.

NOTE

Refer to "G1_XIST1 Preset control" on page 64 **and** "Preset diagram" on page 86

Request absolute value cyclically

Bit 13

BIT	SIGNIFICANCE	COMMENT
13	=1 : Request absolute value cyclically	Request of additional cyclic transmission of the current absolute position in G1_XIST2.

Activate parking sensor

Bit 14

BIT	SIGNIFICANCE	COMMENT
14	=1 : Activate parking sensor	Request to stop monitoring the measuring system and the current value measurements in the drive. This makes it possible to disconnect the encoder from the line without needing to change the drive configuration or causing a fault. In this case all current errors of the encoder are cleared. The parking of the encoder while the drive is running is not allowed and will result in a sensor interface error (error code 0x03 in G1_XIST2).

See also "Parking sensor diagram" on page 87.

Acknowledging a sensor error

Bit 15

BIT	SIGNIFICANCE	COMMENT
15	=1 : Acknowledging a sensor error	Request to acknowledge a sensor error (bit 15 Sensor error of G1_ZSW).

G1_ZSW

[Unsigned, 16 bits]

It is defined as Sensor 1 status word. This status word defines the states, acknowledgments and error messages of the encoder and its main functions

BIT	MEANING
0 ...9	Not used
10	Reserved
11	Requirements of error acknowledge detected
12	Set/shift of home position executed
13	Transmit absolute value cyclically
14	Parking sensor active
15	Sensor error

NOTE

If the bit 13 Transmit absolute value cyclically or the bit 15 Sensor error are not set, there is no valid value or error code transferred in G1_XIST2.

NOTE

The bit 13 Transmit absolute value cyclically and the bit 15 Sensor error cannot be set at the same time as they are used to indicate either a valid position value transmission (bit 13) or the error code transmission (bit 15) in G1_XIST2.

NIST_B

[Signed, 32 bits]

It is defined as current velocity value B.

Velocity value is calculated every 100 ms.

Refer also to "Velocity measuring unit" on page 69.

ERROR CODES IN G1_XIST2

Error codes are sent in G1_XIST2 if an error occurs. For information about G1_XIST2 refer to "G1_XIST2" on page 53.

G1_XIST2	MEANING	EXPLANATION
0x0F02	Master sign of life fault	The number of permissible failures of the Master sign of life was exceeded.
0x0F04	Synchronization fault	The number of permissible failures for the bus cycle was exceeded.
0x1001	Memory error	Error while writing on or reading the internal non-volatile memory.
0x1002	Parametrization error	User parameter data assignment error. Example: Measuring units / Revolution and Total measuring range not compatible.

CHAPTER 9
ENCODER PARAMETERS

USER PARAMETER DATA

User parameter data listed in the table below is sent to the encoder in the start-up phase.

PARAMETER	INDEX	DATA TYPE	DEFAULT	COMMENT
Type of encoder	516	BitArea	0: AMT58 multiturn 13/14	
Code sequence	517	Bit	0 (CW)	
Class 4 functionality	518	Bit	1 (enabled)	
G1_XIST1 Preset control	519	Bit	0 (enabled)	
Scaling function control	520	Bit	0 (disabled)	
Alarm channel control	521	Bit	0 (disabled)	Only supported in Compatibility Mode
Compatibility mode	522	Bit	1 (disabled = profile version V4.1)	
Measuring unis / Revolution	523	UnSigned32	8.192	
Total measuring range	524	UnSigned32	134.217.728	
Maximum tolerated failures of Master Sign-Of-Life	525	UnSigned8	1	Only supported in Compatibility Mode
Velocity measuring unit	526	BitArea	0 (Steps/s)	

Type of encoder

[Index 516]

The index contains information about the type of encoder.

ATTRIBUTE	MEANING	VALUE
AMT58 multiturn 13/14	Installed encoder: AMT58, resolution: 13 x 14 bits	0

Default = 0 (min. = 0, max. = 0)

Code sequence

[Index 517]

Code sequence sets whether the absolute position value output by the encoder increases (count up information) when the encoder shaft rotates clockwise (0 = CW) or counter-clockwise (1 = CCW). CW and CCW rotations are viewed from the shaft end. This parameter is processed only if Class 4 functionality is enabled.

ATTRIBUTE	MEANING	VALUE
CW	Absolute position value increasing (count up information) when the shaft rotates clockwise (viewed from shaft end)	0
CCW	Absolute position value increasing (count up information) when the shaft rotates counter-clockwise (viewed from shaft end)	1

Default = 0 = CW (min. = 0, max. = 1)

CAUTION

Changing this value causes also the position calculated by the controller to be necessarily affected. Therefore, it is mandatory to execute a new preset after setting this parameter.

Class 4 functionality

[Index 518]

For any information on the implemented Application Classes refer to "Application Class definition" on page 45.

If it is enabled, Code sequence, G1_XIST1 Preset control and Scaling function control affect the position value in G1_XIST1 and G1_XIST2. However the preset will not affect the position value in G1_XIST1 if the parameter G1_XIST1 Preset control is disabled; it will always affect G1_XIST2 instead.

ATTRIBUTE	MEANING	VALUE
Disable	Code sequence, G1_XIST1 Preset control and Scaling function control disabled	0
Enable	Code sequence, G1_XIST1 Preset control and Scaling function control enabled	1

Default = 1 = enable (min. = 0, max. = 1)

G1_XIST1 Preset control

[Index 519]

This parameter is available only if Class 4 functionality is enabled.

This parameter controls the effect of a preset on the G1_XIST1 current value. When it is enabled, Preset will affect the position value in G1_XIST1.

ATTRIBUTE	MEANING	VALUE
Enable	G1_XIST1 is affected by a Preset command	0
Disable	Preset does not affect G1_XIST1	1

Default = 0 = enable (min. = 0, max. = 1)

CAUTION

G1_XIST1 Preset control is disabled by setting the value 1.

NOTE

There is no functionality of this parameter if the Class 4 functionality parameter is disabled.

Scaling function control

[Index 520]

This parameter enables / disables the Scaling function. When this parameter is disabled, the device uses the hardware singleturn and multiturn resolutions; when it is enabled, the device uses the resolutions set next to the parameters Measuring units / Revolution and Total measuring range. Refer also to "Scaling function parameters" on page 67.

ATTRIBUTE	MEANING	VALUE
Disable	Scaling function disabled	0
Enable	Scaling function enabled	1

Default = 0 = disable (min. = 0, max. = 1)

NOTE

There is no functionality of this parameter if the Class 4 functionality parameter is disabled.

Alarm channel control

[Index 521]

This parameter enables / disables the encoder specific Alarm channel transferred as Channel Related Diagnosis. This functionality is used to limit the amount of data sent in isochronous mode.

If the value is zero (0 = default value), only the communication related alarms are sent via the alarm channel. If the value is one (1), also the encoder specific faults and warnings are sent via the alarm channel.

ATTRIBUTE	MEANING	VALUE
Disable	No profile specific diagnosis	0
Enable	Profile specific diagnosis	1

Default = 0 = disable (min. = 0, max. = 1)

NOTE

This parameter is only supported in compatibility mode (see "Compatibility Mode" on page 66**).**

Compatibility Mode

[Index 522]

This parameter defines whether the encoder has to run in a mode compatible with Version 3.1 of the Encoder Profile. See the table below for an overview of the functions affected when the compatibility mode is enabled.

ATTRIBUTE	MEANING	VALUE
Enable	Compatibility with Encoder Profile V3.1	0
Disable	No backward compatibility, compatible with Encoder Profile V4.1	1

Default = 1 = disable (min. = 0, max. = 1)

FUNCTION	COMPATIBILITY MODE ENABLED (=0)	COMPATIBILITY MODE DISABLED (=1)
Control by PLC (STW2_ENC)	Ignored. The control word G1_STW and setpoint values are always valid. Control requested (ZSW2_ENC) is not supported and is set to 0	Supported
User parameter Maximum tolerated failures of Master Sign-Of-Life	Supported	Not supported. One Sign-Of-Life failure tolerated.
User parameter Alarm channel control	Supported	Not supported. The application alarm channel is active and controlled by a PROFIdrive parameter

CAUTION

If the encoder is used as a TO Technology Object (see "TO Technology Objects" on page 34**, Compatibility Mode parameter must be set to 0 = Enable = Compatible with Encoder Profile V3.1.**

SCALING FUNCTION PARAMETERS

Using the scaling function parameters the absolute position value of the encoder is converted by the software in order to customize the resolution of the encoder according to needs. The scaling parameters will only be activated if the parameters Class 4 functionality and Scaling function control are enabled.

The permissible range for the scaling parameters is limited by the hardware resolution of the encoder.

Example

In a 27-bit encoder having a singleturn resolution of 13 bits (8,192 cpr) and a number of revolutions of 14 bits (16,384 revolutions), the permissible value for the Measuring units / Revolution is between 2^0 and 2^{13} (2^{13} = 8,192) while the permissible value for the Total measuring range is between 2^0 and 2^{27} ($2^{27} = 2^{13} * 2^{14}$ = 134,217,728).

Measuring units / Revolution

[Index 523]

It is used to program a user specific resolution per each revolution (singleturn resolution). Allowed values are less than or equal to the hardware counts per revolution (physical singleturn resolution). We suggest setting values that are a power of 2 (1, 2, 4, … 2048, 4096, …). See the parameter Total measuring range below.

Default = 8192 (min. = 1, max. = 8,192)

NOTE

There is no functionality of this parameter if the Scaling function control parameter is disabled.

Example

The AMT58...13X14-PN multiturn encoder has a singleturn resolution of 13 bits (8,192 cpr); the permissible value for the Measuring units / Revolution will be between 2^0 and 2^{13} (2^{13} = 8,192).

NOTE

When you change the value next to this parameter, then you are required to enter a new preset.

Total measuring range

[Index 524]

This parameter sets the number of distinguishable steps over the total measuring range. Allowed values are less than or equal to the total hardware resolution value (physical multiturn resolution = number of physical counts per revolution + number of physical revolutions).

We recommend the Number of revolutions to be set to a power of 2.

The set Number of revolutions results from the following calculation:

$$\text{Number of revolutions} = \frac{\text{Total measuring range}}{\text{Measuring units / Revolution}}$$

Setting the Number of revolutions to a value which is a power of 2 is meant to avoid problems when using the device in endless operations requiring the physical zero to be overstepped. If you set the Number of revolutions which is not a power of 2, a so-called “Red Zone” is generated before the physical zero. For more detailed information refer to "Red Zone" on page 70).

Default = 134217728 (min. = 1, max. = 134,217,728)

NOTE

There is no functionality of this parameter if the Scaling function control parameter is disabled.

Example

The AMT58...13X14-PN encoder has a singleturn resolution of 13 bits (8,192 cpr) and a multiturn resolution of 14 bits (16,384 revolutions). The permissible value for the Measuring units / Revolution will be between 2^0 and 2^{13} (2^{13} = 8,192) while the permissible value for the Total measuring range will be between 2^0 and 2^{27} ($2^{27} = 2^{13} * 2^{14}$ = 134,217,728).

NOTE

When you change the value next to this parameter, then you are required to enter a new preset.

Maximum tolerated failures of Master Sign-Of-Life

[Index 525]

This parameter sets the number of allowed failures of the Master sign of life. The default value is one (1).

Default = 1 (min. = 1, max. = 255)

NOTE

This parameter is only supported in compatibility mode (see "Compatibility Mode" on page 66**).**

Velocity measuring unit

[Index 526]

This parameter defines the engineering unit of the velocity value used to configure the signal NIST_B. Standard telegram 81 has no velocity information included and the encoder does not use the velocity measuring unit information in this case. Telegram 860 include velocity output (NIST_B) and need a declaration of the velocity measuring unit.

PARAMETER	MEANING	VALUE
Velocity measuring unit	Definition of the engineering unit for the encoder velocity output value	See table below

VELOCITY MEASURING UNITS	VALUE
Steps / s	0
Steps / 100 ms	1
Steps / 10 ms	2
RPM	3

Default = 0= Step/s (min. = 0, max. = 3)

NOTE

Please note that the velocity value is always calculated every 100 ms.

RED ZONE

The so-called “Red Zone” problem occurs when the Number of revolutions (i.e. the Total measuring range / Measuring units / Revolution) is not a power of 2.

When this problem arises, the device must operate within the “red zone” for a certain number of positions. The size of the “red zone” is variable. To calculate it we must subtract the overall set resolution from the overall physical resolution of the device as many times as until the difference is less than the overall set resolution. When the encoder crosses the limit of the last value in the overall physical resolution, a counting error occurs, i.e. a jump in the position count. The problem is represented graphically in the following Figure.

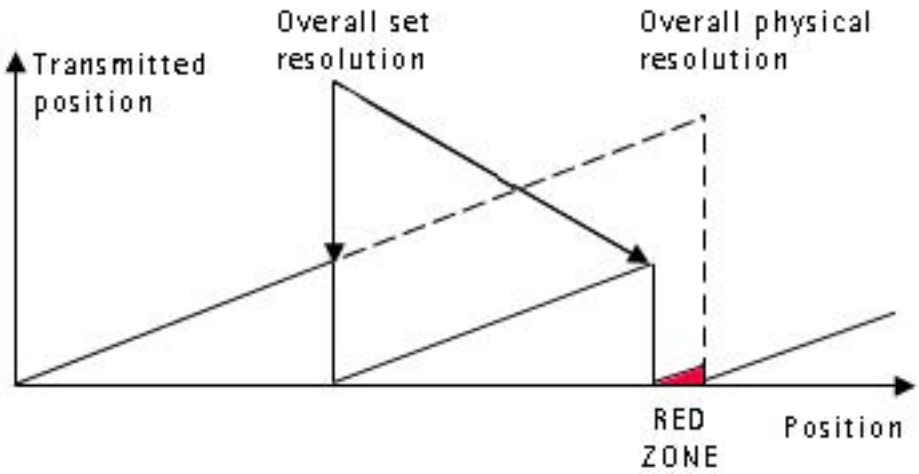

Example

AMT58...13X14PN multiturn encoder

Physical resolution:

- Singleturn physical resolution = 8,192 counts/rev. = 13 bits (2^{13})
- Multiturn physical resolution = 16,384 revolutions = 14 bits (2^{14})
- Overall physical resolution = 134,217,728 = 27 bits (2^{27})

Set values:

- Measuring units / Revolution = 8,192 = 2^{13}
- Total measuring range = 122,880,000 = it is NOT a power of 2

It results from this:

- Number of revolutions = 15,000 = it is NOT a power of 2

This can be proved easily:

$$\frac{\text{Overall physical resolution}}{\text{Overall set resolution}} = \frac{134{,}217{,}728}{122{,}880{,}000} = 1.092...$$

It follows that for 11,337,728 positions (134,217,728 - 122,880,000 * 1 = 11,337,72), i.e. for 692 revolutions, the encoder will work within the limits of the so-called “red zone”. After position 11,337,728 (i.e. at the end of the “red zone”) a position error (namely, a “jump” in the position count) would happen as the following position would be “0”. See the Figure in the previous page.

NOTE

Make attention using the values sent by the encoder while working within the limits of the “Red Zone”. When the encoder changes from normal status to “Red Zone” status (and vice versa) a jump of position occurs.

CHAPTER 10
REAL-TIME CLASS COMMUNICATION

Within PROFINET IO, process data and alarms are always transmitted in real time. Real-Time for PROFINET (RT) is based on the definitions of IEEE and IEC for high-performance data exchange of I/O data. RT communication constitutes the basis for data exchange in PROFINET IO.

Real-time data are handled with higher priority compared to TCP(UDP)/IP data. This method of data exchange allows bus cycle times in the range of a few hundred milliseconds to be achieved.

Isochronous data exchange with PROFINET is defined in the Isochronous-Real-Time (IRT) concept. IRT communication is always clock synchronized and only possible within an IRT domain. Isochronous real-time communication differs from real-time communication mainly in its isochronous behavior: the start of a bus cycle can deviate by a maximum of 1 µs (jitter is less than 1 µs). IRT is required in motion control applications (positioning operations), for example. This communication is required, for example, for high-accuracy closed-loop control tasks.

REAL-TIME CLASSES IN PROFINET IO

To enable enhanced scaling of communication options and, thus, also of determinism in PROFINET IO, real-time classes have been defined for data exchange. From the user perspective, these classes involve unsynchronized and synchronized communication.

PROFINET IO differentiates the following classes for RT communication.

They differ not in terms of performance but in determinism.

REAL-TIME CLASS 2 (RT2) - NOT SYNCHRONIZED

In real-time class 2, frames are transmitted via unsynchronized communication (asynchronous communication).

To activate the real-time class 2 both the IO controller and the IO device must be set the same as “Not synchronized”.

REAL-TIME CLASS 3 (IRT_TOP) (RT3)

Isochronous data exchange with PROFINET is defined in the Isochronous-Real-Time (IRT) concept. IRT communication is always clock synchronized and only possible within an IRT domain. Isochronous real-time communication differs from real-time communication mainly in its isochronous behavior: the start of a bus cycle can deviate by a maximum of 1 µs (jitter is less then 1 µs).

This communication is required, for example, for high-accuracy closed-loop control tasks.

Only industrial IRT switches can be used.

Typical cycle time 1 ms or less. When the encoder is installed as a TO Technology Object (see "TO Technology Objects" on page 34), the cycle time must be greater than or equal to 2 ms. All network components must support PROFINET IRT frame priority processing. Position values are captured with an accuracy of +/- 1 µs or better, with respect to the highly accurate bus clock.

Setting an isochronous communication

To activate the real-time class 3 both the IO controller and the IO device must be configured. To do this proceed as follows.

1. Enter the Network view: the bus connection between the encoder and the PLC is established.

Figure 1. Encoder inserted in the Network view

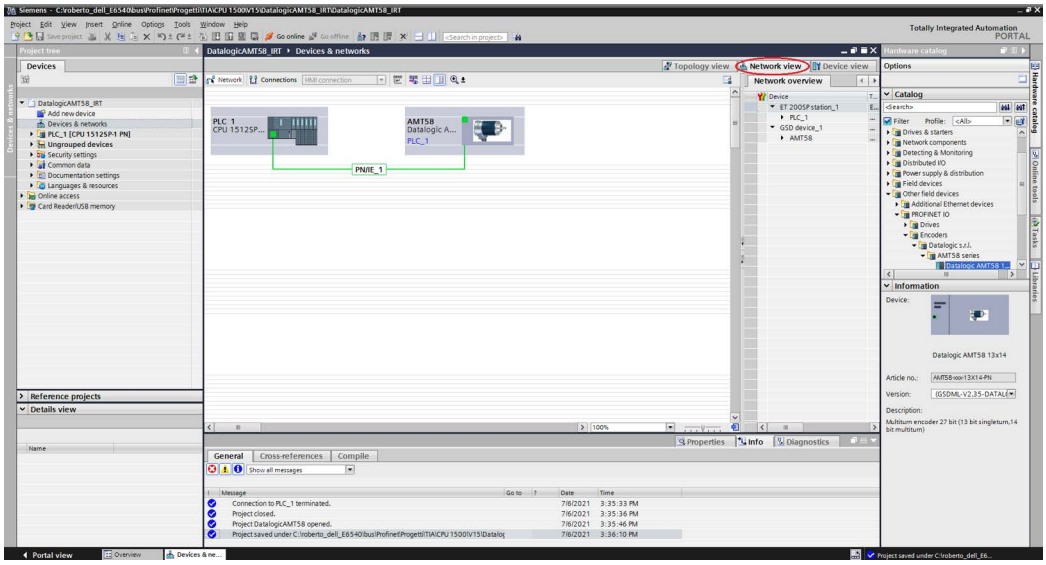

2. Now enter the Topology view and connect the PROFINET interface of the encoder to the PROFINET interface of the CPU, i.e. interconnect the corresponding ports of the PROFINET interfaces of the devices.

Figure 2. Setting the topology

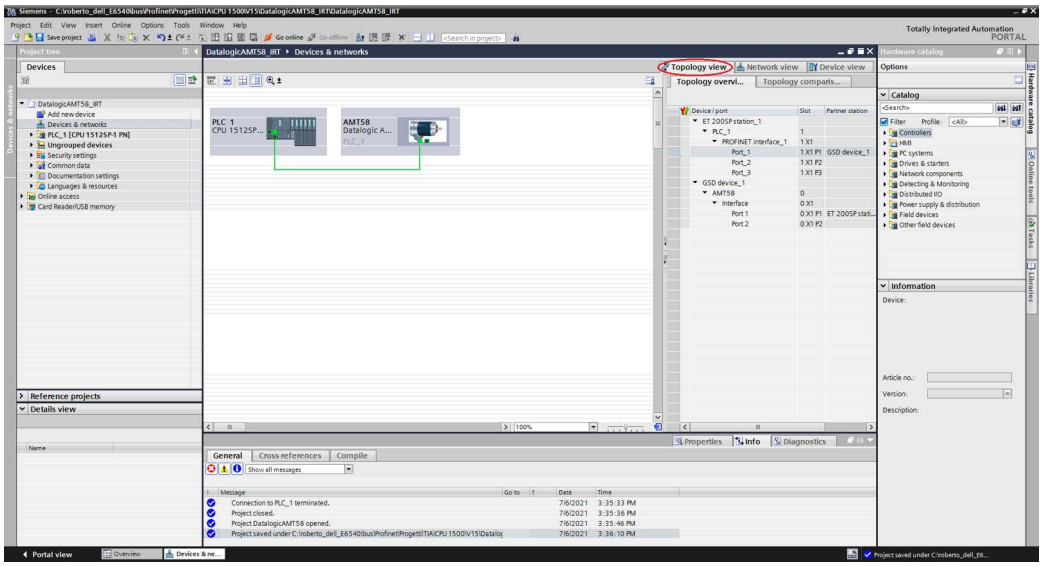

3. Select the encoder and change to the Device view; then, in the properties of the encoder, navigate via General > PROFINET interface > Advanced options > Isochronous mode and display the Isochronous mode area.

Figure 3. Isochronous area

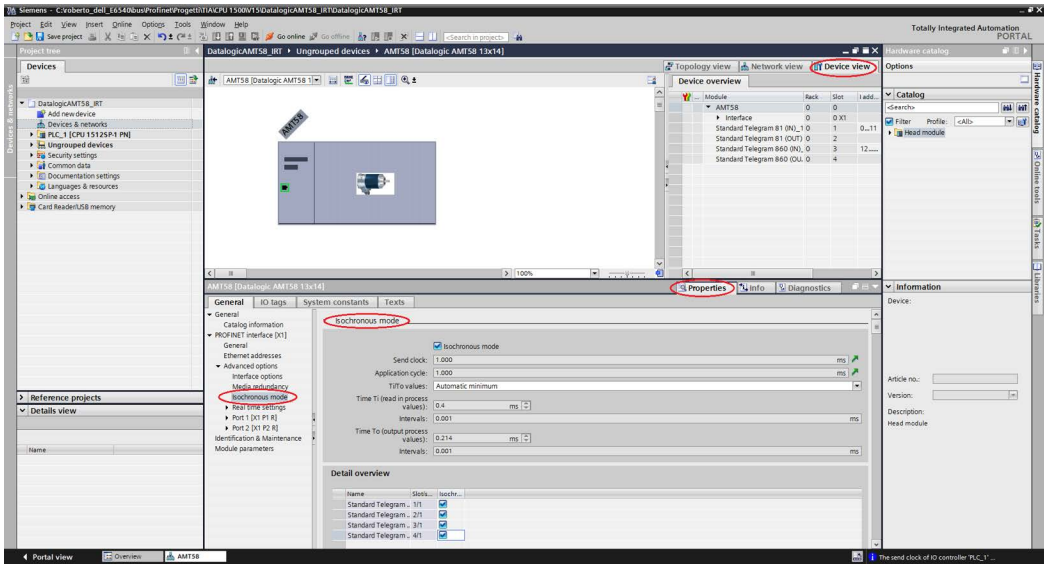

4. Select the Isochronous mode option in the Isochronous mode area. In the Detail overview area, you see all modules of the configuration you can operate isochronously. Select the Isochronous mode option for all telegrams.

Figure 4. Setting the Isochronous mode

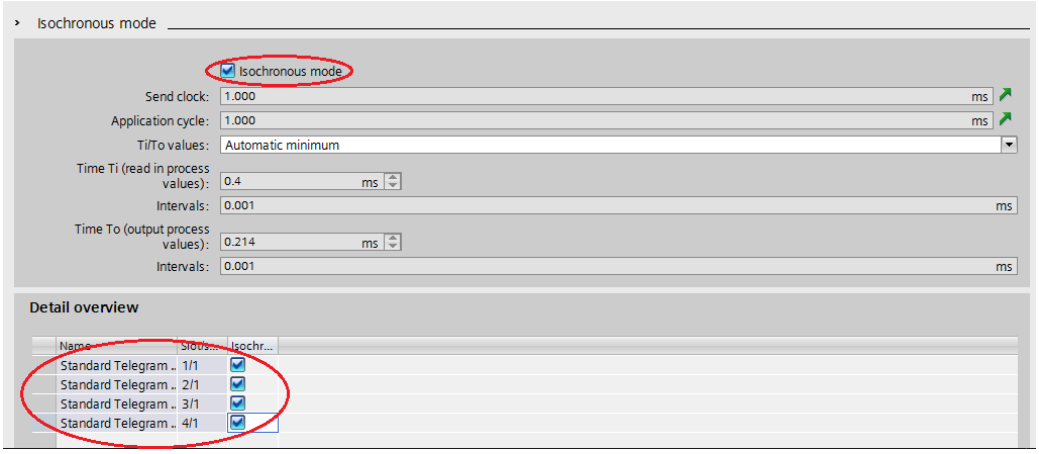

5. Select each I/O module in the Device view. Navigate to the I/O addresses area in the Inspector window and set each Telegram as shown in the Figures hereafter. You use the properties of the I/O addresses of the corresponding I/O module to:
   - set isochronous mode for the module;
   - assign the inputs and outputs of the module to a process image partition and an isochronous mode interrupt OB.

   Set Synchronous Cycle under Organization block and PIP 1 under Process image.

NOTE

For more information on PIPs (Process Image Partitions) refer to "PIP (Process Image Partition)" on page 77.

Figure 5. Telegram 81 IN

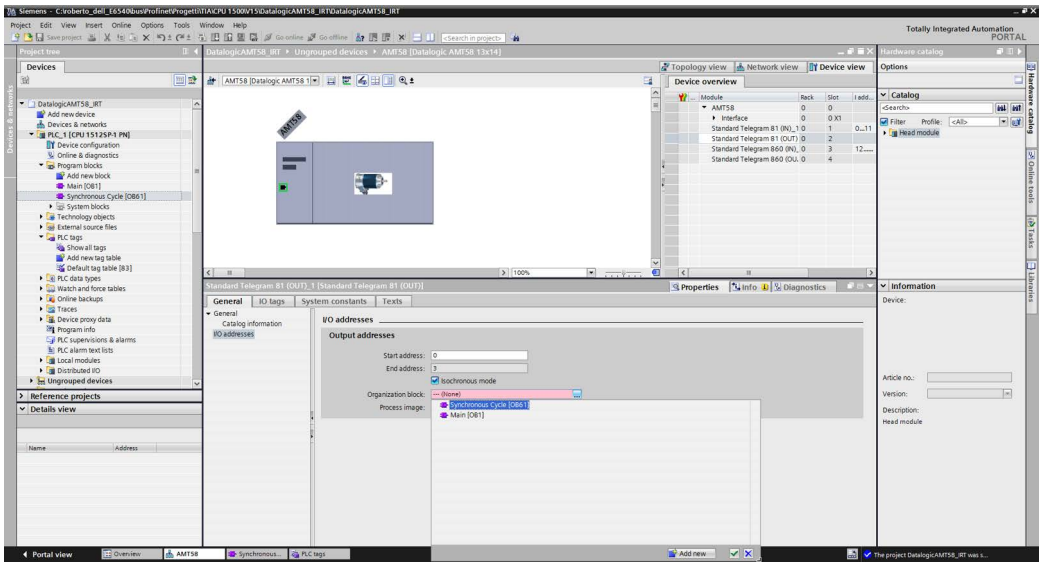

Figure 6. Telegram 81 OUT

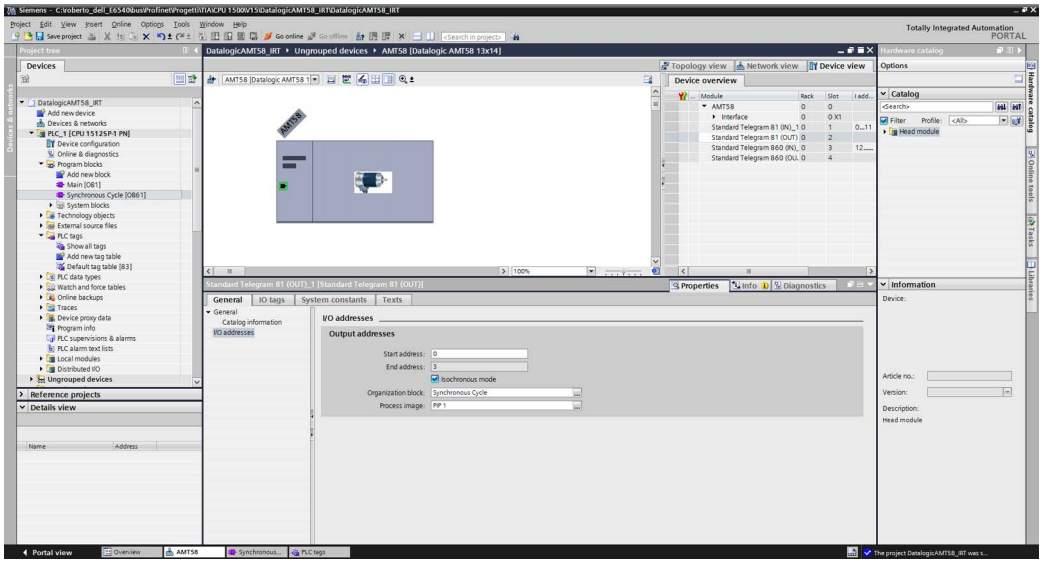

Figure 7. Telegram 860 IN

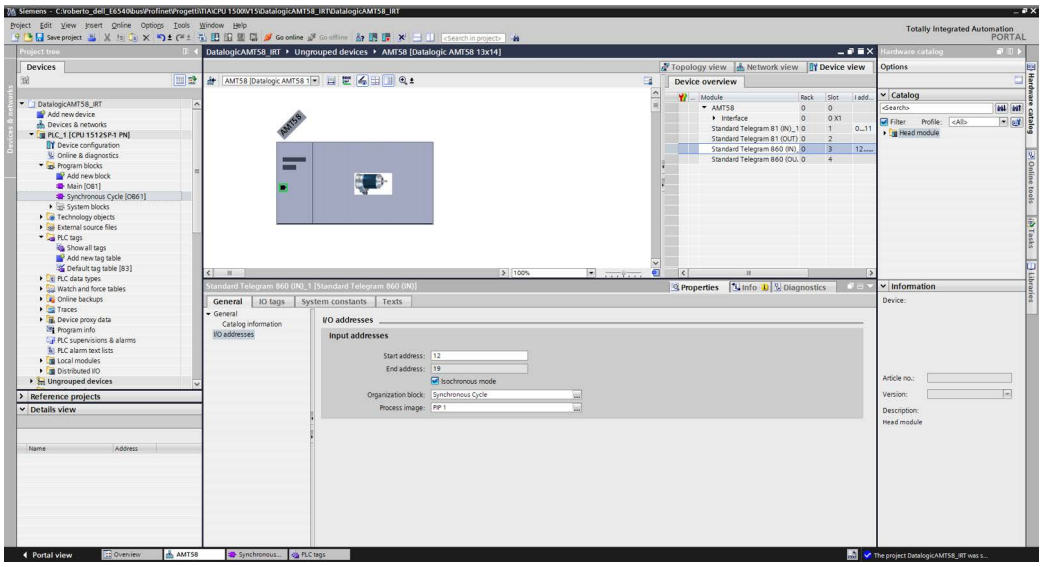

Figure 8. Telegram 860 OUT

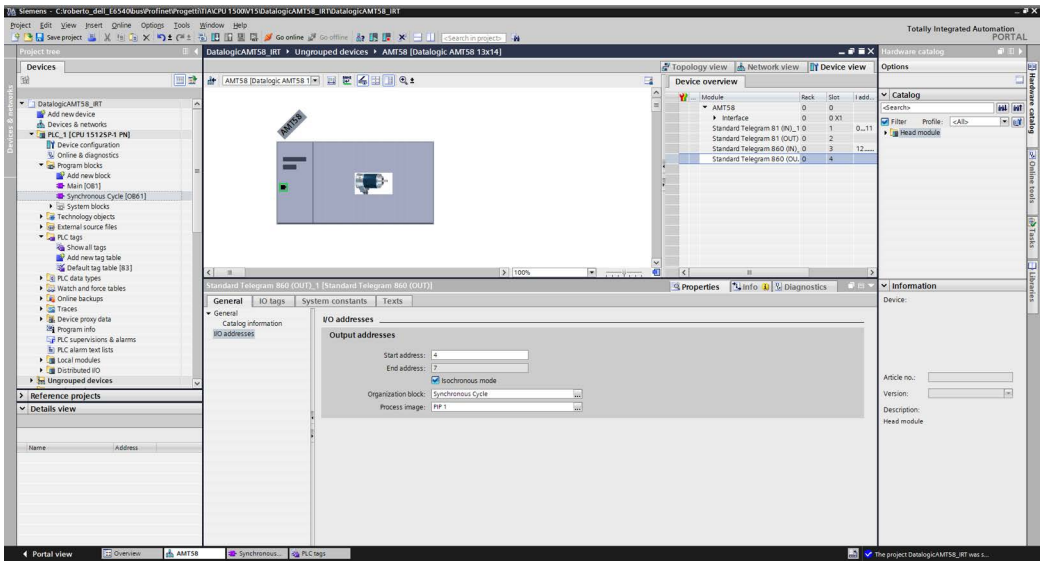

6. Finally transfer your project.

OB61

CAUTION

Use of OBs requires both in-depth skills and specific expertise in TIA PORTAL programming environment. For detailed information please consult the TIA PORTAL Programmer's handbook and documentation.

Organization blocks (OBs) form the interface between the CPU operating system and the user program. The order in which the user program is executed is defined in the organization blocks.

The synchronization with the user program is maintained through the clocked interrupt OB61. OB61 is a synchronous cycle interrupt; in other words it is an isochronous event that is called with the start of every PROFINET cycle. It is synchronous with the Profinet send clock.

PIP (PROCESS IMAGE PARTITION)

CAUTION

Use of PIPs requires both in-depth skills and specific expertise in TIA PORTAL programming environment. For detailed information please consult the TI PORTAL Programmer's handbook and documentation.

Consistency

PIPs (Process Image Partitions) are used to update the distributed IO device synchronously with the constant bus cycle time clock.

Compared with direct access to the input/output modules, the main advantage of accessing the process image is that the CPU has a consistent image of the process signals for the duration of one program cycle. If a signal state on an input module changes while the program is being executed, the signal state in the process image is retained until the process image is updated again in the next cycle. The process of repeatedly scanning an input signal within a user program ensures that consistent input information is always available. You define process image partition with TIA PORTAL when you assign addresses (which input/output addresses of the modules are listed in which process-image partition). The process image partition is updated by the user with SFCs.

Figure 9. Process Image Partition

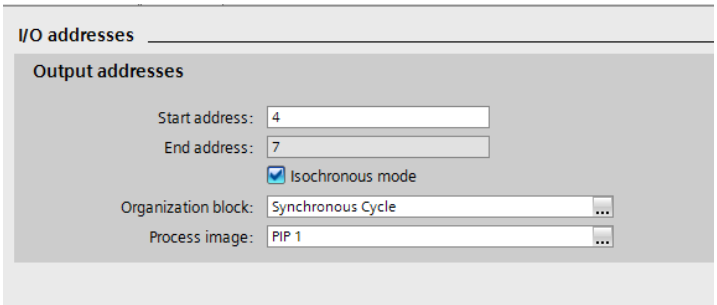

CHAPTER 11

ENCODER REPLACEMENT USING LLDP

LLDP (Link Layer Discovery Protocol) is a Layer 2 protocol that is used to detect the closest neighbours in the network. It enables a device to send information about itself and to save information received from neighbouring devices, i.e. it provides the option of communicating data between neighbouring devices (e.g. device name, port, MAC address). This information allows a network management system to determine the network topology. The protocol is formally referred to by the IEEE as Station and Media Access Control Connectivity Discovery specified in standards document IEEE 802.1AB.

Among the main uses, LLDP allows to replace a device of the Profinet network.

The partner ports before and behind the replaced device save the relevant information so that no additional configuration is necessary. The flag **Support device replacement without exchangeable medium** must be activated in the Controller.

When you need to activate / deactivate the **Support device replacement without exchangeable medium** function in the IO controller, proceed as follows:

1. In the Device or Network view of TIA Portal select the PROFINET interface of the corresponding IO controller. The properties of the PROFINET interface are displayed in the inspector window.

2. In the Properties of the PROFINET interface, under **Advanced options** > **Interface options** enable **Support device replacement without exchangeable medium**.

Figure 1. Link Layer Discovery Protocol (LLDP)

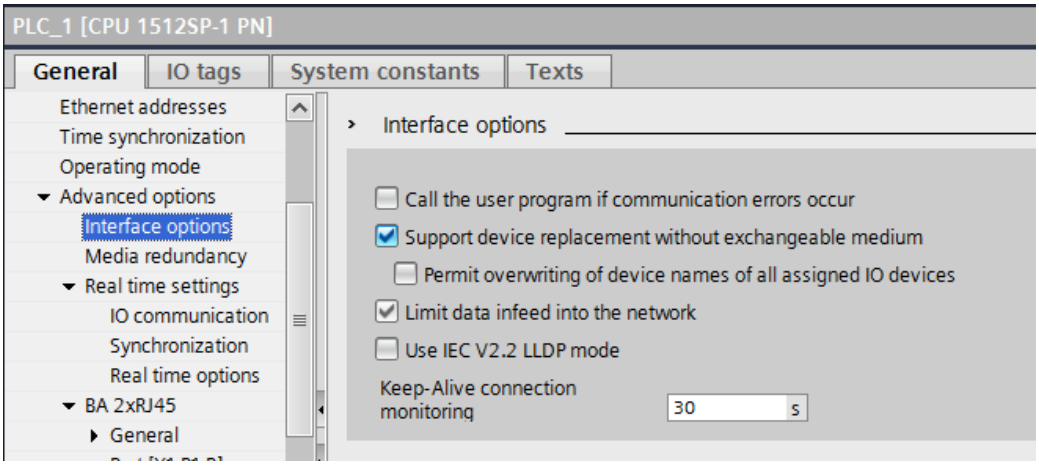

NOTE

When you replace a device, make sure that the PROFINET cable is then inserted into the correct port as it is configured in TIA Portal. Otherwise, the system will not run.

CHAPTER 12
MEDIA REDUNDANCY PROTOCOL (MRP)

MRP (Media Redundancy Protocol) is a redundancy protocol supported by all Profinet capable devices that will allow a network to be configured in a ring topology. It is standardized by the International Electrotechnical Commission as IEC 62439-2. It is suitable to most Industrial Ethernet applications. Since Profinet is an open standard, this means that MRP is a manufacturer independent protocol and can be used to form a ring with devices from different manufacturers (so long as all devices are fully IEC 62439-2 compliant).

It allows rings of Ethernet devices to overcome any single failure with recovery time much faster than achievable with Spanning Tree Protocol. In other words, it allows to prevent interruptions in an automation machine caused by a defect of a cable or a device. In an MRP ring, the ring manager is named **Media Redundancy Manager (MRM)**, while ring clients are named **Media Redundancy Clients (MRCs)**. Any MRC is connected to the MRM via two ways of communication. During normal work status (network without failure in the ring) the telegrams will only be sent via one way of communication; the second way of communication will be blocked by the MRM. If a failure in the ring occurs (for instance because of a cable break), the second way of communication will be opened by the MRM.

Requirements are:

- all devices in the ring support MRP;
- you have complied with the rules for topology.

For complete information on the MRP please refer to the documentation provided by Siemens.

Figure 1. Example of a ring topology with the MRP media redundancy

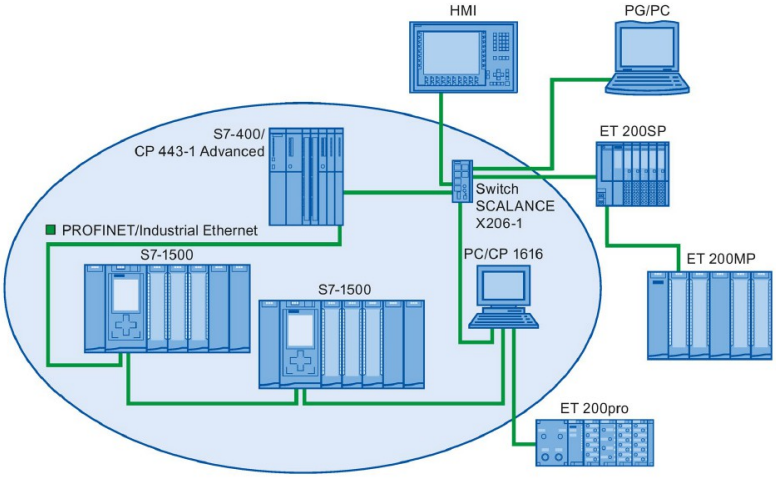

SETTING MRP ROLES

Within an MRP ring, each device must be assigned a role. One device will be the MRP Manager (MRM) and will be responsible for sending out test frames to detect for a network failure and for blocking network traffic on one port (except for the test frames) to prevent a network loop. The other devices must be assigned a Client role (MRC) so they know how to handle the test frames.

So let's set our PLC as the manager.

Go to the Device view for the PLC and look at the properties of the network interface. Under Advanced Options, look for Media redundancy. Here you can select the role for the device: set the Manager (Auto) option in the Media redundancy role drop-down menu.

Figure 2. Setting the PLC as the MRM

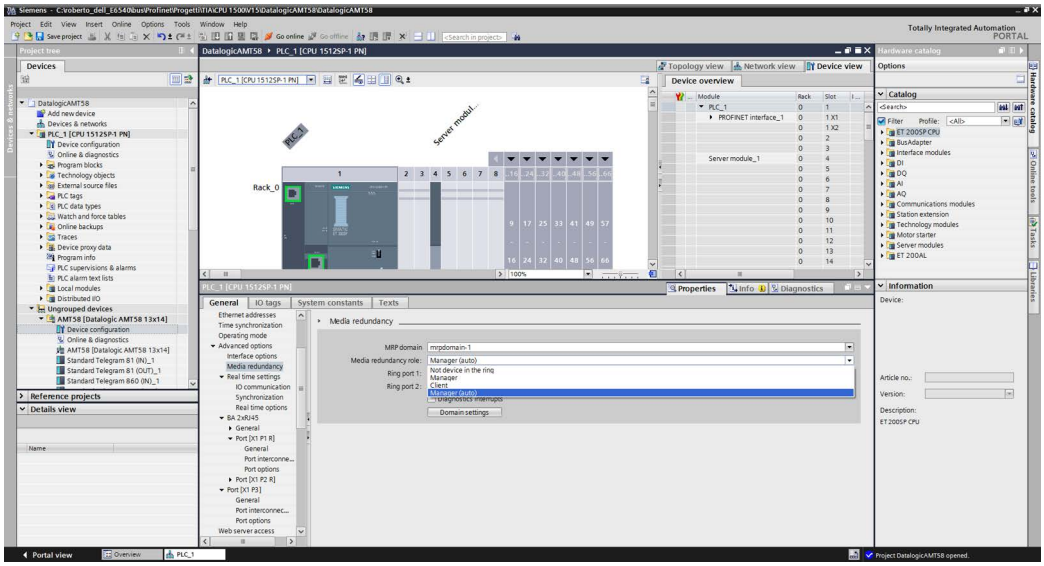

We do the same for the encoder: it must be set as a client.

Go to the Device view for the encoder and look at the properties of the network interface. Under Advanced Options, look for Media redundancy. Here you can select the role for the encoder: set the Client option in the Media redundancy role drop-down menu.

Figure 3. Setting the encoder as the MRC

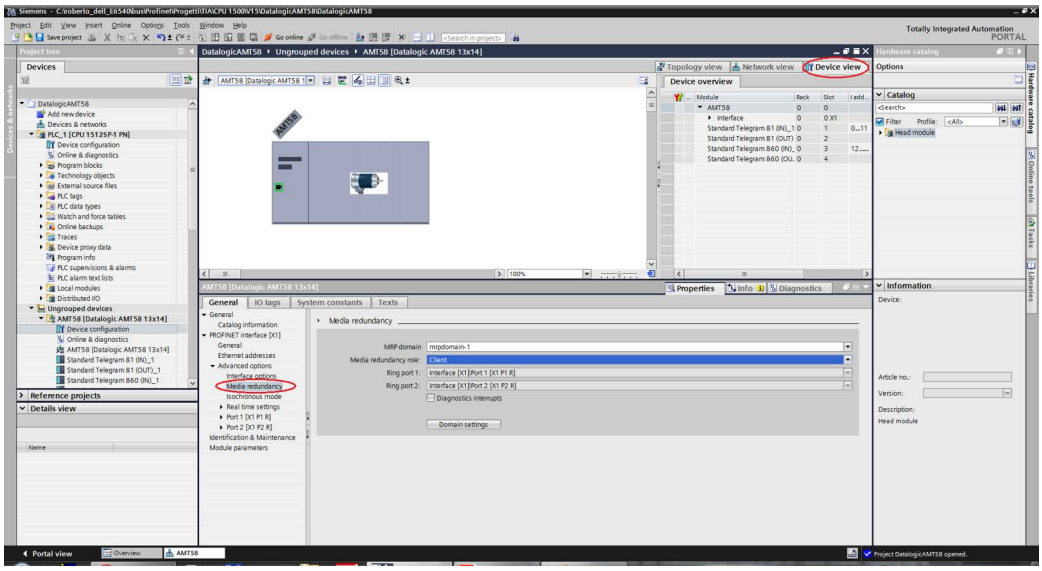

CONFIGURING THE NETWORK TOPOLOGY

To configure the network topology proceed as follows.

Navigate to the Topology view tab of the Devices and Networks view.

Configure the topology to create a ring by connecting the ports, for instance as shown in the Figure. Of course you must comply with the rules for topology as required by your own network. For detailed information please refer to specific documentation.

Figure 4. Configuring the network topology

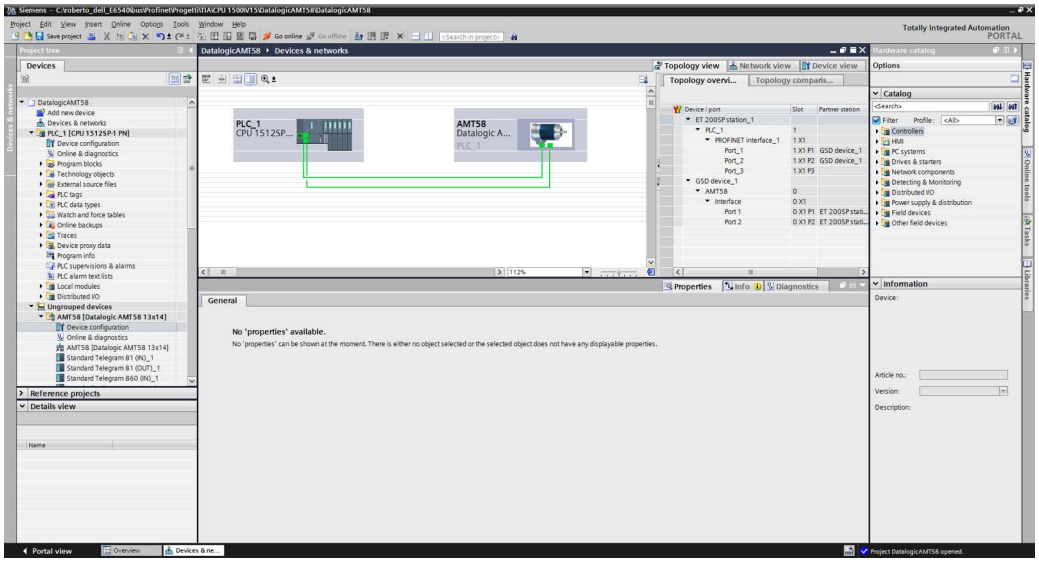

INTERCONNECTING THE PORTS IN THE INSPECTOR WINDOW

To interconnect the ports, follow these steps:

1. In the Device view tab or Network view tab, select the PROFINET device or PROFINET interface.
2. In the Table Area of the Hardware and network editor select the port which you want to configure (Port 1 and Port 2).
3. In the Inspector window, navigate to the Properties tab and select Port interconnection in the navigation area.
4. In the Local port section, you can find the settings at the local port.
5. In the Partner port area, select the drop-down list for Partner port in order to display the available partner ports and make a selection.

Figure 5. Interconnecting port 1

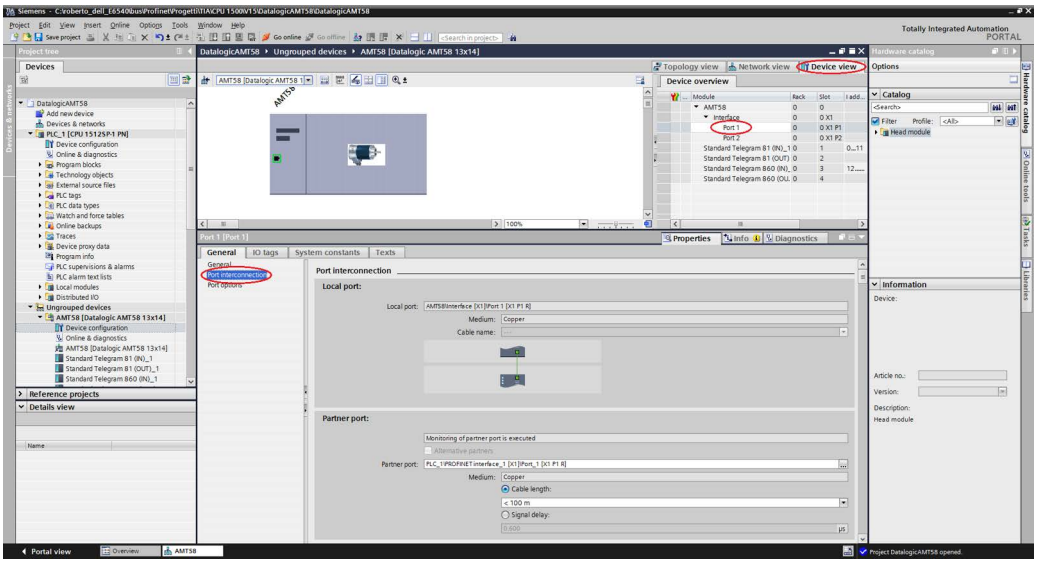

Figure 6. Interconnecting port 2

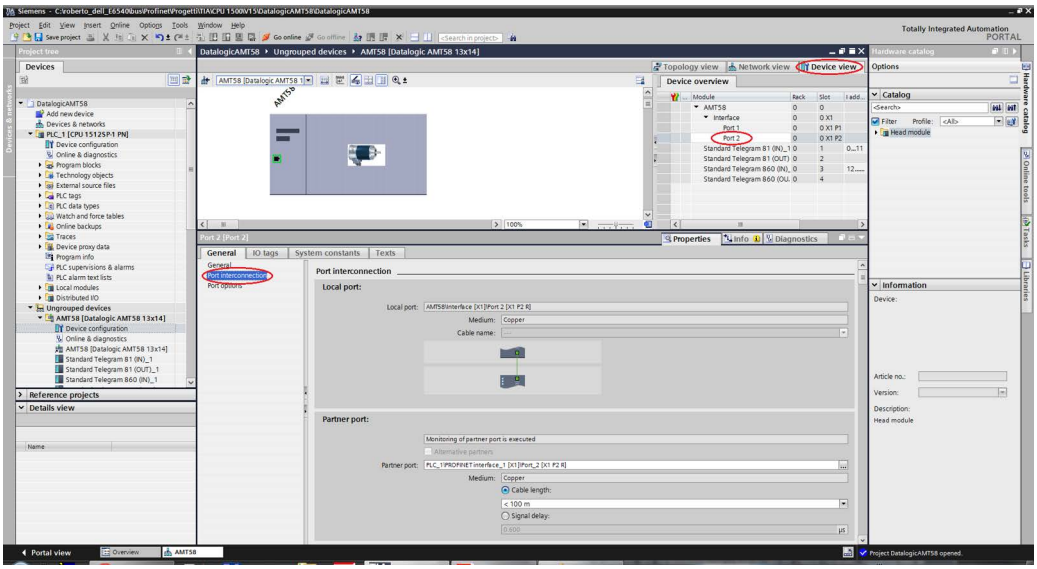

CHAPTER 13
ENCODER STATE MACHINE

Figure 1. Encoder state machine

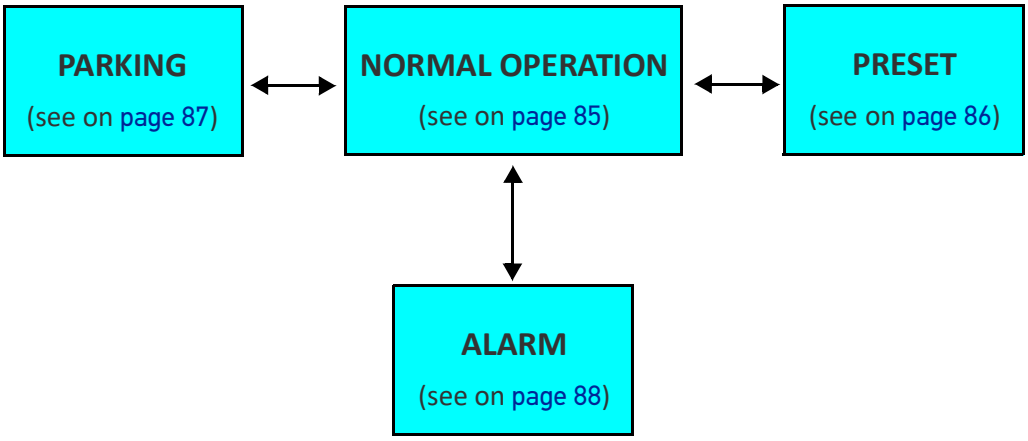

NORMAL OPERATION DIAGRAM

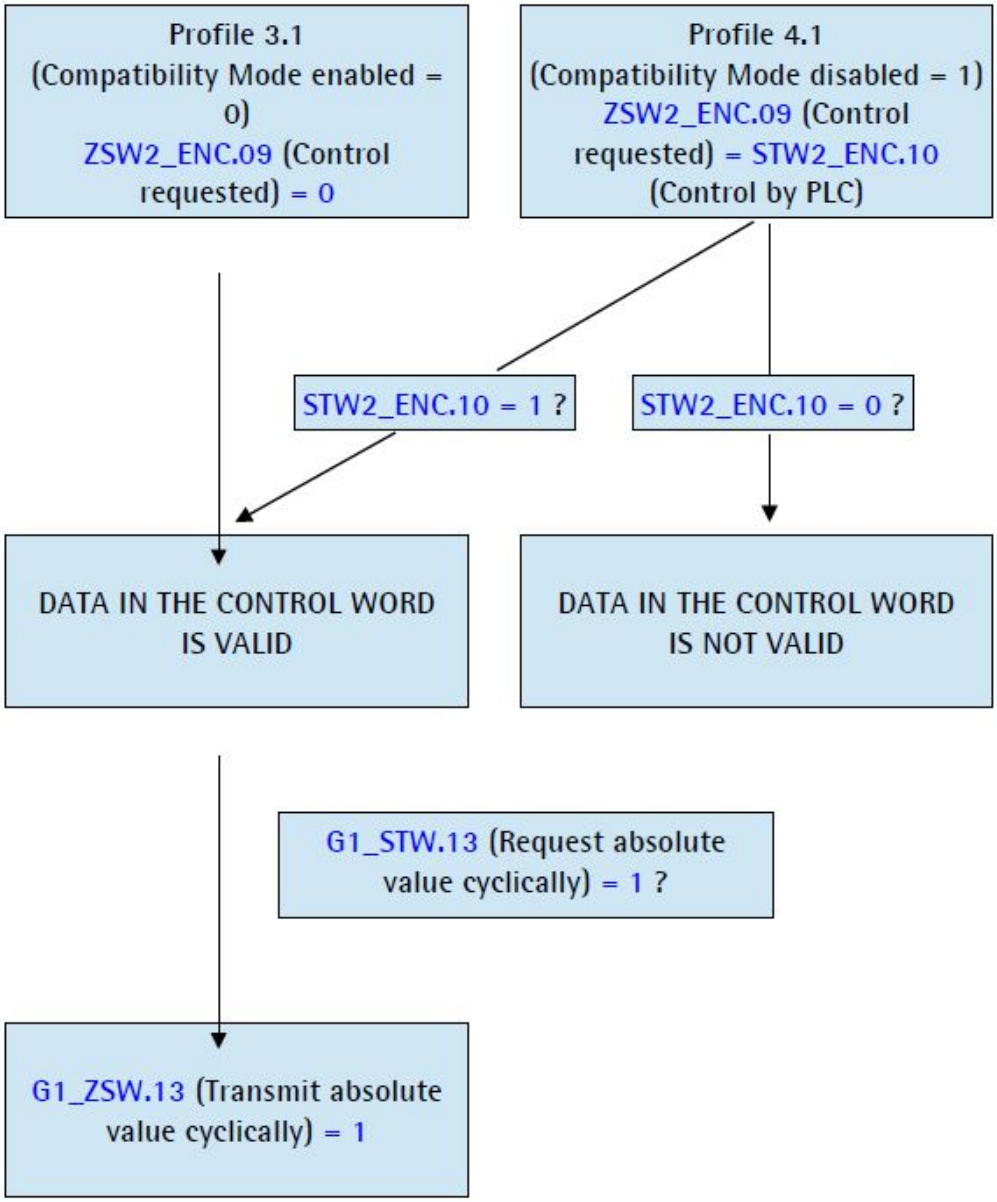

PRESET DIAGRAM

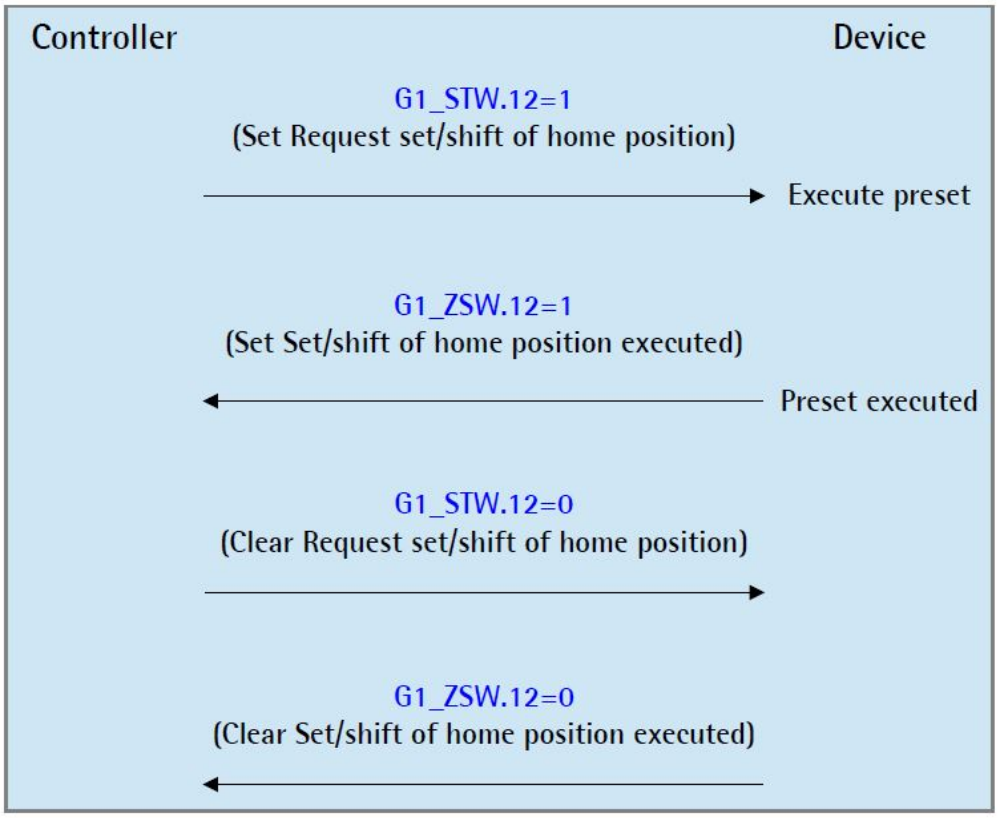

PARKING SENSOR DIAGRAM

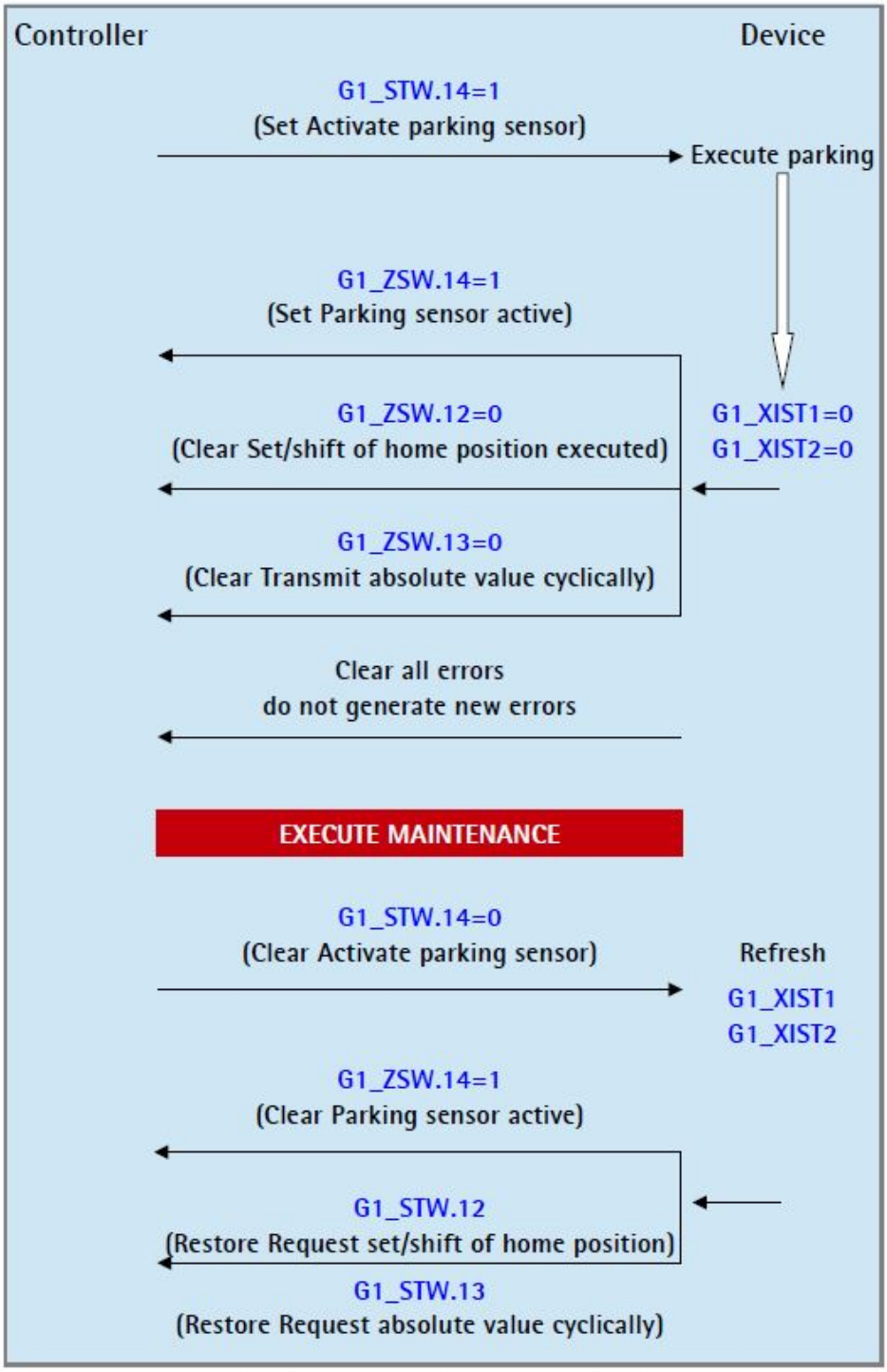

ERROR DIAGRAM

Acknowledgment of acknowledgeable sensor error

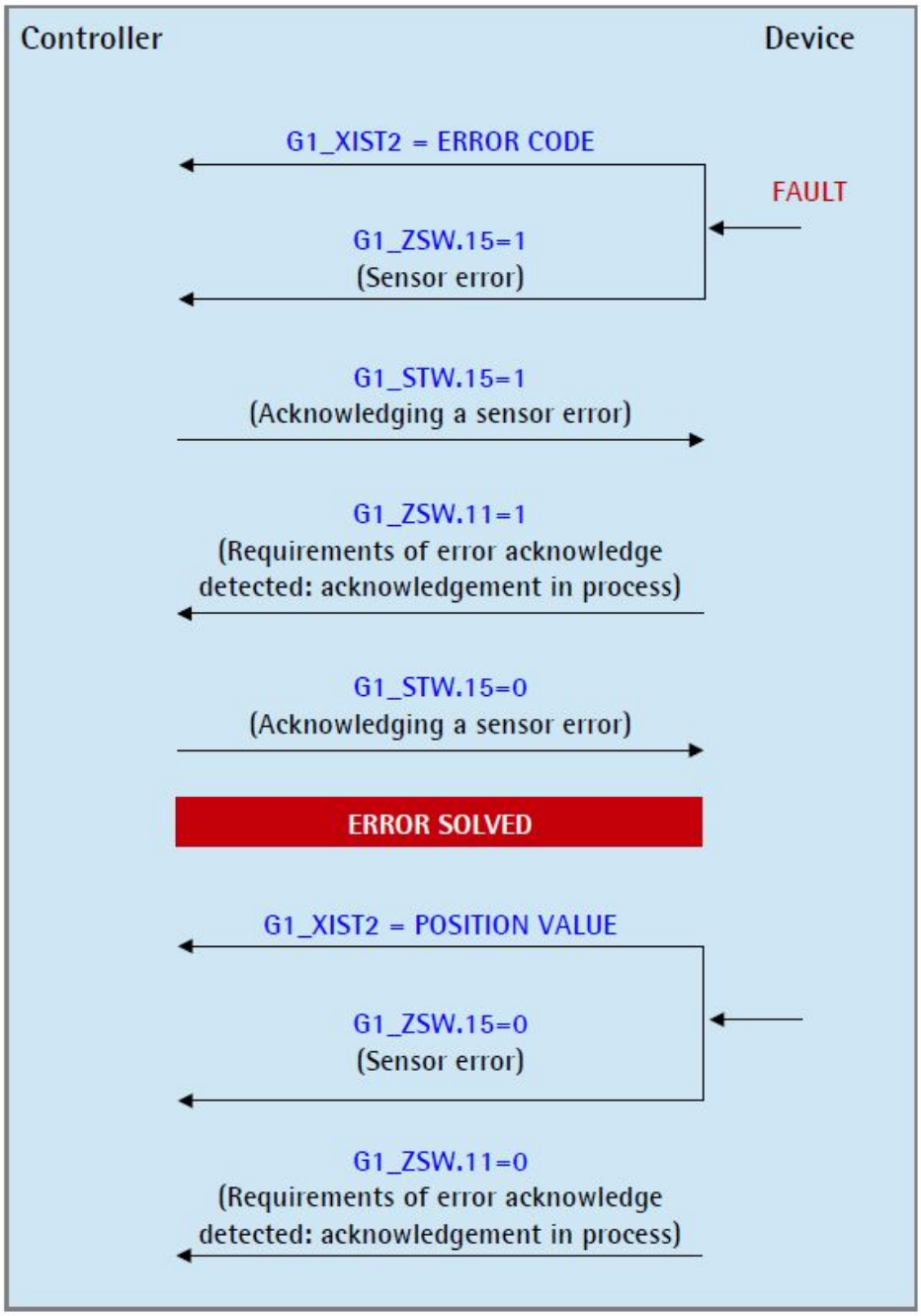

Acknowledgment of not acknowledgeable sensor error

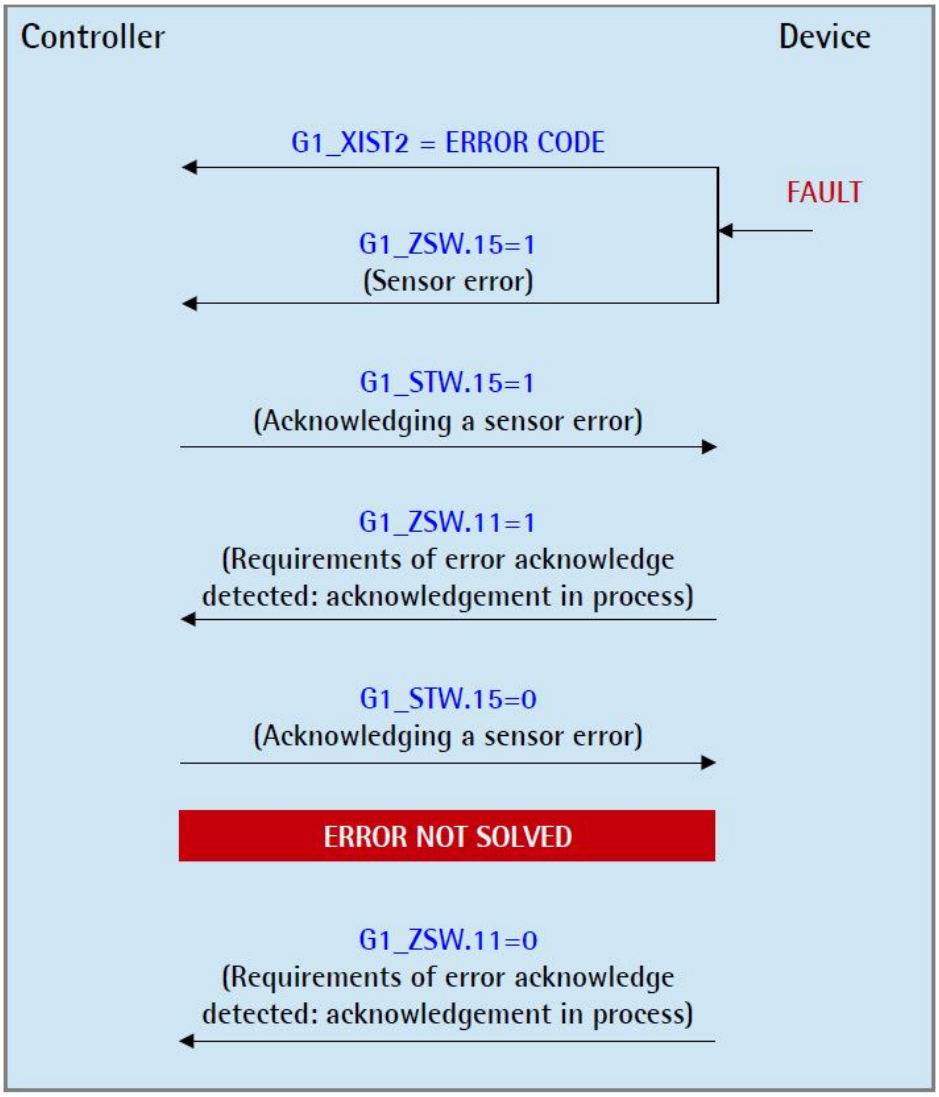

CHAPTER 14
INTEGRATED WEB SERVER

Profinet encoders from Datalogic integrate a web server. This web-based user interface is designed to offer helpful functions and deliver complete information on the device that can be accessed through the Internet.

In particular it allows:

- to display the current position and speed values;
- to display and check the currently set parameters;
- to set the parameters.

The web server can be accessed from any PC running a web browser. Since its only requirement is a HTTP connection between the web browser and the web server running on the device, it is perfectly fitted also for remote access scenarios.

Before opening the Profinet encoder web server please ascertain that the following requirements are fully satisfied:

- the encoder is connected to the network;
- the encoder has valid device name and IP address;
- the PC is connected to the network;
- a web browser (Internet Explorer, Mozilla Firefox, Google Chrome, Opera, ...) is installed in the PC or in the device used for connection.

NOTE

This web server has been tested and verified using the following web browsers:

- **Internet Explorer IE11 version 11.1593.14393.0**
- **Mozilla Firefox version 55.0.3**
- **Google Chrome version 60.0.3112.113**
- **Opera version 47.0.2631.80**

NOTE

Please note that the snapshot look may vary depending on the used web browser. The following snapshots have been taken from Google Chrome.

WEB SERVER HOME PAGE

To open the Profinet encoder web server proceed as follows:

1. type the IP address of the encoder you want to connect to (in the example: 192.168.20.1) in the address bar of your web browser and confirm by pressing ENTER;

Figure 1. Opening the web server

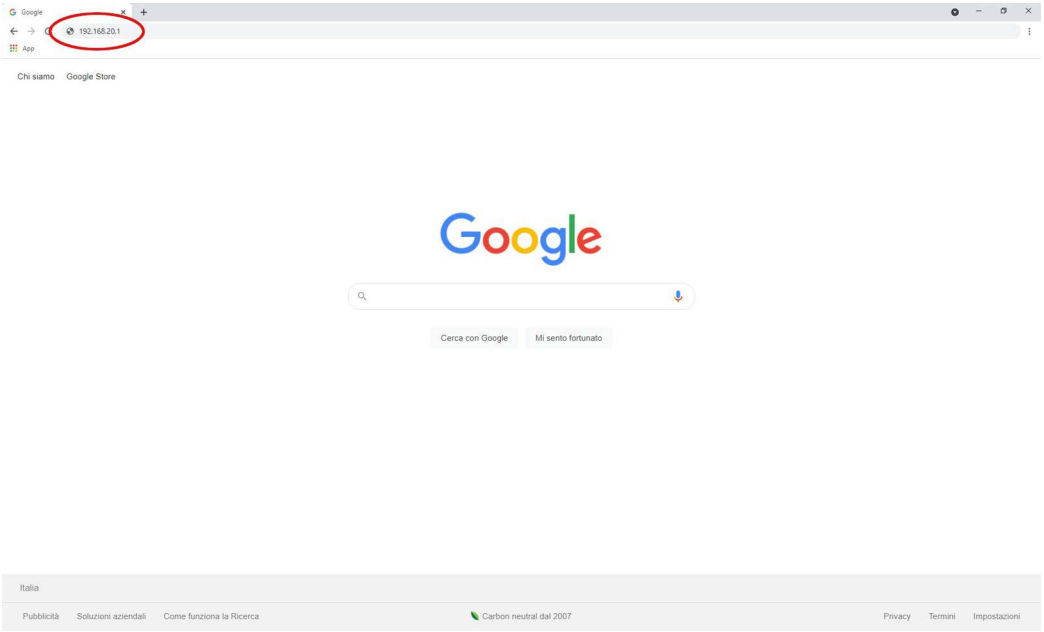

2. as soon as the connection is established, the web server Home page will appear on the screen;

Figure 2. Web server Home page

In the Home page some commands are available in the menu bar.

Press on the Datalogic logo to enter Datalogic web site (www.datalogic.com).

Press the Documentation command to enter the Profinet encoder technical documentation page available on Datalogic web site where specific technical information and documentation concerning the Profinet encoder can be found.

Furthermore, some commands are available in the left navigation bar. All the pages except the **Firmware upgrade** page are freely accessible through the commands in the bar. The **Firmware upgrade** page requires a password.

These commands allow to enter specific pages where information and diagnostics on the connected encoder as well as useful functions can be achieved.

They are described in the following sections.

ENCODER POSITION AND SPEED

Press the Encoder Position-Speed command in the left navigation bar of the Web server Home page to enter the page where the current encoder position and the current encoder speed are displayed.

Figure 3. Encoder position & speed range

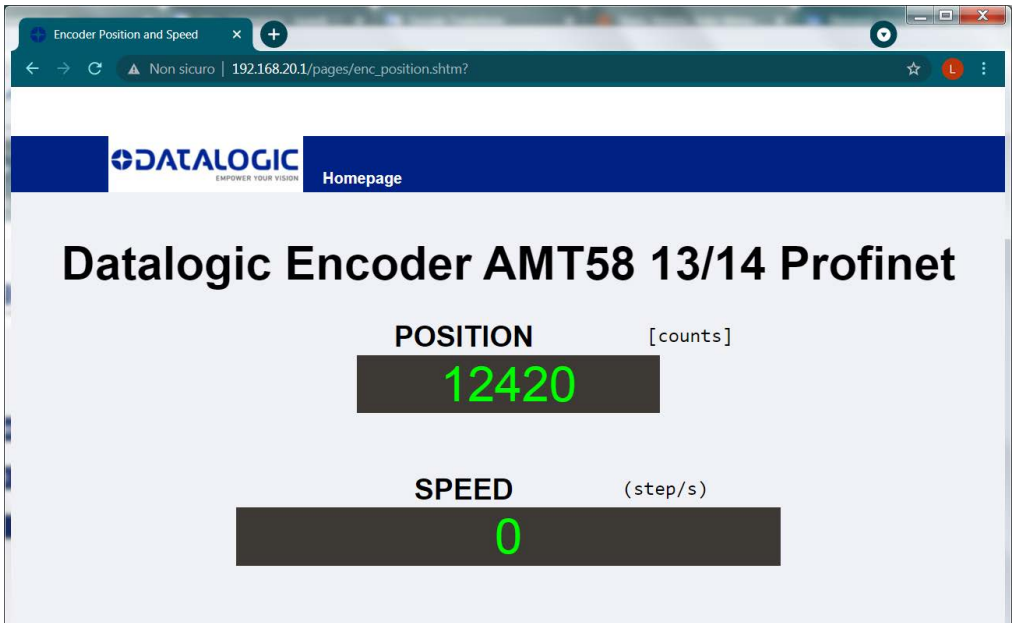

The current encoder position is expressed in counts. For any information refer to "G1_X-IST1" on page 52.

The current speed is expressed according to the setting next the Velocity measuring unit parameter (by default it is expressed in counts per second). For any information refer to "NIST_B" on page 60.

NOTE

The current encoder position and speed values are real-time processed and continuously updated (every 200 ms on the screen).

Press the Homepage command to move back to the Web server Home page.

Specific notes on using Internet Explorer

The following options must be set properly on Internet Explorer in order to get the Encoder position and speed page to be continuously updated.

- Open the Settings menu;
- open the Internet Options property sheet;
- in the General tabbed page, press the Setting button available in the History Browsing section;
- under Check for newer versions of stored pages, click Every time I visit the web-page;
- press the OK button to confirm whenever requested.

ENCODER INFORMATION (PROFINET PARAMETERS)

Press the Encoder Information command in the left navigation bar of the Web server Home page to enter the Encoder Information page. In this page the complete list of the available Profinet parameters is displayed. Indexes are expressed in hexadecimal notation, values are expressed in either decimal notation or string format. The MAC address of the connected encoder is shown under the name of the page.

Figure 4. Encoder information page

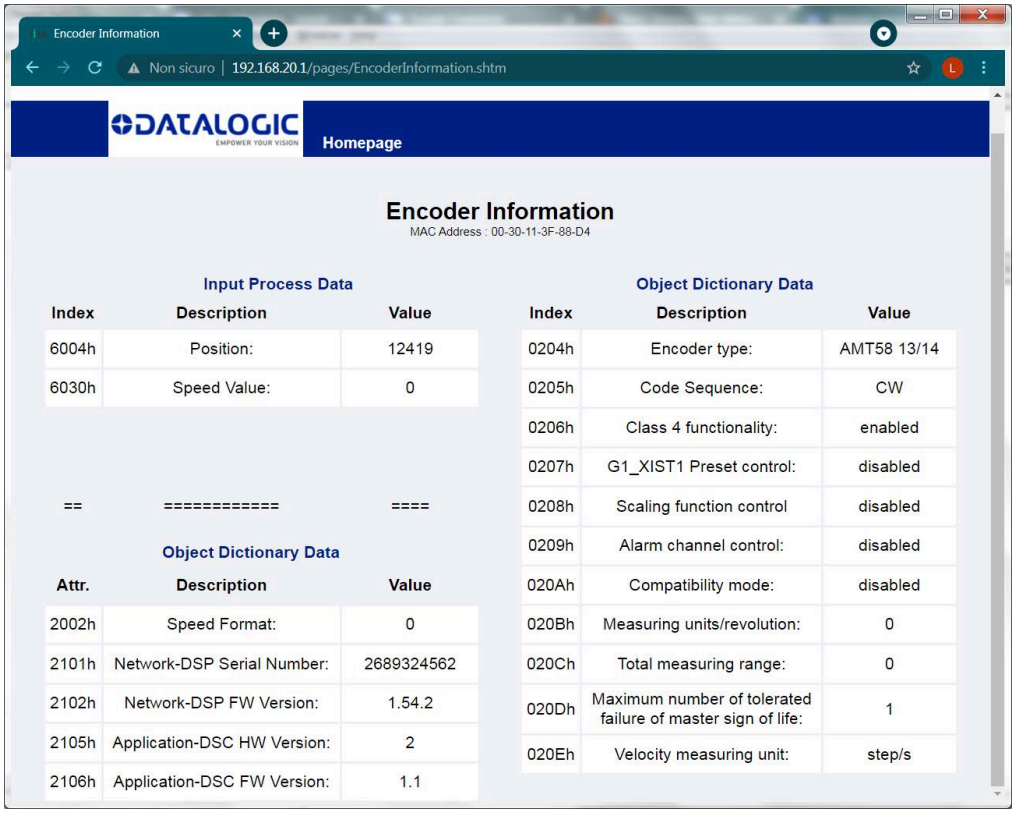

For a complete description of the available encoder parameters please refer to Encoder Parameters, starting on page 62.

NOTE

Please note that the values shown in the Encoder Information page are "frozen" in the moment when the page is displayed. To update the values you must refresh the web page.

NOTE

The parameters in the Encoder Information page cannot be changed. To change the set values please enter the Set Registers page (see "Setting the Parameters" on page 94**).**

Press the Homepage command to move back to the Web server Home page.

SETTING THE PARAMETERS

Press the Set Registers command in the left navigation bar of the Web server Home page to enter the Set Encoder Registers page. In this page the Profinet encoder parameters are displayed and their value can be changed.

For complete information on the encoder parameters please refer to Encoder Parameters, starting on page 62.

Figure 5. Set Encoder Registers page

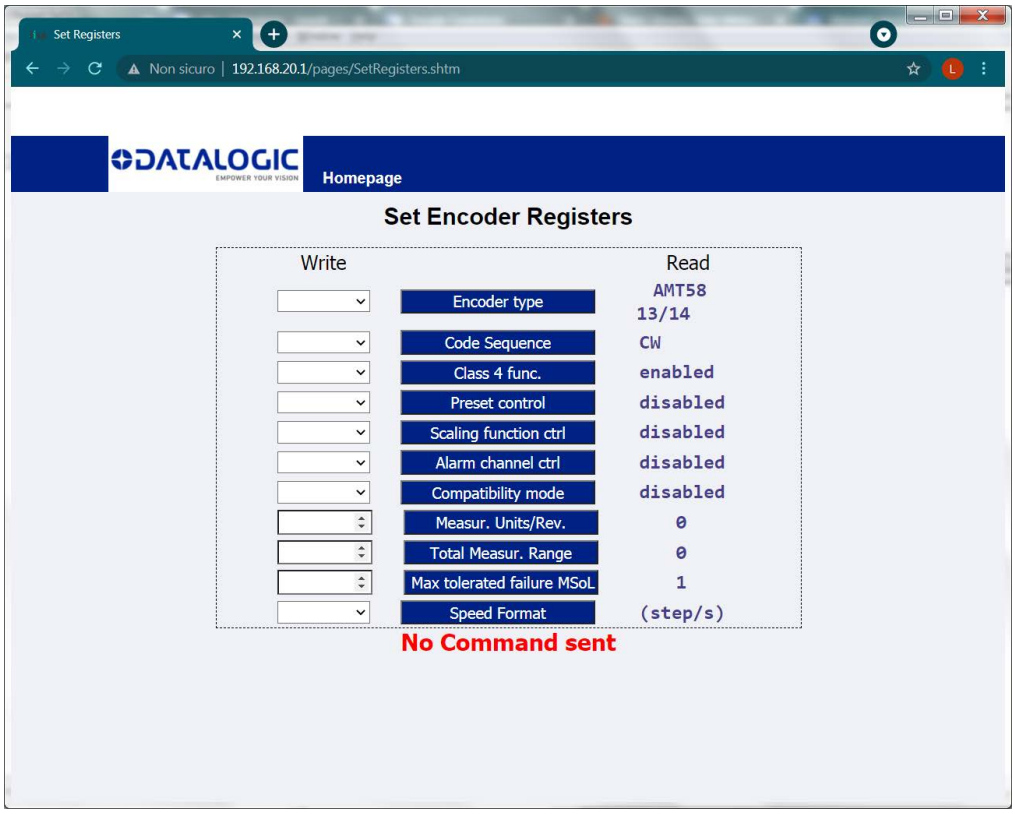

A soon as you press the Set Registers command a warning message (*Are you sure you want to change Registers Values?*) appears on the screen: it warns the operator about the awkwardness of the operation, thus he is required to confirm the procedure before continuing.

Press the OK button to proceed, otherwise press the EXIT button to abort the procedure. The *Set Registers canceled!* message will appear on the screen. Press the OK button to move back to the Web server Home page.

If you confirm the procedure, the Set Encoder Registers page will appear on the screen.

The values that are currently set in the encoder are displayed in the READ column.

To change any value enter a suitable value in the WRITE column next to the desired parameter and then press the button between the boxes to confirm. The values have to be set either in decimal notation or by using the drop-down menu (when available).

For complete information on the available parameters please refer to Encoder Parameters, starting on page 62.

Example

The Code sequence parameter is currently set to “CW” (see the READ box in the first line of the Figure 52 above). To change the set value enter a suitable value in the corresponding WRITE box of the same line through the drop-down menu and then press the CODE SEQUENCE button to confirm.

Example

The Measuring units / Revolution parameter is currently set to “8192” (see the READ box in the third last line of the Figure 52 above). To change the set value enter a suitable value in the corresponding WRITE box of the same line and then press the MEASUR. UNITS/REV. button to confirm.

NOTE

Please note that, after pressing the button between the boxes, the set value is instantly saved in a permanent way in the parameter.

NOTE

At each confirmation of the set parameters, a message will appear under the buttons (see the No Command sent message). It informs whether the operation has been accomplished properly or an error occurred (for example Command was set correctly if everything went well; or Command Error! if something went wrong).

Press the Homepage command to move back to the Web server Home page.

SETTING AND ACTIVATING THE PRESET

Press the Set Preset Value command in the left navigation bar of the Web server Home page to enter the Set Encoder Preset page and set/activate a Preset value. If you need to set the preset occasionally, we suggest using the web server. For complete information on the preset function please refer to the G1_XIST1_PRESET_VALUE signal on page 80.

To set and execute the preset via web server proceed as follows:

- press the **Set preset** command in the left navigation bar of the Web server **Home** page and enter the **Set Encoder Preset** page;
- as soon as you press the **Set Preset Value** command a warning message (**Are you sure you want to change Preset Value?**) appears on the screen: it warns the operator about the awkwardness of the operation, thus he is required to confirm the procedure before continuing;
- press the **OK** button to proceed;
- otherwise press the **EXIT** button to abort the procedure. The **Set Preset cancelled!** message will appear on the screen. Press the **OK** button to move back to the Web server **Home** page;
- if you confirm the procedure, the **Set Encoder Preset** page will appear on the screen;

Figure 6. Set Encoder Preset page

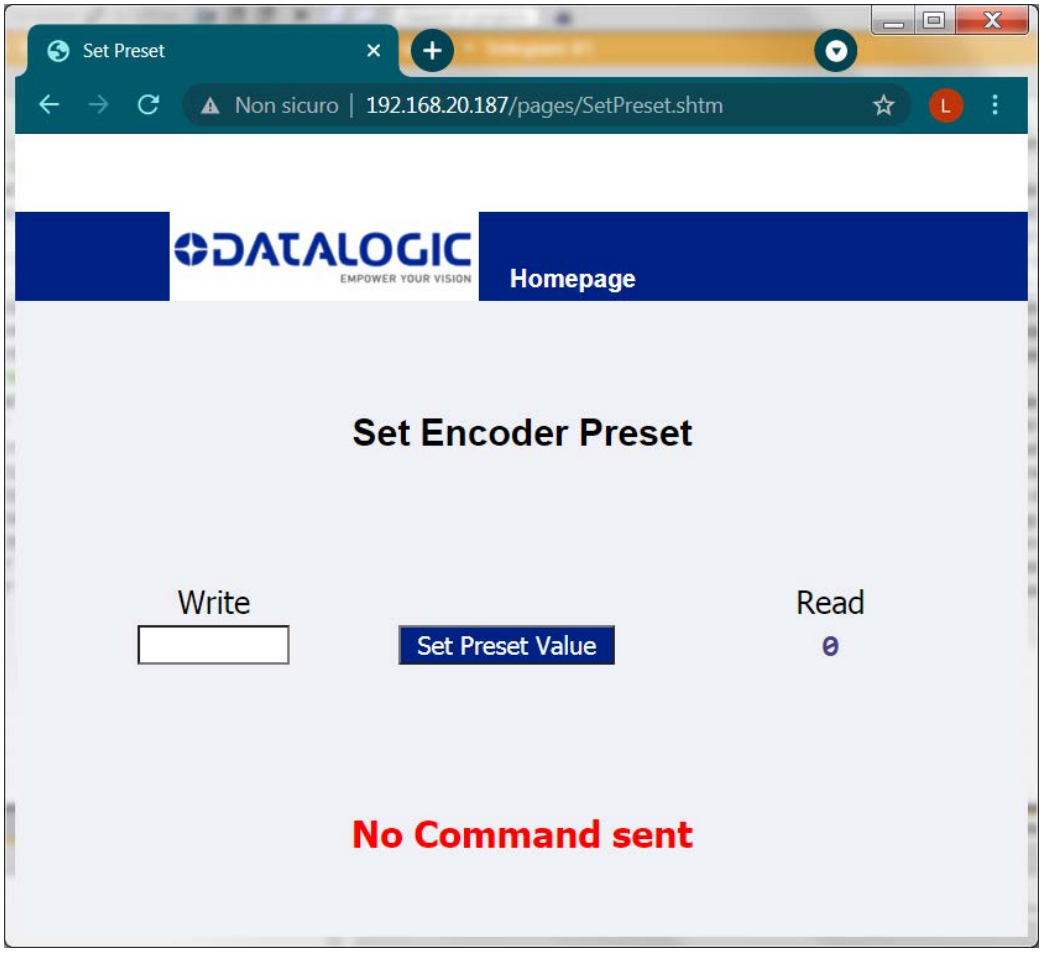

- the Preset value that is currently set in the encoder (see "G1_XIST1_PRESET_VALUE" on page 54) will be displayed in the **READ** box;

- to change the Preset enter a suitable value in the **WRITE** box and then press the **Set Preset Value** button to confirm. The value has to be set in decimal notation. The preset value is set and activated at the same time.

Figure 7. Setting the preset value

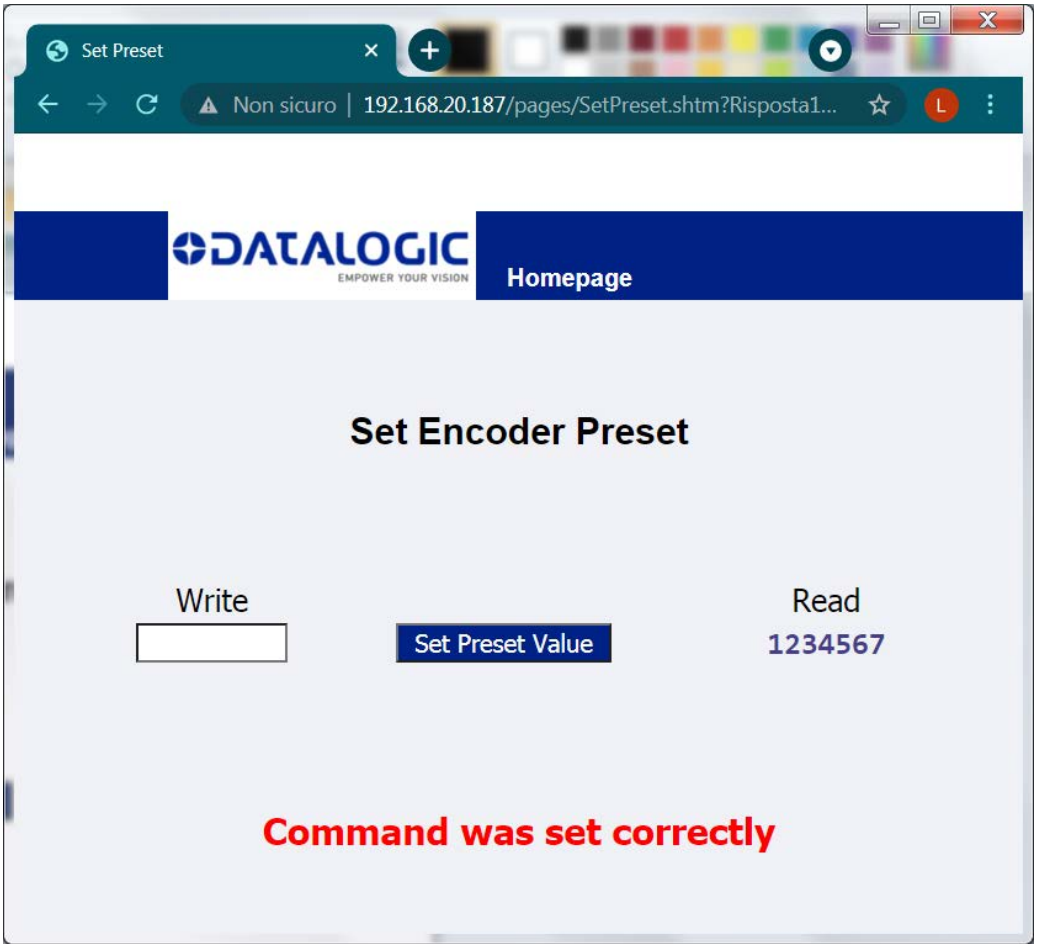

CAUTION

The preset value is set and activated for the position of the encoder in the moment when the preset value is transmitted. It is activated as soon as the value is confirmed by pressing the Set Preset Value button. We suggest activating the preset value when the encoder is in stop.

NOTE

At each confirmation of the set parameters, a message will appear under the buttons (see the No Command sent message). It informs whether the operation has been accomplished properly or an error occurred (for example Command was set correctly if everything went well; or Command Error! if something went wrong).

Press the Homepage command to move back to the Web server Home page.

FIRMWARE UPGRADE

Press the Upgrade Firmware command in the left navigation bar of the Web server Home page to enter the Firmware Upgrade page. Please note that this is a password protected page, thus a password is requested to access the page.

CAUTION

Firmware upgrading process has to be accomplished by skilled and competent personnel. It is mandatory to perform the upgrade according to the instructions provided in this section.

Before installation always ascertain that the firmware program is compatible with the hardware and software of the device. Furthermore, never turn off power during flash upgrade. In case of flash upgrade error, the program is lost irreversibly (there is not a bootloader) and the device must be sent back to Datalogic for restoring.

This operation allows to upgrade the unit firmware by downloading upgrading data to the flash memory.

Firmware is a software program which controls the functions and operation of a device; the firmware program, sometimes referred to as “user program”, is stored in the flash memory integrated inside the unit. These encoders are designed so that the firmware can be easily updated by the user himself. This allows Datalogic to make new improved firmware programs available during the lifetime of the product.

Typical reasons for the release of new firmware programs are the necessity to make corrections, improve and even add new functionalities to the device.

The firmware upgrading program consists of a single file having .BIN extension. It is released by Datalogic.

If the latest firmware version is already installed in the unit, you do not need to proceed with any new firmware installation. The firmware version currently installed can be read next to the Application-DSC FW Version item in the Encoder Information page after connection to the web server (see "Encoder Information (Profinet Parameters)" on page 93).

NOTE

If you are not confident that you can perform the update successfully, please contact Datalogic Technical Support.

Before proceeding with the firmware upgrade please ascertain that the following requirements are fully satisfied:

- the encoder is connected to the Ethernet network;
- the encoder has valid device name and IP address;
- the PC is connected both to the network and the IO controller;
- a web browser (Internet Explorer, Mozilla Firefox, Google Chrome, Opera, ...) is installed in the PC or device used for connection;
- you have the SW_ETH_REVX_Y.EXE executable file;
- you have the .BIN file for firmware upgrade.

To upgrade the firmware program please proceed as follows:

1. press the **Upgrade Firmware** command in the left navigation bar of the Web server Home page to enter the **Firmware Upgrade** page;

2. as soon as you press the **Upgrade Firmware** command a warning message (**Are you sure you want to update the flash?**) appears on the screen: it warns the operator about the awkwardness of the operation, thus he is required to confirm the procedure before continuing;

3. press the **OK** button to proceed, otherwise press the **EXIT** button to abort the procedure. The **Firmware upgrade canceled!** message will appear on the screen. Press the **OK** button to move back to the Web server Home page;

4. if you confirm the procedure, the **Firmware Upgrad**e page will appear on the screen: the operator is requested to submit a password before starting the firmware upgrade procedure;

Figure 8. Firmware Upgrade page

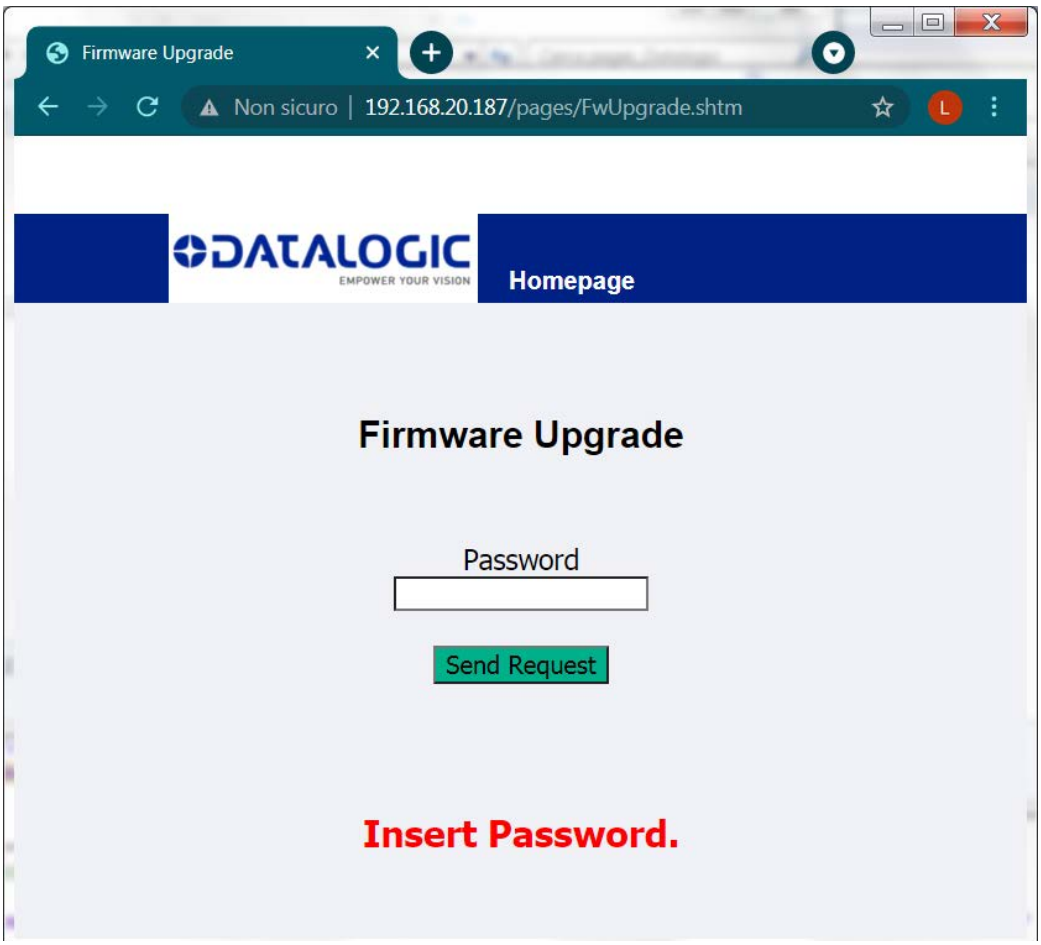

5. in the **Password** text box type the password **0850** and then press the **Send Request** button;

6. if the password you typed is wrong, the following warning message will appear on the screen: **THE PASSWORD INSERTED IS INCORRECT. PLEASE RETRY!**. Please retype the correct password and confirm;

7. if the password you typed is correct, the following message will appear on the screen: **THE PASSWORD INSERTED IS CORRECT. THE WEB SERVER OF THE ENCODER IS STOPPED. NOW LAUNCH THE PROGRAM SW_ETH_REVX_Y.EXE**;

8. the encoder is now ready to accept the firmware program: the web server is stopped and the communication with the encoder through the web browser is interrupted; if you need to exit the procedure and restore the communication you must switch the encoder off and then on again;

9. now you must launch the SW_ETH_REVX_Y.EXE executable file provided by Datalogic to continue with the procedure; X and Y indicate the version of the firmware upgrading program: REV1_0 is the version 1.0;

10. launch the SW_ETH_REVX_Y.EXE executable file. The following page will appear:

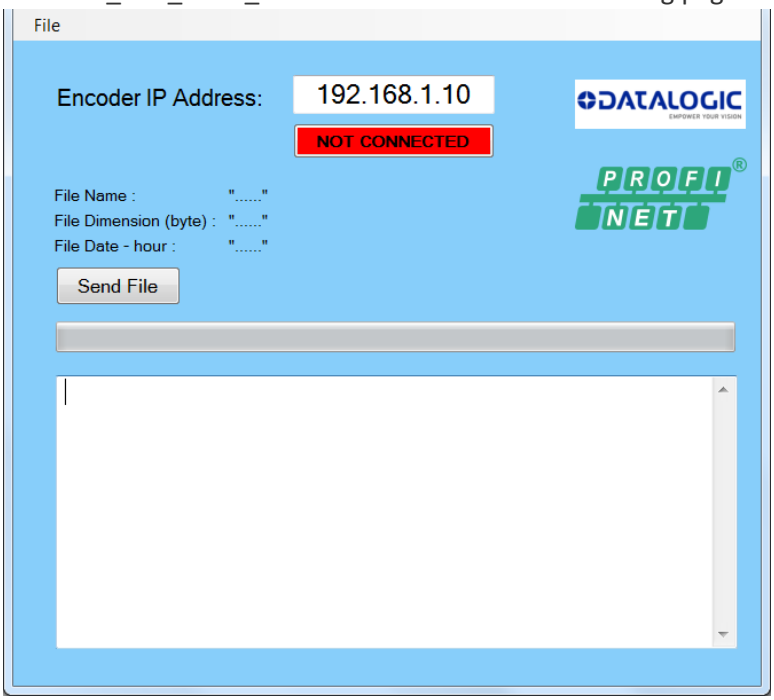

11. type the IP address of the encoder in the **Remote IP Address** box;

12. press the **FILE** command and then the **OPEN** command in the menu bar; once you press the **OPEN** command the **OPEN** dialog box appears on the screen: open the folder where the firmware upgrading .BIN file released by Datalogic is located, select the file and confirm. Hx in the file name shows the hardware version of the PCB; Sx shows the software version of the firmware upgrading file.

13. some properties of the selected file are shown next to the relevant labels in the page: **File Name**, **File Dimension (byte)**, **File Date - hour**. Please check the file properties and ascertain that you are installing the correct upgrade file;

CAUTION

Before installation always ascertain that the firmware program is compatible with the hardware and software of the device.

Never turn the power supply off during the flash upgrade operation.

14. press the Send File button to start the firmware upgrade process;

15. a download progress bar as well as additional information are shown in the page while upgrading the firmware;

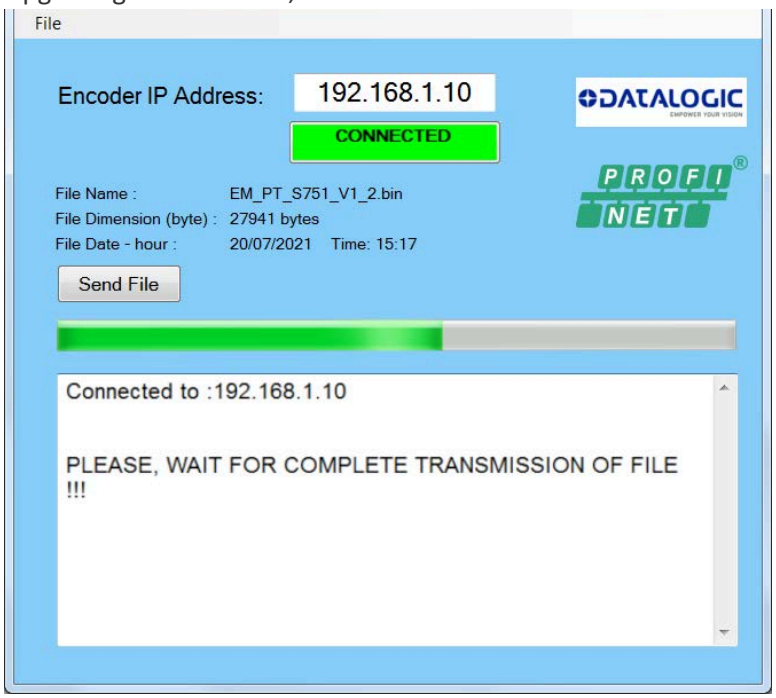

16. as soon as the operation is carried out successfully, the FILE SENT CORRECTLY message appears on the screen;

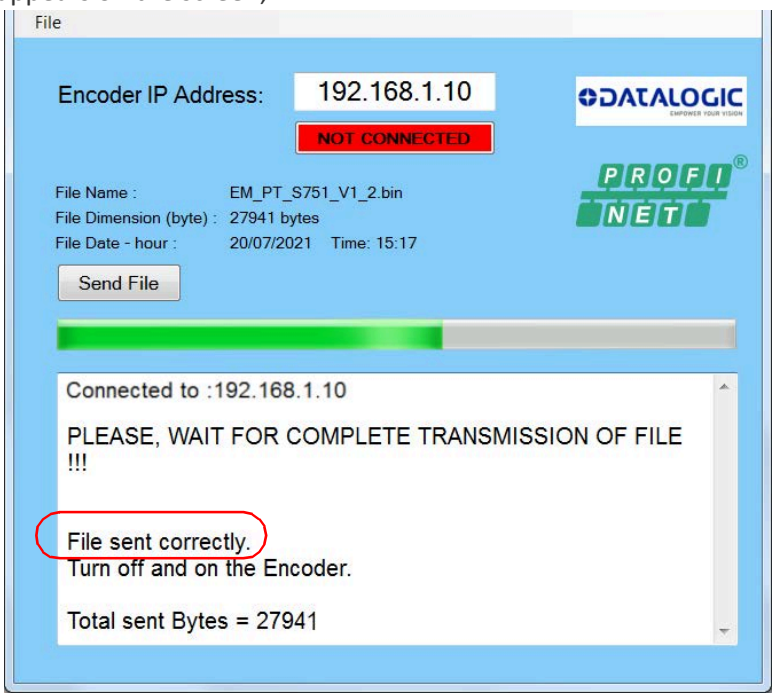

17. now you are required to turn the encoder power supply off and then on. Close the program;

18. turn the encoder power supply off and then on to complete the operation.

NOTE

While downloading the firmware upgrading program, unexpected conditions may arise which could lead to a failure of the installation process. When such a matter occurs, the download process cannot be carried out successfully and thus the operation is aborted; error messages are displayed. In case of flash upgrade error, please switch the encoder off and then on again and retry the operation.

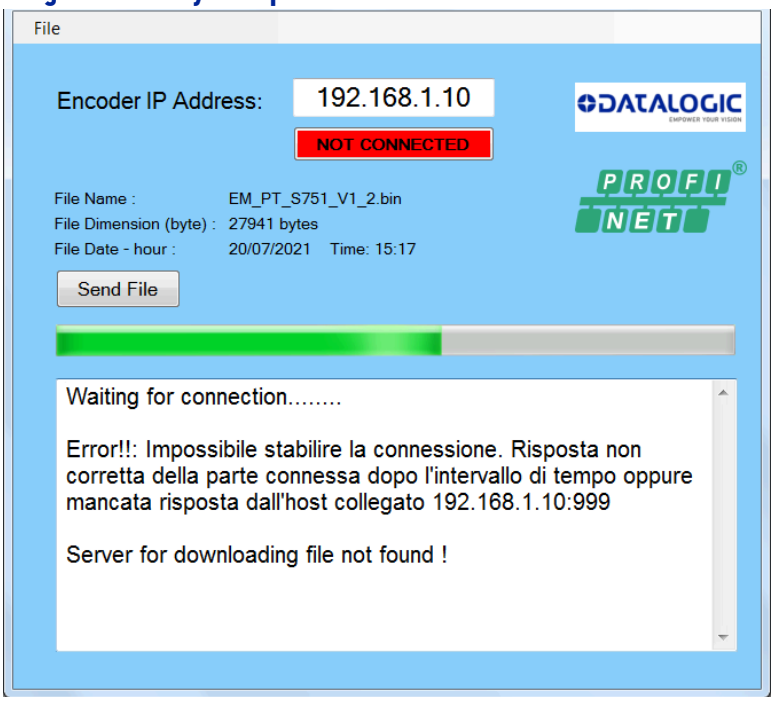

Press the **Homepage** command to move back to the Web server **Home** page.

CHAPTER 15
DEFAULT PARAMETER LIST

PARAMETERS LIST	DEFAULT VALUE
Type of encoder	0: AMT58 multiturn 13/14
Code sequence	0
Class 4 functionality	1
G1_XIST1 Preset control	0
Scaling function control	0
Alarm channel control	0
Compatibility Mode	1
Measuring units / Revolution	8.192
Total measuring range	134.217.728
Maximum tolerated failures of Master Sign-Of-Life	1
Velocity measuring unit	0

© 2014-2021 Datalogic S.p.A. and /or its affiliates • All rights reserved • Without limiting the rights under copyright, no part of this documentation may be reproduced, stored in or introduced into a retrieval system, or transmitted in any form or by any means, or for any purpose, without the express written permission of Datalogic S.p.A. and/or its affiliates • Datalogic and the Datalogic logo are registered trademarks of Datalogic S.p.A. in many countries, including the U.S. and the E.U.

DATALOGIC

www.datalogic.com

Datalogic S.r.l.
Via S. Vitalino, 13 | 40012 Calderara di Reno | Bologna - Italy
Tel. +39 051 3147011 | Fax +39 051 3147205

821007850 (Rev C) November 2021

DATALOGIC

Absolute Encoders

AMT58...16x14 CB

CANopen

Ds406 - Device Profile for Encoders

Instruction Manual

Datalogic S.r.l.
Via S. Vitalino 13
40012 Calderara di Reno
Bologna - Italy

© 2014 - 2017 Datalogic S.p.A. and/or its affiliates ◆ ALL RIGHTS RESERVED. ◆ Without limiting the rights under copyright, no part of this documentation may be reproduced, stored in or introduced into a retrieval system, or transmitted in any form or by any means, or for any purpose, without the express written permission of Datalogic S.p.A. and/or its affiliates.

Datalogic and the Datalogic logo are registered trademarks of Datalogic S.p.A. in many countries, including the U.S.A. and the E.U.

All other trademarks and brands are property of their respective owners. Datalogic reserves the right to make modifications and improvements without prior notification.

16/06/17

INDEX

1. Safety summary 1
2. Identification 3
3. Mounting instructions 4
3.1 Solid shaft encoders 4
3.1.1 Customary installation 4
3.1.2 Fissaggio con graffe (codice ST-58-KIT) 4
3.1.3 Installation using a flange (code ST-58-FLNG) 5
3.2 Hollow shaft encoders 6
3.2.1 AMT58-H15 6
4. Electrical connections 7
4.1 Connection cap 7
4.3 Connection cap with PGs 8
4.4 Connection cap with M12 connectors 9
4.5 Connection of the shield 9
4.6 RT Bus termination 10
4.7 Diagnostic LEDs 10
4.8 Baud rate: DIP A 11
4.9 Node number: DIP B 12
5. Quick reference 13
6. CANopen® interface 14
6.1 EDS file 14
6.2 Operation states 14
6.2.1 Initialization state 15
6.2.2 Pre-operational state 15
6.2.3 Operational state 15
6.2.4 Stopped state 15
6.3 Communication objects 16
6.3.1 Pre-defined connection set 16
6.4 NMT objects 17
6.5 Boot-up objects 17
6.6 PDO objects 17
PDO1 Cyclic mode: cyclic transmission 18
PDO2 and PDO3 SYNC mode: synchronous transmission 18
PDO4 Cyclic mode: cyclic transmission 18
6.7 SDO objects 19
6.7.1 Command 19
6.8 Object dictionary 20
6.8.1 Standard objects (DS 301) 20
1000-00 Device type 20
1001-00 Error register 20
1003 Pre-defined error field 20
1005-00 COB_ID SYNC message 20
1008-00 Name of device manufacturer 20
1009-00 Hardware version 21
100A-00 Software version 21
100C-00 Guard time 21
100D-00 Life time factor 21
1011-01 Restore default parameters 22
1014-00 COB-ID EMCY 23
1015-00 Inhibit time EMCY 23

1018 Identification object 23
1800 PDO1 parameters 23
1801 PDO2 parameters 24
1802 PDO3 parameters 24
1803 PDO4 parameters 24
1A00-01 PDO1 mapping parameter....25
1A01-01 PDO2 mapping parameter....25
1A02-01 PDO3 mapping parameter....25
1A03-01 PDO4 mapping parameter....25
6.8.2 Manufacturer specific objects....26
2104-00 Limit switch min. 26
2105-00 Limit switch max. 26
3000-00 Baud rate 26
3001-00 Node-ID 27
3005-00 Velocity format 28
3006-00 Velocity value....28
6.8.3 Device profile objects (DS 406)....29
6000-00 Operating parameters 29
Code sequence....29
Scaling function....29
Limit switch min....30
Limit switch max....30
6001-00 Counts per revolution....30
6002-00 Total resolution 30
6003-00 Preset value....31
6004-00 Position value 32
6200-00 Cyclic time 32
6500-00 Operating state 32
Code sequence....32
Scaling function....32
Limit switch min....32
Limit switch max....33
Current operating state 33
6501-00 Hardware counts per revolution 33
6502-00 Hardware number of turns 33
6504-00 Supported alarms 33
6506-00 Supported warnings....34
6507-00 Profile and software version....34
6508-00 Operating time 34
6509-00 Offset value....34
650A-01 Manufacturer offset value 34
650B-00 Serial number 34
6.9 Warning objects 35
6.10 Emergency objects 35
6.11 Node guarding protocol....36
7. Setting-up 37
8. Default parameters list 40

Subject index

1
1000-00 Device type 20
1001-00 Error register 20
1003 Pre-defined error field 20
1005-00 COB_ID SYNC message 20
1008-00 Name of device manufacturer .. 20
1009-00 Hardware version 21
100A-00 Software version 21
100C-00 Guard time 21
100D-00 Life time factor 21
1010-01 Store parameters 22
1011-01 Restore default parameters 22
1014-00 COB-ID EMCY 23
1015-00 Inhibit time EMCY 23
1018 Identification object 23
1800 PDO1 parameters 23
1801 PDO2 parameters 24
1802 PDO3 parameters 24
1803 PDO4 parameters 24
1A00-01 PDO1 mapping parameter 25
1A01-01 PDO2 mapping parameter 25
1A02-01 PDO3 mapping parameter 25
1A03-01 PDO4 mapping parameter 25
2
2104-00 Limit switch min. 26
2105-00 Limit switch max. 26
3
3000-00 Baud rate 26
3001-00 Node-ID 27
3005-00 Velocity format 28
3006-00 Velocity value 28
6
6000-00 Operating parameters 29
6001-00 Counts per revolution 30
6002-00 Total resolution 30
6003-00 Preset value 31
6004-00 Position value 32
6200-00 Cyclic time 32
6500-00 Operating state 32
6501-00 Hardware counts per revolution 33
6502-00 Hardware number of turns 33
6504-00 Supported alarms 33
6506-00 Supported warnings 34
6507-00 Profile and software version 34
6508-00 Operating time 34
6509-00 Offset value 34
650A-01 Manufacturer offset value 34
650B-00 Serial number 34
C
COB-ID of PDO1 23
COB-ID of PDO4 24
COB-ID of the PDO2 24
COB-ID of the PDO3 24
Code sequence 29; 32
Current operating state 33
F
Flash memory error 35
I
Initialization 15
L
Last error occurred 20
Limit switch max. 30; 33
Limit switch min. 30; 33
N
Node guarding error 35
Number of current errors 20
O
Operational 15
P
Pre-operational 15
Previous errors occurred 20
Product number 23
R
Revision number 23
S
Scaling function 29; 32
Stopped 15
T
Transmission type 23; 24; 25
V
Vendor number 23

Typographic and iconographic conventions

In this guide, to make it easier to understand and read the text the following typographic and iconographic conventions are used:

- parameters and objects both of the device and the interface are coloured in ORANGE;
- alarms are coloured in RED;
- states are coloured in FUCSIA.

When scrolling through the text some icons can be found on the side of the page: they are expressly designed to highlight the parts of the text which are of great interest and significance for the user. Sometimes they are used to warn against dangers or potential sources of danger arising from the use of the device. You are advised to follow strictly the instructions given in this guide in order to guarantee the safety of the user and ensure the performance of the device. In this guide the following symbols are used:

	This icon, followed by the word WARNING, is meant to highlight the parts of the text where information of great significance for the user can be found: user must pay the greatest attention to them! Instructions must be followed strictly in order to guarantee the safety of the user and a correct use of the device. Failure to heed a warning or comply with instructions could lead to personal injury and/or damage to the unit or other equipment.
	This icon, followed by the word NOTE, is meant to highlight the parts of the text where important notes needful for a correct and reliable use of the device can be found. User must pay attention to them! Failure to comply with instructions could cause the equipment to be set wrongly: hence a faulty and improper working of the device could be the consequence.
	This icon is meant to highlight the parts of the text where suggestions useful for making it easier to set the device and optimize performance and reliability can be found. Sometimes this symbol is followed by the word EXAMPLE when instructions for setting parameters are accompanied by examples to clarify the explanation.

Preliminary information

This guide is designed to describe the technical characteristics, installation and use of the CANopen encoders of the AMT58 series.
For any further information please refer to the product datasheet.

To make it easier to read the text, this guide is divided into two main sections.
In the first section general information concerning the safety, the mechanical installation and the electrical connection as well as tips for setting up and running properly and efficiently the unit are provided.
In the second section, entitled CANopen Interface, both general and specific information is given on the CANopen interface.
In this section the interface features and the objects implemented in the unit are fully described.

1. Safety summary

Safety

- Always adhere to the professional safety and accident prevention regulations applicable to your country during device installation and operation;
- installation and maintenance operations have to be carried out by qualified personnel only, with power supply disconnected and stationary mechanical parts;
- device must be used only for the purpose appropriate to its design: use for purposes other than those for which it has been designed could result in serious personal and/or the environment damage;
- high current, voltage and moving mechanical parts can cause serious or fatal injury;
- failure to comply with these precautions or with specific warnings elsewhere in this manual violates safety standards of design, manufacture, and intended use of the equipment;
- Datalogic Automation S.r.l. assumes no liability for the customer's failure to comply with these requirements.

Electrical safety

- Turn off power supply before connecting the device;
- connect according to explanation in section“4 – Electrical connections”.
- in compliance with the 2014/30/EU norm on electromagnetic compatibility, following precautions must be taken:
  - before handling and installing, discharge electrical charge from your body and tools which may come in touch with the device;
  - power supply must be stabilized without noise, install EMC filters on device power supply if needed;
  - always use shielded cables (twisted pair cables whenever possible);
  - avoid cables runs longer than necessary;
  - avoid running the signal cable near high voltage power cables;
  - mount the device as far as possible from any capacitive or inductive noise source, shield the device from noise source if needed;
  - to guarantee a correct working of the device, avoid using strong magnets on or near by the unit;
  - minimize noise by connecting the shield and/or the frame to ground. Make sure that ground is not affected by noise. The connection point to ground can be situated both on the device side and on user’s side. The best solution to minimize the interference must be carried out by the user.

Mechanical safety

- Install the device following strictly the information in the section “3 – Mounting instructions”.
- mechanical installation has to be carried out with stationary mechanical parts;
- do not disassemble the encoder;
- do not tool the encoder or its shaft;
- delicate electronic equipment: handle with care; do not subject the device and the shaft to knocks or shocks;
- respect the environmental characteristics declared by manufacturer;
- unit with solid shaft: in order to guarantee maximum reliability over time of mechanical parts, we recommend a flexible coupling to be installed to connect the encoder and user's shaft; make sure the misalignment tolerances of the flexible coupling are respected;
- unit with hollow shaft: the encoder can be mounted directly on a shaft whose diameter has to respect the technical characteristics specified in the purchase order and clamped by means of the collar and, when requested, the anti-rotation pin.

2. Identification

Device can be identified through the ordering code and the serial number printed on the label applied to its body.
Information is listed in the delivery document too.

Please always quote the ordering code and the serial number when reaching Datalogic Automation s.r.l. for purchasing spare parts or needing assistance.

For any information on the technical characteristics of the product refer to the technical catalogue.

3. Mounting instructions

WARNING
Installation has to be carried out by qualified personnel only, with power supply disconnected and mechanical parts compulsorily in stop.

3.1 Solid shaft encoders

- Mount the flexible coupling 1 on the encoder shaft;
- fix the encoder to the flange 2 (or to the mounting bell) by means of screws 3;
- secure the flange 2 to the support (or the mounting bell to the motor);
- mount the flexible coupling 1 on the motor shaft;
- make sure the misalignment tolerances of the flexible coupling 1 are respected.

3.1.1 Customary installation

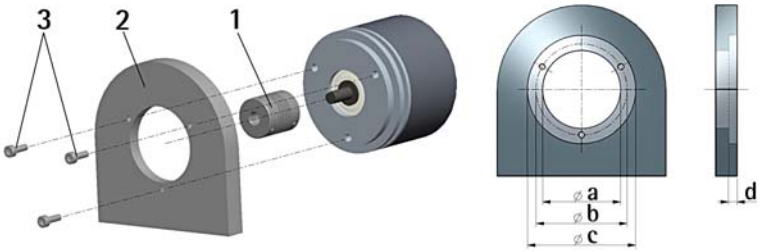

	a [mm]	b [mm]	c [mm]	d [mm]
AMT58	36 H7	48	-	-

3.1.2 Fissaggio con graffe (codice ST-58-KIT)

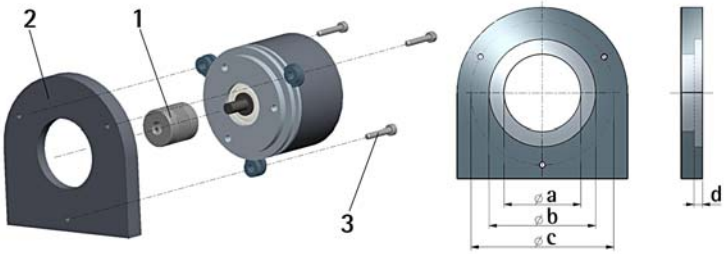

	a [mm]	b [mm]	c [mm]	d [mm]
AMT58	36 H7	-	67	-

3.1.3 Installation using a flange (code ST-58-FLNG)

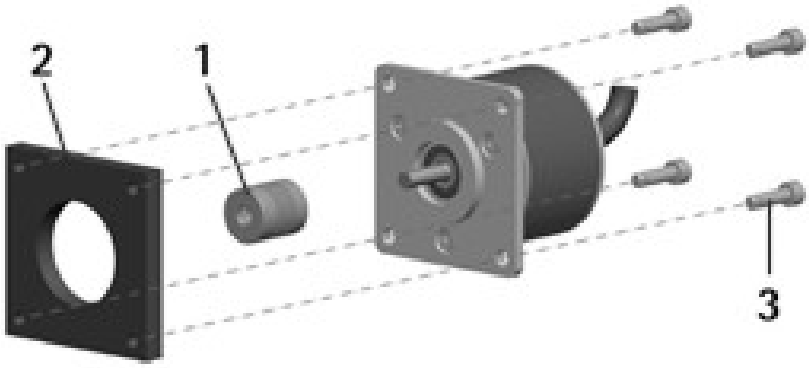

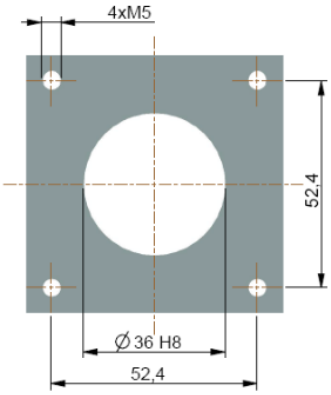

3.2 Hollow shaft encoders

3.2.1 AMT58-H15

- Mount the encoder on the motor shaft using the reducing sleeve 8 (if supplied). Avoid forcing the encoder shaft;
- fasten the fixing plate 4 to the rear of the motor using two M3 cylindrical head screws 5;
- fix the collar 3 to the encoder shaft (apply threadlocker to screw 3).

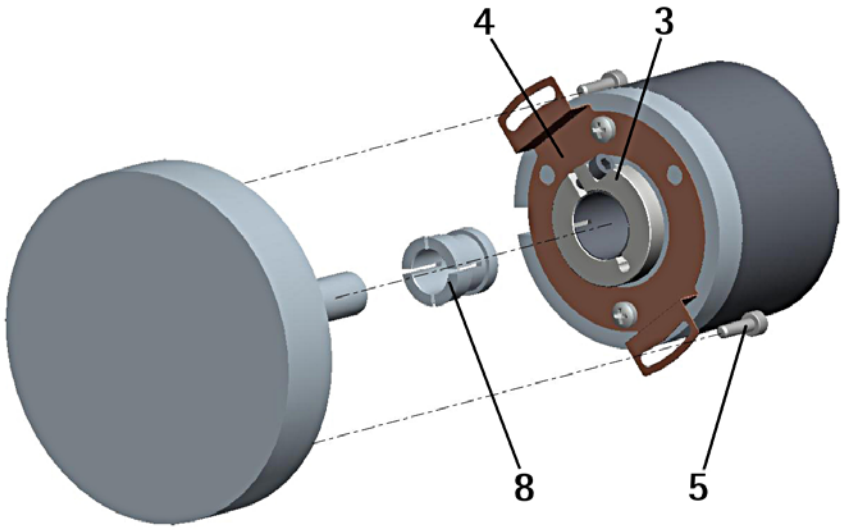

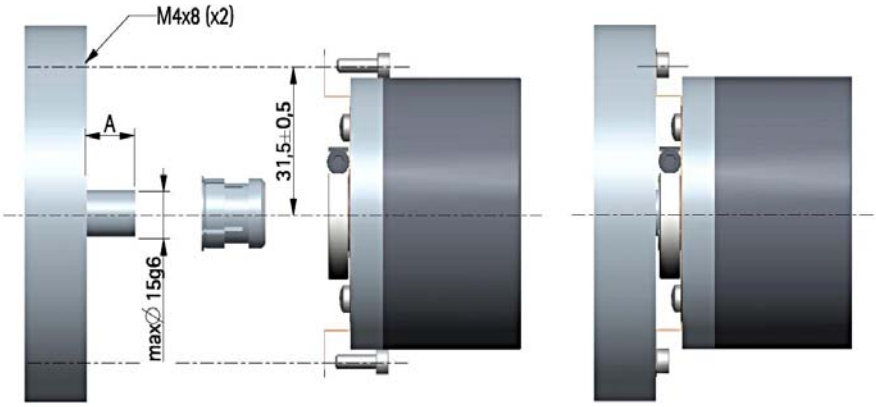

4. Electrical connections

WARNING
Power supply must be turned off before performing any electrical connection!

4.1 Connection cap

WARNING
Do not remove or mount the connection cap with power supply switched ON. Damage may be caused to internal components.

The terminal connectors for connecting the power supply and the BUS IN and BUS OUT cables (BC-CB connection cap) as well as the dip-switches meant to set the baud rate and the node ID and activate the termination resistance are located inside the encoder connection cap. Thus you must remove the connection cap to access any of them.

NOTE
Be careful not to damage the internal components when you perform this operation.

To remove the connection cap loosen the two screws 1. Please be careful with the internal connector.
Always replace the connection cap at the end of the operation. Take care in re-connecting the internal connector. Tighten the screws 1 using a tightening torque of approx. 2.5 Nm.

WARNING
You are required to check that the encoder body and the connection cap are at the same potential before replacing the connection cap!

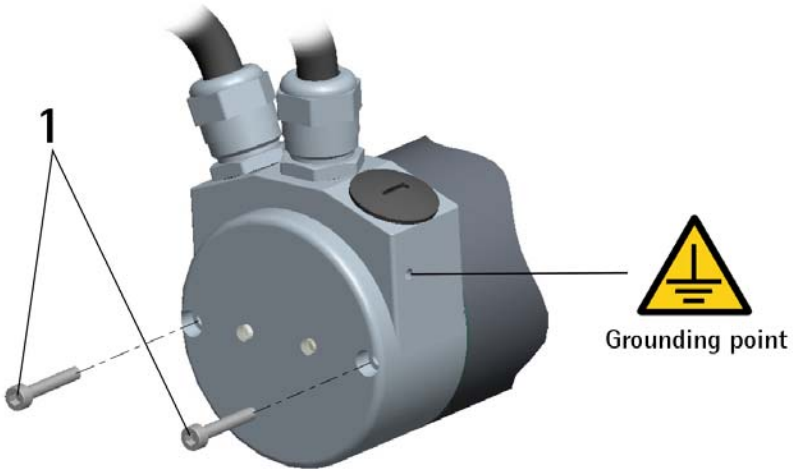

4.2 Ground connection

Minimize noise by connecting the shield and/or the connector housing and/or the frame to ground. Make sure that ground is not affected by noise. The connection point to ground can be situated both on the device side and on user's side. The best solution to minimize the interference must be carried out by the user. You are advised to provide the ground connection as close as possible to the encoder. We suggest using the ground point provided in the cap (see Figure, use 1 TCEI M3 x 6 cylindrical head screw with 2 tooth lock washers).

4.3 Connection cap with PGs

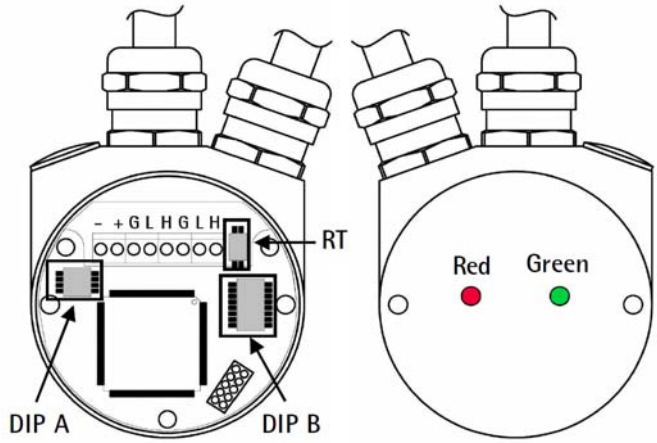

The connection cap is fitted with two PG9 cable glands for bus-IN, bus-OUT and supply voltage connections. The bus cables can be connected directly to the terminal connectors in front of each cable gland. It is recommended to use CANbus certificated cables. Core diameter should not exceed Ø 1,5 mm (0.06 inches).

Terminal connector	Description
-	0 VDC Supply voltage
+	+10VDC +30VDC Supply voltage
G	CAN GND [1]
L	CAN Low
H	CAN High
PG	CAN Shield [2]

[1] CAN GND is the 0V reference of CAN signals, it is not connected to 0VDC supply voltage.

[2] Connect cable shield to cable gland.

4.4 Connection cap with M12 connectors

Connection cap is fitted with two M12 connectors with pin-out in compliance with CANopen® standard. Therefore you can use standard CAN cables commercially available.

M12 connector
A coding
(frontal side)

male (BUS IN) female (BUS OUT)

M12	Description
Case	CAN Shield
1 [1]	
2	+10VDC +30VDC Supply voltage
3	0 VDC Supply voltage
4	CAN High
5	CAN Low

[1] CAN Shield is also connected to pin 1 to allow the connection of the shield even if the plug connector has a plastic case.

4.5 Connection of the shield

Disentangle and shorten the shielding 1 and then bend it over the part 2; finally place the ring nut 3 of the connector. Be sure that the shielding 1 is in tight contact with the ring nut 3.

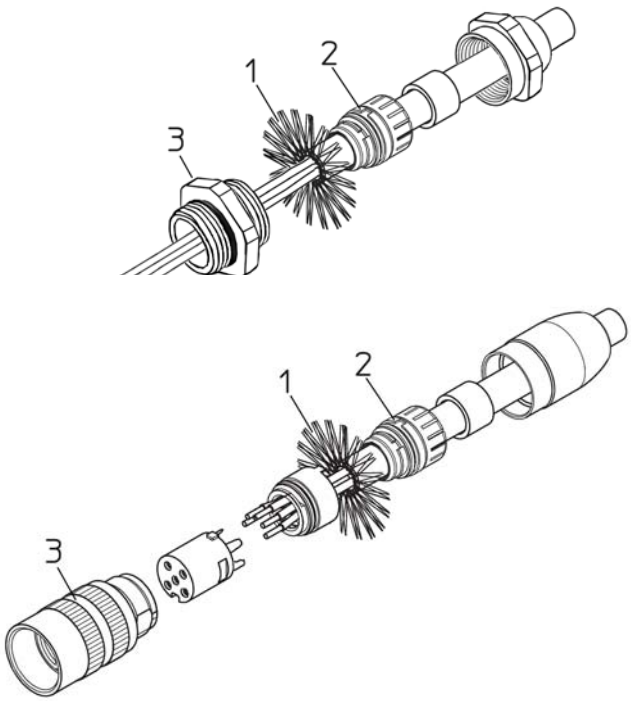

4.6 RT Bus termination

WARNING
Power supply must be turned off before performing this operation!

A bus termination resistance is provided in the connection cap and has to be activated as line termination in the last device of the transmission line.
Use RT Switch to activate or deactivate the bus termination.

RT	Description
1 = 2 = ON	Activated: if the encoder is the last device in the transmission line
1 = 2 = OFF	Deactivated: if the encoder is not the last device in the transmission line

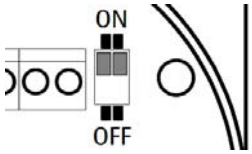

4.7 Diagnostic LEDs

Two diagnostic LEDs located in the rear side of the connection cap are designed to show the operating or fault status of the CANopen® interface.

GREEN LED	Description
ON	Encoder is in Operational state
Single flash	Encoder is in Stopped state
Blinking	Encoder is in Pre-Operational state

RED LED	Description
ON	The CAN controller is switched off
Double flash	Node guarding error
Single flash	Max. number of warning errors
Blinking	Generic error or Flash memory error
OFF	No error

During initialization, device carries out a hardware test to check LEDs operation. Both LEDs light up.

4.8 Baud rate: DIP A

WARNING
Power supply must be turned off before performing this operation!

Transmission rate can be set either via hardware or via software.
If DIP A bit 4 = ”OFF” the bit rate is set through object 3000-00 Baud rate in the “Object Dictionary” and can be modified using SDO messages.
If DIP A bit 4 = ”ON” the bit rate is set by DIP A.

DIP A:

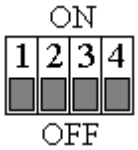

Set binary value of transmission rate considering that: ON=1, OFF=0.

bit	1 LSB	2	3 MSB	4
	2^0	2^1	2^2	ON/OFF

Available baud rate values:

Decimal value	Binary value	Baud rate
0	000	20 Kbit/s
1	001	50 Kbit/s
2	010	100 Kbit/s
3	011	125 Kbit/s
4	100	250 Kbit/s
5	101	500 Kbit/s (default)
6	110	800 Kbit/s
7	111	1000 Kbit/s

Example

Set 250Kbit/s:
$4_{10} = 100_2$ (binary value, see table above)

bit	1	2	3	4
	2^0	2^1	2^2	2^3
	OFF	OFF	ON	ON

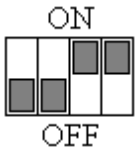

Set 500Kbit/s:
$5_{10} = 101_2$ (binary value, see table above)

bit	1	2	3	4
	2^0	2^1	2^2	2^3
	ON	OFF	ON	ON

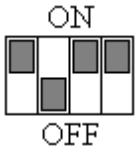

4.9 Node number: DIP B

WARNING
Power supply must be turned off before performing this operation!

Node number can be set either via hardware or via software.
Allowed node addresses range between 1 and 127. The default value is 1.

If all bits of DIP B are ”OFF” node number is set through the object 3001-00 Node-ID in the “Object Dictionary” and can be modified using SDO messages.

If one bit at least of DIP B is set to “ON” the node number is set through DIP B.

DIP B:

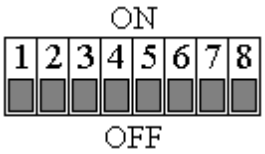

Set the node number in binary value: ON=1, OFF=0

bit	1 LSB	2	3	4	5	6	7 MSB	8 not used
	2^0	2^1	2^2	2^3	2^4	2^5	2^6	

Example
Set node number = 25:
25_{10} = 0001 1001_2 (binary value)

bit	1	2	3	4	5	6	7	8
	2^0	2^1	2^2	2^3	2^4	2^5	2^6	
	ON	OFF	OFF	ON	ON	OFF	OFF	OFF

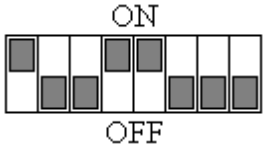

Set node number = 55:
55_{10} = 0011 0111_2 (binary value)

bit	1	2	3	4	5	6	7	8
	2^0	2^1	2^2	2^3	2^4	2^5	2^6	
	ON	ON	ON	OFF	ON	ON	OFF	OFF

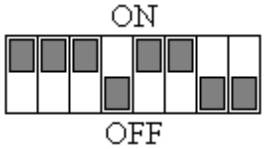

WARNING
If baud rate and node number are set via software, master device has to detect the baud rate of the slave (scanning of baud rate) when the encoder is being installed. Once communication has been activated new baud rate and node number values can be set (objects 3000-00 Baud rate and 3001-00 Node-ID). After having set new values, transmit a Reset node command and then save parameters (object 1010-01 Store parameters). To avoid conflict between Slaves, this operation has to be carried out when one only device is connected to the network.

5. Quick reference

Using the default settings provided by the manufacturer, you can switch on the device and read immediately its position.

Follow the instructions below to:

- read the device resolution;
- set the Operational mode;
- read the current position (cyclic mode and/or sync mode).

Default Baud rate and Node-ID are:
Baud rate = 500 Kbit/s
Node-ID = 1

Read resolution per revolution 6501-00 Hardware counts per revolution

Master → Encoder

COB-ID	Cmd	Index		Sub	Process data			
601	40	01	65	00	-	-	-	-

Encoder → Master

COB-ID	Cmd	Index		Sub	Process data			
581	43	01	65	01	A0	A1	A2	A3

steps/rev. = ((A3<<24) | (A2<<16) | (A1<<8) | A0)

Read number of revolutions 6502-00 Hardware number of turns

Master → Encoder

COB-ID	Cmd	Index		Sub	Process data			
601	40	02	65	00	-	-	-	-

Encoder → Master

COB-ID	Cmd	Index		Sub	Process data			
581	43	02	65	01	B0	B1	B2	B3

N. rev. =((B3<<24) | (B2<<16) | (B1<<8) | B0)

Set cyclic time 6200-00 Cyclic time (100 ms = 64h)

Master → Encoder

COB-ID	Cmd	Index		Sub	Process data			
600+ID	2B	00	62	00	64	00	-	-

Encoder → Master

COB-ID	Cmd	Index		Sub	Process data			
580+ID	60	00	62	00	00	00	-	-

Set Operational mode

Master → Encoder

COB-ID	Cmd	Node
000	01	01

Read the position every 100 ms

Encoder → Master

COB-ID	Byte 0	Byte 1	Byte 2	Byte 3
181	Low	…	…	High

6. CANopen® interface

Datalogic encoders are always slave devices in compliance with "Device profile for encoders", Class 2.
For any omitted information, refer to the "CiA Draft Standard 301" and "CiA Draft Standard 406" documents available at address www.can-cia.org.

6.1 EDS file

CANopen® encoders are supplied with their own EDS file **AMT58-xxx-16x14-FBUS-CB** (see enclosed documentation or visit www.datalogic.com).
EDS file has to be installed on CANopen® master device.

6.2 Operation states

CANopen® devices are designed to operate using different states. Transition from one state to another is made by sending specific NMT messages (see Figure below).

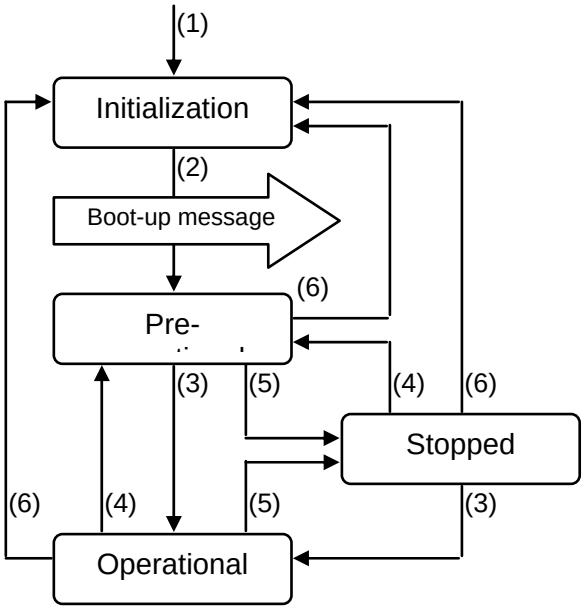

(1)	Power on
(2)	Initialization carried out, boot-up message is sent automatically
(3)	NMT message: Start remote node
(4)	NMT message: Enter pre-operational
(5)	NMT message: Stop remote node
(6)	NMT message: Reset node or Reset communication

6.2.1 Initialization state

This is the first state the CANopen® device enters after power is turned on or after a hardware reset. As soon as the basic CANopen® device initialization is carried out, device reads and loads the parameters saved on EPROM, sends a boot-up message and then switches automatically to Pre-operational state.

6.2.2 Pre-operational state

In this state communication between master and slave is possible using SDO messages. They allow working parameters to be set. Slave cannot send PDO messages.
To switch slave device to Operational state master must send a Start remote node command using a NMT message.

6.2.3 Operational state

In this state slave device is active and all communication objects are available. Slave device can use the parameters available in the “Object dictionary” and is allowed to send process data using PDO messages. “Object dictionary” can be accessed using SDO messages. To switch slave device to Pre-operational state master must send an Enter pre-operational command using a NMT message.

6.2.4 Stopped state

In this state slave device is forced to interrupt communication with the Master (except node guarding, if active).
Communication using PDO and SDO messages is not allowed.
To switch slave device to Pre-operational or Operational state master must send the specific commands Enter pre-operational or Start remote node using a NMT message.

6.3 Communication objects

Four different kinds of communication messages are used in a CANopen® network:

- Network management NMT protocol: NMT protocols are used to issue state machine change commands (i.e. to start and stop the devices), detect remote device boot-ups and error conditions.
- Process Data Objects PDO protocol: used to process real time data (transmission of process data in real time).
- Service Data Objects SDO protocol: used to set and read values from the object dictionary of a remote device.
- Special Function Objects:
  - SYNC: synchronization message used by master to enable slaves devices to transmit process data (encoder position and velocity).
  - Emergency: error messages are triggered by each error event.
  - Nodeguard: used to request the state of the slave.

Relation between device states and communication objects:

	Initial.	Pre-oper.	Operat.	Stopped
NMT		X	X	X
PDO			X	
SDO		X	X	
SYNC			X	
EMCY		X	X	
Boot-up	X			
Node guard		X	X	X

6.3.1 Pre-defined connection set

Master → Slave broadcast		
Type of COB (Object)	Function code (binary)	COB-ID (hex)
NMT	0000	000
SYNC	0001	080

peer-to-peer transmission		
EMERGENCY	0001	081 - 0FF
PDO 1 (tx)	0011	181 - 1FF
PDO 2 (tx)	0101	281 - 2FF
PDO 3 (tx)	0111	381 - 3FF
PDO4 (tx)	1001	481 - 4FF
SDO (tx)	1011	581 - 5FF
SDO (rx)	1100	601 - 67F
Node guard	1110	701 - 77F
Boot-up	1110	701 - 77F

The type of COB (tx or rx) is viewed from the slave device.

6.4 NMT objects

NMT structure:

COB-ID (11 bit)	
Func.code	Node ID
0000	0

2 CAN Data Bytes	
Command	Slave ID
NMT Func.	Slave ID

If Slave ID = 00h, the NMT message is issued to all network nodes.

NMT Function:

Command	NMT Function	State node
01 hex	Start remote node	Operational
02 hex	Stop remote node	Stopped
80 hex	Enter pre-operational	Pre-operational
81 hex	Reset node	Pre-operational
82 hex	Reset communication	Pre-operational

6.5 Boot-up objects

Boot-up message structure:

COB-ID(hex)
700+Node ID

1 CAN Data Bytes
00

6.6 PDO objects

PDO (tx) messages are always made up of 4 CAN Data Bytes and are used by the encoder to transmit the position value and/or the velocity value.

PDO structure:

IDENTIFIER	
COB-ID(hex)	
F.C.	Node-ID

4 CAN Data Bytes			
Byte 0	Byte 1	Byte 2	Byte 3
Low	…	…	High
position value (with PDO1, PDO2, PDO3)			
velocity value (with PDO4)			

PDO1 Cyclic mode: cyclic transmission

Encoder uses the PDO1 message to transmit the position value cyclically, i.e. periodically and independently from the Master.
The interval between two issues is set in the object 6200-00 Cyclic time.
To activate (or deactivate) cyclic mode it is necessary to set to 0 (or 1) the most significant bit of COB-ID used by PDO1 (object 1800 PDO1 parameters, sub 1).

PDO2 and PDO3 SYNC mode: synchronous transmission

Transmission of position value is managed by the Master by sending a SYNC message.
SYNC message is a high-priority COB transmitted by the Master to request the position value of the encoder.
If several nodes (encoders) are connected to the network, the Master receives the position values from the slaves respecting the Node number order.

The encoder can be programmed to send a reply after a set number of SYNC messages by setting a counter.
The PDO message will be transmitted after having received the set number of SYNC messages.
For PDO2 the value of the counter must be set in object 1801 PDO2 parameters, sub 2.
For PDO3 refer to object 1802 PDO3 parameters, sub 2.

SYNC transmission mode can be enabled (or disabled) by setting to 0 (or 1) the most significant bit (MSB) of COB-IB used by PDO (object 1801 PDO2 parameters / 1802 PDO3 parameters, sub1).

PDO4 Cyclic mode: cyclic transmission

Encoder uses the PDO4 message to transmit the velocity value cyclically, i.e. periodically and independently from the Master.
The interval between two issues is set in the object 6200-00 Cyclic time.
To activate (or deactivate) cyclic mode it is necessary to set to 0 (or 1) the most significant bit of COB-ID used by PDO4 (object 1803 PDO4 parameters, sub 1).

NOTE
Several transmission modes can be active at the same time.

6.7 SDO objects

SDO messages are used to set and read values from the object dictionary of the encoder. These parameters are described in the "Object dictionary" section.
4 bytes at the most are used for CAN data, other 4 bytes are used for Command, Index and Sub-index fields. SDO messages are always followed by confirmation. It follows that when Master sends a SDO message to Slave, slave always sends a reply (and a warning, should an error occur).

SDO structure:

IDENTIFIER		from 4 to 8 CAN data bytes							
COB-ID(hex)		0	1	2	3	4	5	6	7
F.C.	Node-ID	Com	Index		Sub	Data			
		1byte	LSB	MSB	1byte	LSB	…	…	MSB

Com	command
Index	parameter index
Sub	parameter sub-index
Data	parameter value

6.7.1 Command

The command byte contains the type of telegram transmitted to the CAN network.
Three types of telegram are available:

- Set: to send configuration parameters to a device;
- Req: used by master to read data from a device;
- Warnings: used by slave to send error messages to master (e.g. Index does not exist, …).

Command	COB	COB type	Data length
22h	Set	M → S request	not spec.
23h	Set	M → S request	4 byte
2Bh	Set	M → S request	2 byte
2Fh	Set	M → S request	1 byte
60h	Set	S → M confirmation	0 byte
40h	Req	M → S request	0 byte
42h	Req	S → M reply	not spec.
43h	Req	S → M reply	4 byte
4Bh	Req	S → M reply	2 byte
4Fh	Req	S → M reply	1 byte

6.8 Object dictionary

In the following pages the objects implemented are listed and described as follows:

Index-subindex Object name
[data types, attribute]

Abb. 1 Index and subindex are expressed in hexadecimal notation.
Abb. 2 Attribute:
ro = read only access
rw = read and write access

Unsigned16 data type:

Process data bytes	
byte 4	byte 5
LSByte	MSByte

Unsigned32 data type:

Process data bytes			
byte 4	byte 5	byte 6	byte 7
LSByte	…	…	MSByte

6.8.1 Standard objects (DS 301)

1000-00 Device type

[Unsigned32, ro]
Default = 0001 0196h= singleturn encoder, DS 406
0002 0196h= multiturn encoder, DS 406

1001-00 Error register

[Unsigned8, ro]
Should an error occur, bit 0 of this object will be set to "1".
Default = 00h

1003 Pre-defined error field

This object contains the last four errors which generated an emergency message.

- 00 Number of current errors [Unsigned8, rw]
  (write 00h to delete the error history)
- 01 Last error occurred [Unsigned32, ro]
- 02-04 Previous errors occurred [Unsigned32, ro]

1005-00 COB_ID SYNC message

[Unsigned32, rw]
Default = 0000 0080h

1008-00 Name of device manufacturer

[String, ro]

It shows the name of the device manufacturer.
Default = “DATALOGIC SRL”

1009-00 Hardware version

[String, ro]
It shows the hardware version of the device.

100A-00 Software version

[String, ro]
It shows the software version of the device.

100C-00 Guard time

[Unsigned16, rw]
It contains the Guard time expressed in msec (milliseconds).
Object is used in the “Node guarding protocol” controlled by the master. For more details see section “6.11 Node guarding protocol”.
Default = 0000h

100D-00 Life time factor

[Unsigned8, rw]
Object 100D-00 Life time factor is used in the “Node guarding protocol” controlled by the master. For more details see section “6.11 Node guarding protocol”.
Default = 00h

1010-01 Store parameters

[Unsigned32, rw]
Use this object to save all parameters on non-volatile memory.
Write "save" (ASCII code in hexadecimal form) in the data bytes:

Master → Encoder

COB-ID	Cmd	Index		Sub	Data bytes			
600+ID	23	10	10	01	73	61	76	65

Encoder → Master (confirmation)

COB-ID	Cmd	Index		Sub	Data bytes			
580+ID	60	10	10	01	00	00	00	00

1011-01 Restore default parameters

[Unsig32, rw]
This object allows the operator to restore all parameters to default values (default values are set at the factory by Datalogic Automation engineers to allow the operator to run the device for standard operation in a safe mode).
Write "load" (ASCII code in hexadecimal form) in the data bytes and then issue a Reset node command:

Master → Encoder

COB-ID	Cmd	Index		Sub	Data bytes			
600+ID	23	11	10	01	6C	6F	61	64

Encoder → Master (confirmation)

COB-ID	Cmd	Index		Sub	Data bytes			
580+ID	60	11	10	01	00	00	00	00

Master → Encoder (Reset node)

COB-ID	Cmd	Slave ID
000	81	ID

Encoder → Master (Boot-up)

COB-ID	Cmd
700+ID	00

NOTE
Save default values using the store parameters function (see object 1010-01 Store parameters).

1014-00 COB-ID EMCY

[Unsigned32, rw]
This object defines the COB-ID used for sending emergency messages (EMCY).
If the node address is set using the internal dip-switches (i.e. at least one dip-switch for setting the node has HIGH logic level = 1), when the power is turned on, this object is always forced to the default value. Otherwise, if the node address is set via software (i.e. all dip-switches for setting the node have LOW logic level = 0) it retains the set value, unless a software procedure for setting a new address is forced at power on.
Default = 0000 0080h+NodeID

1015-00 Inhibit time EMCY

[Unsigned16, rw]
Inhibit time of the emergency messages (EMCY) expressed in multiples of 100 µs. When set to 0, this function is disabled.
Default = 0000h

1018 Identification object

- 01 Vendor number [Unsigned32, ro]
- 02 Product number [Unsigned32, ro]
- 03 Revision number [Unsigned32, ro]

1800 PDO1 parameters

PDO1 message is used by default for cyclic transmission of the position value.
See object 6200-00 Cyclic time for setting the cyclic timer.

- 01 COB-ID of PDO1 [Unsigned32, rw]
  If the node address is set using the internal dip-switches (i.e. at least one dip-switch for setting the node has HIGH logic level = 1), when the power is turned on, this object is always forced to the default value. Otherwise, if the node address is set via software (i.e. all dip-switches for setting the node have LOW logic level = 0) it retains the set value, unless a software procedure for setting a new address is forced at power on.
  Default = 4000 0180h+NodeID (no RTR, COB-ID)
- 02 Transmission type [Unsigned8, rw]
  Default = FEh (cyclic transmission)

1801 PDO2 parameters

PDO2 message is used by default for synchronous transmission of the position value.

- 01 COB-ID of the PDO2 [Unsigned32, rw]
  If the node address is set using the internal dip-switches (i.e. at least one dip-switch for setting the node has HIGH logic level = 1), when the power is turned on, this object is always forced to the default value. Otherwise, if the node address is set via software (i.e. all dip-switches for setting the node have LOW logic level = 0) it retains the set value, unless a software procedure for setting a new address is forced at power on.
  Default = 4000 0280h+NodeID (no RTR, COB-ID)
- 02 Transmission type [Unsigned8, rw]
  Default = 01h(synchronous transmission at each SYNC command)
  Position value is transmitted after a set number of SYNC commands.
  Interval in SYNC commands must be set in object 1801 PDO2 parameters, sub 2.

1802 PDO3 parameters

PDO3 message is used by default for synchronous transmission of the position value.

- 01 COB-ID of the PDO3 [Unsigned32, rw]
  If the node address is set using the internal dip-switches (i.e. at least one dip-switch for setting the node has HIGH logic level = 1), when the power is turned on, this object is always forced to the default value. Otherwise, if the node address is set via software (i.e. all dip-switches for setting the node have LOW logic level = 0) it retains the set value, unless a software procedure for setting a new address is forced at power on.
  Default = C000 0380h+NodeID (disable, no RTR)
- 02 Transmission type [Unsigned8, rw]
  Default = 01h (synchronous transmission at each SYNC command).
  Position value is transmitted after a set number of SYNC commands.
  Interval in SYNC commands must be set in object 1802 PDO3 parameters, sub 2.

1803 PDO4 parameters

PDO4 is used by default for cyclic transmission of the velocity value. See object 6200-00 Cyclic time for setting the cyclic timer.

- 01 COB-ID of PDO4 [Unsigned32, rw]

  If the node address is set using the internal dip-switches (i.e. at least one dip-switch for setting the node has HIGH logic level = 1), when the power is turned on, this object is always forced to the

default value. Otherwise, if the node address is set via software (i.e. all dip-switches for setting the node have LOW logic level = 0) it retains the set value, unless a software procedure for setting a new address is forced at power on.
Default = C000 0480h+NodeID (no RTR, COB-ID)

- 02 Transmission type [Unsigned8, rw]
  Default = FEh (cyclic transmission)

NOTE
- Transmission of PDO1, PDO2, PDO3 and PDO4 messages can be enabled (or disabled) setting to “0” (or “1”) the most significant bit (MSB) used by PDO (object 180xh, sub1).
- Cyclic transmission or synchronous transmission can be modified setting the object 180xh sub 2:
  01h: synchronous transmission at each SYNC command;
  02h: synchronous transmission after two SYNC commands;
  …
  FEh: cyclic transmission.

1A00-01 PDO1 mapping parameter

[Unsig32, rw]
This object contains the mapped position value of the encoder according to DS406 device profile.
Default = 6004 0020h

1A01-01 PDO2 mapping parameter

[Unsig32, rw]
See object 1A00-01 PDO1 mapping parameter.

1A02-01 PDO3 mapping parameter

[Unsig32, rw]
See object 1A00-01 PDO1 mapping parameter.

1A03-01 PDO4 mapping parameter

[Unsig32, rw]
This object contains the mapped velocity value of the encoder according to the manufacturer profile.
Default = 3006 0020h

6.8.2 Manufacturer specific objects

2104-00 Limit switch min.

[Unsigned32, rw]
This object can be used to set the lowest software limit switch. (-).
If the encoder position is below the value set in this object, bit 12 of object 6500-00 Operating state will be set to 1.
To enable this function set bit 12 of object 6000-00 Operating parameters to 1.
Default = 0000 0010h

2105-00 Limit switch max.

[Unsigned32, rw]
This object can be used to set the highest software limit switch. (+).
If the encoder position is higher than the value set in this object, bit 13 of object 6500-00 Operating state will be set to 1.
To enable this function set bit 13 of object 6000-00 Operating parameters to 1.
Default = 003F FFF0h

3000-00 Baud rate

[Unsigned8, rw]
This object is meant to set the baud rate (transmission rate) according to the following table:

Data byte	Baud rate
00h	20 Kbit/s
01h	50 Kbit/s
02h	100 Kbit/s
03h	125 Kbit/s
04h	250 Kbit/s
05h	500 Kbit/s (default)
06h	800 Kbit/s
07h	1000 Kbit/s

The bit rate is set through object 3000-00 Baud rate only if bit 4 in DIP A is set to ”OFF”. If bit 4 in DIP A is set to ”ON”, the bit rate is set by DIP A. For any further information refer to section “**Errore. L'origine riferimento non è stata trovata.**”.

To change the baud rate value you have to:

- set the object 3000-00 Baud rate;
- send a Reset node command (or Reset communication command);
- save the parameter;
- set the Master to the new baud rate.

Default = 05h

Master → Encoder

COB-ID	Cmd	Index		Sub	Data byte
600+ID	2F	00	30	00	see table

Encoder → Master (confirmation)

COB-ID	Cmd	Index		Sub	Data byte
580+ID	60	00	30	00	00

Master → Encoder (Reset node)

COB-ID	Cmd	Slave ID
000	81	ID

Set the master device to the new baud rate:

Encoder → Master (Boot-up with new baud rate)

COB-ID	Cmd
700+ID	00

NOTE
To save the new Baud rate value execute the store parameters function (see object 1010-01 Store parameters).
When the power is turned off, parameters not saved are lost.

3001-00 Node-ID

[Unsigned8, rw]
This object defines the node identifier of the device.
The node number is set through the object 3001-00 Node-ID only if all bits of DIP B are set to ”OFF”. If one bit at least of DIP B is set to “ON” the node number is set through DIP B. For any further information refer to section “4.9 Node number: DIP B”.

To change the Node-ID value you have to:

- set the object 3001-00 Node-ID;
- send a Reset node command;
- save the parameter.

Default = 01h

Master → Encoder

COB-ID	Cmd	Index		Sub	Data byte
600+ID	2F	01	30	00	new Node-ID

Encoder → Master (confirmation)

COB-ID	Cmd	Index		Sub	Data byte
580+ID	60	01	30	00	00

Master → Encoder (Reset node)

COB-ID	Cmd	Slave ID
000	81	Old ID

Encoder → Master (Boot-up with new Node-ID)

COB-ID	Cmd
700+ID	00

NOTE
To save the new Node-ID value execute the store parameters function (see object 1010-01 Store parameters).
When the power is turned off, parameters not saved are lost.

3005-00 Velocity format

[Unsigned8, rw]
This attribute defines the engineering units for the velocity value.
00h = steps/s: number of steps per second (default);
01h = rpm: revolutions per minute.

3006-00 Velocity value

[Unsigned32, ro]
This attribute shows the current speed detected by the position sensor and calculated every 100 ms.
Value is transmitted according to the settings in the object 1803 PDO4 parameters.

6.8.3 Device profile objects (DS 406)

6000-00 Operating parameters

[Unsigned16, rw]

Bit	Function	bit = 0	bit = 1
0	Code sequence	CW (clockwise)	CCW (counter clockwise)
1	not used		
2	Scaling function	disabled	enabled
3…11	not used		
12	Limit switch min.	disabled	enabled
13	Limit switch max.	disabled	enabled
14…15	not used		

Default = 0000h

Code sequence

It defines whether the position value output by the transducer increases when the encoder shaft rotates clockwise (CW) or counterclockwise (CCW). When Code sequence = 0, the position value increases when the encoder shaft rotates clockwise; on the contrary, when Code sequence = 1, the position value increases when the encoder shaft rotates counterclockwise. CW and CCW rotations are viewed from shaft end.

Scaling function

If disabled the device uses its own physical resolution (see objects 6501-00 Hardware counts per revolution and 6502-00 Hardware number of turns); if enabled it uses the resolution set in objects 6001-00 Counts per revolution and 6002-00 Total resolution with the following relation:

Transmitted position =

$$\frac{\text{6001-00 Counts per revolution}}{\text{6501-00 Hardware counts per revolution}} * \text{real position} \leq \text{6002-00 Total resolution}$$

WARNING

Every time you enable the scaling function and/or change the scaling values (see objects 6001-00 Counts per revolution and 6002-00 Total resolution) then you are required to set a new preset value (see object 6003-00 Preset value) and finally save the new parameters (see object 1010-01 Store parameters).

Limit switch min.Limit switch max.
It allows to enable / disable the function of the objects 2104-00 Limit switch min. and 2105-00 Limit switch max.. For further information see on page 26.

6001-00 Counts per revolution

[Unsig32, rw]
This object sets a custom number of distinguishable steps per revolution.
Enabled if bit 2 Scaling function in the object 6000-00 Operating parameters = ”1”.

To avoid counting errors, check that

$$\frac{\text{6501-00 Hardware counts per revolution}}{\text{6001-00 Counts per revolution}} = \text{integer value.}$$

Allowed values are equal to or lower than 6501-00 Hardware counts per revolution (see encoder label).

WARNING
Every time you change the value in this object then you are required to set a new preset value (see object 6003-00 Preset value) and finally save the new parameters (see object 1010-01 Store parameters).

6002-00 Total resolution

[Unsigned32, rw]
This object sets a custom number of distinguishable steps over the total measuring range.
Enabled if bit 2 in the object 6000-00 Operating parameters = ”1”.
Allowed values are equal to or lower than Total hardware resolution (6501-00 Hardware counts per revolution ∗ 6502-00 Hardware number of turns, see encoder label).

WARNING
Every time you change the value in this object then you are required to set a new preset value (see object 6003-00 Preset value) and finally save the new parameters (see object 1010-01 Store parameters).

Example

Multiturn encoder HM5816/16384FB-6 with connection cap “BC-CB-C”.

Resolution is:

- Hardware counts per revolution: 6501-00 Hardware counts per revolution = 65536 (2^{16})
- Hardware number of turns: 6502-00 Hardware number of turns = 16384 (2^{14})
- Total hardware resolution: = 1073741824 (2^{30})

2048 counts/rev. ∗ 1024 turns are required:

- Enable scaling function: 6000-00 Operating parameters, bit 2 = “1”
- Counts per revolution: 6001-00 Counts per revolution = 2048 (0000 0800h)
- Total resolution: 6002-00 Total resolution = 2048*1024 = 2097152 (0020 0000h)

NOTE
We suggest setting values which are power of 2 (2^n: 2, 4, …, 2048, 4096, 8192,…) to be set in objects 6001-00 Counts per revolution and 6002-00 Total resolution to avoid counting errors.
If 6001-00 Counts per revolution and/or 6002-00 Total resolution values change, the 6003-00 Preset value must be updated to the new resolution. A new 6003-00 Preset value is also required.

6003-00 Preset value

[Unsigned32, rw]
This object allows to set the encoder position to a Preset value. Preset function is meant to assign a certain value to a desired physical position of the encoder shaft.
Default = 0000 0000h

NOTE

- If the scaling function is disabled (see bit 2 Scaling function in the object 6000-00 Operating parameters), 6003-00 Preset value must be lower than “Total hardware resolution” (6501-00 Hardware counts per revolution ∗ 6502-00 Hardware number of turns).
- If the scaling function is enabled (see bit 2 Scaling function in the object 6000-00 Operating parameters), 6003-00 Preset value must be lower than 6002-00 Total resolution.

6004-00 Position value

[Unsigned32, ro]

This object contains the position value, transmitted value is calculated considering the scaling values. Value is transmitted cyclically or synchronously according to the settings in the objects 1800 PDO1 parameters, 1801 PDO2 parameters and 1802 PDO3 parameters.

6200-00 Cyclic time

[Unsigned16, rw]

Cyclic timer value is used in asynchronous transmission mode to set the interval between two PDO issues. Parameter value is in milliseconds. See on pages **Errore. Il segnalibro non è definito.** and 23.

Default = 0000h

6500-00 Operating state

[Unsigned16, ro]

Bit	Function	bit = 0	bit = 1
0	Code sequence	Clockwise	CCW
1	not used		
2	Scaling function	Disabled	Enabled
3…11	not used		
12	Limit switch min.	posit. >	posit. <
13	Limit switch max.	posit. <	posit. >
14	not used		
15	Current operating state	Stopped / Pre-operational	Operational

Code sequence

It shows whether the code sequence is set to clockwise (CW) or counterclockwise (CCW). To set the code sequence to either CW or CCW you must set the bit 0 Code sequence of the object 6000-00 Operating parameters to 0 / 1.

Scaling function

It shows whether the scaling function is disabled or enabled. To disable / enable the scaling function you must set the bit 2 Scaling function of the object 6000-00 Operating parameters to 0 / 1.

Limit switch min.

If the encoder position is over the value set in the object 2104-00 Limit switch min., bit 12 of this object is set to “0”.

If the encoder position is below the value set in the object 2104-00 Limit switch min., bit 12 of this object is set to “1”.

To enable this function set the bit 12 Limit switch min. of the object 6000-00 Operating parameters to "1".

Limit switch max.
If the encoder position is below the value set in the object 2105-00 Limit switch max., bit 13 of this object is set to “0”.
If the encoder position is over the value set in the object 2105-00 Limit switch max., bit 13 of this object is set to “1”.
To enable this function set the bit 13 Limit switch max. of the object 6000-00 Operating parameters to "1".

Current operating state
It shows the current operating state of the unit. For further information on the available states see section “” on page 14.
bit 15 = 0: Stopped or Pre-operational state;
bit 15 = 1: Operational state.

6501-00 Hardware counts per revolution

[Unsigned32, ro]
This object defines the physical number of distinguishable steps each turn given by the hardware.
To set a custom resolution see object 6001-00 Counts per revolution.

6502-00 Hardware number of turns

[Unsig16, ro]
This object defines the physical number of distinguishable turns given by the hardware.
Total hardware resolution = 6501-00 Hardware counts per revolution ∗ 6502-00 Hardware number of turns.
To set a custom number of turns see objects 6001-00 Counts per revolution and 6002-00 Total resolution.

6504-00 Supported alarms

[Unsigned16, ro]
Default = 0000h (Alarms not supported).

6506-00 Supported warnings

[Unsigned16, ro]
Default = 0000h (Warnings not supported).

6507-00 Profile and software version

[Unsig32, ro]
Contains the profile and software version.
Profile version for encoders = 3.1
Software version = 1.1
Default = 0301 0101h

6508-00 Operating time

[Unsigned32, ro]
Default = FFFF FFFFh (not used)

6509-00 Offset value

[Integer32, ro]
This object contains the Offset value. This value is the difference between the physical position of the encoder and the position relating to 6003-00 Preset value.
Default = 0000 0000h

650A-01 Manufacturer offset value

[Integer32, ro]
This object contains the manufacturer offset value. This is the difference between the physical zero position of the encoder (zero set mechanically) and the zero position set by the manufacturer (zero set via software).
Default = 0000 0000h

650B-00 Serial number

[Unsigned32, ro]
Default = FFFF FFFFh (not used)

NOTE
To save new parameters execute the store parameters function (see object 1010-01 Store parameters).
When the power is turned off or in case of Reset node and Restore node commands, parameters not saved are lost.

6.9 Warning objects

For the complete list and meaning of the warning messages please refer to “SDO abort codes” section in “CiA Draft Standard 301” document available at address www.can-cia.org.

6.10 Emergency objects

Emergency (EMCY) objects are issued by the device when an internal error occurs.

EMCY structure:

IDENTIFIER	CAN Data Byte			
COB-ID(hex)	0	1	2	3…7
see object 1014-00 COB-ID EMCY	Error code		Error Sub-register	Specific code
	LSB	MSB	01	00…00

Available error codes:
1000h = Node guarding error
5530h = Flash memory error

6.11 Node guarding protocol

At system boot the “Node guarding protocol” is disabled; this protocol is enabled automatically as soon as the master device sends a RTR message (Remote Transmission Request) the first time.

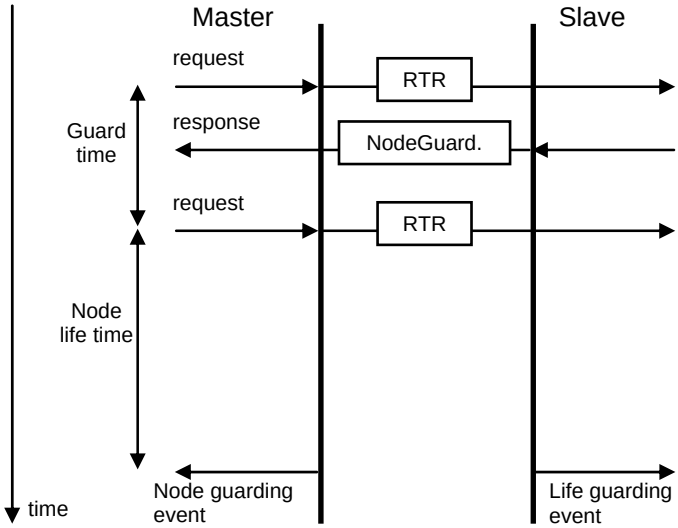

100C-00 Guard time: interval between two RTR messages.
Node life time: maximum time available for the encoder to receive a RTR message.

Node life time = 100C-00 Guard time ∗ 100D-00 Life time factor.
“Node guarding” is enabled if Node life time ≠ 0.

If the slave does not receive a RTR message before the Node life time has expired, it warns activating a “Life Guarding Event”. Furthermore the red LED starts flashing so indicating the Node guarding error, objects 1001-00 Error register and 1003 Pre-defined error field are updated and an error message is sent.
To reset the error send a Reset node command.

7. Setting-up

Here following are some examples of transmission between Master and Slave devices.
A generic "ID" value is used to indicate the encoder address; Master address is always 0. All values are expressed in hexadecimal notation.

Set Operational, Pre-operational state

NMT message Master → Slave

	COB-ID	Cmd	Node
Operational:	000	01	ID
Pre-operational:	000	80	ID

Set resolution per revolution 6001-00 Counts per revolution (2^{16}=0001 0000h)

Master → Encoder (Set request)

COB-ID	Cmd	Index		Sub	Process data			
600+ID	23	01	60	00	00	00	01	00

Encoder → Master (Set confirmation)

COB-ID	Cmd	Index		Sub	Process data			
580+ID	60	01	60	00	00	00	00	00

Set total resolution 6002-00 Total resolution (2^{28}=1000 0000h)

Master → Encoder (Set request)

COB-ID	Cmd	Index		Sub	Process data			
600+ID	23	02	60	00	00	00	01	00

Encoder → Master (Set confirmation)

COB-ID	Cmd	Index		Sub	Process data			
580+ID	60	02	60	00	00	00	00	00

Set Operating parameter 6000-00 Operating parameters
(Code sequence: CW, Scaling function: enabled, Limit switch min. / Limit switch max.: disabled)

Master → Encoder (Set request)

COB-ID	Cmd	Index		Sub	Process data			
600+ID	2B	00	60	00	04	00	-	-

Encoder → Master (Set confirmation)

COB-ID	Cmd	Index		Sub	Process data			
580+ID	60	00	60	00	00	00	-	-

Set Preset value 6003-00 Preset value (preset = 1000 = 03E8h)

Master → Encoder (Set request)

COB-ID	Cmd	Index		Sub	Process data			
600+ID	23	03	60	00	E8	03	00	00

Encoder → Master (Set confirmation)

COB-ID	Cmd	Index		Sub	Process data			
580+ID	60	03	60	00	00	00	00	00

Set Sync counter 1801 PDO2 parameters sub 2 (n = 5 = 05h)

Master → Encoder (Set request)

COB-ID	Cmd	Index		Sub	Process data			
600+ID	2F	01	18	02	05	-	-	-

Encoder → Master (Set confirmation)

COB-ID	Cmd	Index		Sub	Process data			
580+ID	60	01	18	02	00	-	-	-

Disable Sync mode 1801 PDO2 parameters sub 1
Read COB-ID used by PDO2:

Master → Encoder (Req request)

COB-ID	Cmd	Index		Sub	Process data			
600+ID	40	01	18	01	-	-	-	-

Encoder → Master (Req reply)

COB-ID	Cmd	Index		Sub	Process data			
580+ID	43	01	18	01	B0	B1	B2	B3

COB-ID used by PDO2 = ((B3<<24) | (B2<<16) | (B1<<8) | B0)
set the most significant bit to 1:

```
B3 |= 0x80;
```

Set new COB-ID used by PDO2 (1801 PDO2 parameters sub 1):

Master → Encoder (Set request)

COB-ID	Cmd	Index		Sub	Process data			
600+ID	23	01	18	01	B0	B1	B2	B3

Encoder → Master (Set confirmation)

COB-ID	Cmd	Index		Sub	Process data			
580+ID	60	01	18	01	00	00	00	00

Enable Cyclic mode 6200-00 Cyclic time
Set cyclic time (100 ms = 64h)

Master → Encoder (Set request)

COB-ID	Cmd	Index		Sub	Process data			
600+ID	2B	00	62	00	64	00	-	-

Encoder → Master (Set confirmation)

COB-ID	Cmd	Index		Sub	Process data			
580+ID	60	00	62	00	00	00	-	-

Read COB-ID used by PDO1 (1800 PDO1 parameters sub 1):

Master → Encoder (Req request)

COB-ID	Cmd	Index		Sub	Process data			
600+ID	40	00	18	01	-	-	-	-

Encoder → Master (Req reply)

COB-ID	Cmd	Index		Sub	Process data			
580+ID	43	00	18	01	B0	B1	B2	B3

COB-ID used by PDO1 = ((B3<<24) | (B2<<16) | (B1<<8) | B0)
set the most significant bit to 0:

```
B3 &= 0x7F;
```

Set new COB-ID used by PDO1 (1800 PDO1 parameters sub 1):

Master → Encoder (Set request)

COB-ID	Cmd	Index		Sub	Process data			
600+ID	23	00	18	01	B0	B1	B2	B3

Encoder → Master (Set confirmation)

COB-ID	Cmd	Index		Sub	Process data			
580+ID	60	00	18	01	00	00	00	00

NOTE
To save new parameters execute the store parameters function (see object 1010-01 Store parameters).
When the power is turned off or in case of Reset node and Restore node commands, parameters not saved are lost.

8. Default parameters list

Default values are expressed in hexadecimal notation.

Parameters list	Default values
1000-00 Device type	0x00010196 0x00020196
1001-00 Error register	0x00
1003 Pre-defined error field	-
1005-00 COB_ID SYNC message	0x00000080
1008-00 Name of device manufacturer	DATALOGIC*
1009-00 Hardware version	-
100A-00 Software version	-
100C-00 Guard time	0x0000
100D-00 Life time factor	0x00
1014-00 COB-ID EMCY	NODEID+0x00000080
1015-00 Inhibit time EMCY	0x0000
1018 Identification object	-
1800 PDO1 parameters, sub 1	NODEID+0x40000180
1800 PDO1 parameters, sub 2	0xFE
1801 PDO2 parameters, sub 1	NODEID+0x40000280
1801 PDO2 parameters, sub 2	0x01
1802 PDO3 parameters, sub 1	NODEID+0xC0000380
1802 PDO3 parameters, sub 2	0x01
1803 PDO4 parameters, sub 1	NODEID+0xC0000480
1803 PDO4 parameters, sub 2	0xFE
1A00-01 PDO1 mapping parameter, sub 1	0x60040020
1A01-01 PDO2 mapping parameter, sub 1	0x60040020
1A02-01 PDO3 mapping parameter, sub 1	0x60040020
1A03-01 PDO4 mapping parameter, sub 1	0x36000020
2104-00 Limit switch min.	0x00000010
2105-00 Limit switch max.	0x003FFFF0
3000-00 Baud rate	0x05
3001-00 Node-ID	0x01
3005-00 Velocity format	0x00
6000-00 Operating parameters	0x0000
6001-00 Counts per revolution	-
6002-00 Total resolution	-
6003-00 Preset value	0x00000000
6200-00 Cyclic time	0x0000
6500-00 Operating state	0x0000
6504-00 Supported alarms	0x0000
6506-00 Supported warnings	0x0000
6507-00 Profile and software version	0x03010101
6508-00 Operating time	0xFFFFFFFF
6509-00 Offset value	0x00000000
650A-01 Manufacturer offset value	0x00000000
650B-00 Serial number	0xFFFFFFFF

* Text string

DATALOGIC

Absolute Encoders

AMT58...16x14 DN

DeviceNet™

Instruction Manual

Datalogic S.r.l.
Via S. Vitalino 13
40012 Calderara di Reno
Bologna - Italy

© 2014 - 2017 Datalogic S.p.A. and/or its affiliates ◆ ALL RIGHTS RESERVED. ◆ Without limiting the rights under copyright, no part of this documentation may be reproduced, stored in or introduced into a retrieval system, or transmitted in any form or by any means, or for any purpose, without the express written permission of Datalogic S.p.A. and/or its affiliates.

Datalogic and the Datalogic logo are registered trademarks of Datalogic S.p.A. in many countries, including the U.S.A. and the E.U.

All other trademarks and brands are property of their respective owners. Datalogic reserves the right to make modifications and improvements without prior notification.

16/06/17

INDEX

1. Norme di sicurezza 1
2. Identification 3
3. Mounting instructions 4
3.1 Solid shaft encoders 4
3.1.1 Customary installation 4
3.1.2 Fissaggio con graffe (codice ST-58-KIT) 4
3.1.3 Installation using a flange (code ST-58-FLNG) 5
3.2 Hollow shaft encoders 6
3.2.1 AMT58-H15 6
4. Electrical connections 7
4.1 Connection cap 7
4.2 Ground connection 8
4.3 Connection cap with PGs 8
4.4 Connection cap with M12 connectors 9
4.5 Connection of the shield 9
4.6 Baud rate: DIP A 10
4.7 Node address: DIP B 11
4.8 Diagnostic LEDS 12
4.9 Bus termination 12
5. Quick reference (using RSNetWorx) 13
5.1 Import EDS file 13
5.2 Adding a node to the project 14
5.3 Encoder parameters configuration 15
5.4 Save parameter with RSNetWorx 18
5.5 Using scanner module 19
5.6 Encoder parameters 22
1 Position 22
2 Position sensor type 22
3 Counting direction 22
4 Scaling function control 22
5 Measuring units/rev 22
6 Total measuring range 23
7 Preset value 23
8 Physical resolution/revolution 23
9 Physical number of revolutions 23
10 Alarms 23
11 Supported alarms 24
12 Offset value 24
13 Velocity value 24
14 Velocity format 24
15 Dip switch 24
16 Data Tx in Poll mode 24
17 Data Tx in COS/Cyclic mode 25
18 Alarm flags 25
19 Delta for COS 25
20 Auto-save parameters 25
6. DeviceNet interface 26
6.1 EDS file 26
6.2 Communication messages 26
6.3 I/O Messages (Msg group 1) 28

6.4 Explicit Messages (Msg group 2) 29
6.4.1 Duplicate MAC-ID check 30
6.4.2 Error messages 31
6.4.3 Explicit Messages Connection 33
6.4.4 Message data transfer 34
6.5 Object dictionary 35
6.5.1 Class 01h: Identity Object 35
01-01-01 Vendor-ID 36
01-01-02 Device type 36
01-01-03 Product code 36
01-01-04 Revision 36
01-01-05 Status 36
01-01-06 Serial number 37
01-01-07 Product name 37
6.5.2 Class 03h: DeviceNet Object 38
03-01-01 Node Address 38
03-01-02 Baud rate 38
03-01-03 Bus-off interrupt 38
03-01-04 Bus-off counter 38
03-01-05 Allocation information 38
6.5.3 Class 05h: Connection Object 39
05-Inst-01 Connection status 39
05-Inst-02 Instance type 39
05-Inst-03 TransportClass_trigger 39
05-Inst-04 Produced connection ID 39
05-Inst-05 Consumed connection ID 39
05-Inst-06 Initial comm. Characteristics 39
05-Inst-07 Produced connection size 41
05-Inst-08 Consumed connection size 41
05-Inst-09 Expected packet rate 41
05-Inst-0C Watchdog time-out action 41
05-Inst-0D Produced connection path length 41
05-Inst-0E Produced connection path 41
05-Inst-0F Consumed connection path length 41
05-Inst-10 Consumed connection path 42
05-Inst-11 Production inhibit time 42
6.5.4 Class 23h: Position Sensor Object 43
23-01-03 Position value 43
23-01-0B Device type 43
23-01-0C Code sequence 43
23-01-0E Scaling function control 43
23-01-10 Resolution per revolution 45
23-01-11 Total measuring range 45
23-01-13 Preset value 46
23-01-14 Delta for COS 46
23-01-18 Velocity value 46
23-01-19 Velocity format 46
23-01-2A Hardware counts per revolution 46
23-01-2B Hardware number of turns 46
23-01-2C Alarms 46
23-01-2D Supported alarms 47
23-01-2E Alarm flags 47

23-01-33 Offset 47
23-01-65 Dip switch 47
23-01-66 Data Tx in Poll mode 47
23-01-67 Data Tx in COS/Cyclic mode 48
23-01-68 Auto-save parameters 48
6.5.5 Class 2Bh: Acknowledge Handler Object 49
2B-01-01 Acknowledge timer 49
2B-01-02 Retry Limit 49
2B-01-03 Connection Instance of COS 49
7 Setup 50
7.1 Read and set parameters 50
7.1.1 Set 23-01-13 Preset value 51
7.1.2 Save parameter 52
7.1.3 Close Master/Slave connection 52
7.2 Set Cyclic mode without velocity 53

Typographic and iconographic conventions

In this guide, to make it easier to understand and read the text the following typographic and iconographic conventions are used:

- parameters and objects both of the device and the interface are coloured in ORANGE;
- alarms are coloured in RED;
- states are coloured in FUCSIA.

When scrolling through the text some icons can be found on the side of the page: they are expressly designed to highlight the parts of the text which are of great interest and significance for the user. Sometimes they are used to warn against dangers or potential sources of danger arising from the use of the device. You are advised to follow strictly the instructions given in this guide in order to guarantee the safety of the user and ensure the performance of the device. In this guide the following symbols are used:

	This icon, followed by the word WARNING, is meant to highlight the parts of the text where information of great significance for the user can be found: user must pay the greatest attention to them! Instructions must be followed strictly in order to guarantee the safety of the user and a correct use of the device. Failure to heed a warning or comply with instructions could lead to personal injury and/or damage to the unit or other equipment.
	This icon, followed by the word NOTE, is meant to highlight the parts of the text where important notes needful for a correct and reliable use of the device can be found. User must pay attention to them! Failure to comply with instructions could cause the equipment to be set wrongly: hence a faulty and improper working of the device could be the consequence.
	This icon is meant to highlight the parts of the text where suggestions useful for making it easier to set the device and optimize performance and reliability can be found. Sometimes this symbol is followed by the word EXAMPLE when instructions for setting parameters are accompanied by examples to clarify the explanation.

1. Norme di sicurezza

Safety

- Always adhere to the professional safety and accident prevention regulations applicable to your country during device installation and operation;
- installation and maintenance operations have to be carried out by qualified personnel only, with power supply disconnected and stationary mechanical parts;
- device must be used only for the purpose appropriate to its design: use for purposes other than those for which it has been designed could result in serious personal and/or the environment damage;
- high current, voltage and moving mechanical parts can cause serious or fatal injury;
- warning ! Do not use in explosive or flammable areas;
- failure to comply with these precautions or with specific warnings elsewhere in this manual violates safety standards of design, manufacture, and intended use of the equipment;
- Datalogic Automation S.r.l. assumes no liability for the customer's failure to comply with these requirements.

Electrical safety

- Turn off power supply before connecting the device;
- connect according to explanation in section “4 – Electrical connections”;
- in compliance with the 2014/30/EU norm on electromagnetic compatibility, following precautions must be taken:
  - before handling and installing, discharge electrical charge from your body and tools which may come in touch with the device;
  - power supply must be stabilized without noise, install EMC filters on device power supply if needed;
  - always use shielded cables (twisted pair cables whenever possible);
  - avoid cables runs longer than necessary;
  - avoid running the signal cable near high voltage power cables;
  - mount the device as far as possible from any capacitive or inductive noise source, shield the device from noise source if needed;
  - to guarantee a correct working of the device, avoid using strong magnets on or near by the unit;
  - minimize noise by connecting the shield and/or the connector housing and/or the frame to ground. Make sure that ground is not affected by noise. The connection point to ground can be situated both on the device side and on user’s side. The best solution to minimize the interference must be carried out by the user.

Mechanical safety

- Install the device following strictly the information in the section “3 – Mounting instructions”;
- mechanical installation has to be carried out with stationary mechanical parts;
- do not disassemble the encoder;
- do not tool the encoder or its shaft;
- delicate electronic equipment: handle with care; do not subject the device and the shaft to knocks or shocks;
- respect the environmental characteristics declared by manufacturer;
- solid shaft: use a flexible coupling to connect the encoder to motor shaft. Make sure the misalignment tolerances of the flexible coupling are respected.

2. Identification

Device can be identified through the ordering code and the serial number printed on the label applied to its body.
Information is listed in the delivery document too.

Please always quote the ordering code and the serial number when reaching Datalogic Automation s.r.l. for purchasing spare parts or needing assistance.

For any information on the technical characteristics of the product refer to the technical catalogue.

3. Mounting instructions

WARNING
Installation has to be carried out by qualified personnel only, with power supply disconnected and mechanical parts compulsorily in stop.

3.1 Solid shaft encoders

- Mount the flexible coupling 1 on the encoder shaft;
- fix the encoder to the flange 2 (or to the mounting bell) by means of screws 3;
- secure the flange 2 to the support (or the mounting bell to the motor);
- mount the flexible coupling 1 on the motor shaft;
- make sure the misalignment tolerances of the flexible coupling 1 are respected.

3.1.1 Customary installation

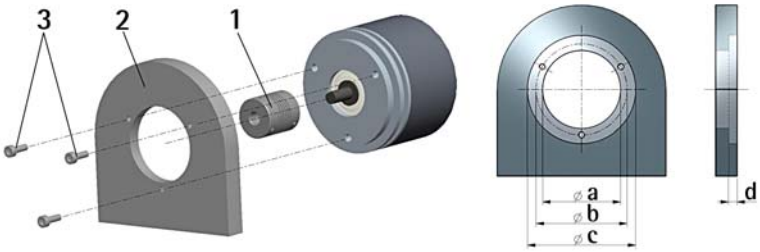

	a [mm]	b [mm]	c [mm]	d [mm]
AMT58	36 H7	48	-	-

3.1.2 Fissaggio con graffe (codice ST-58-KIT)

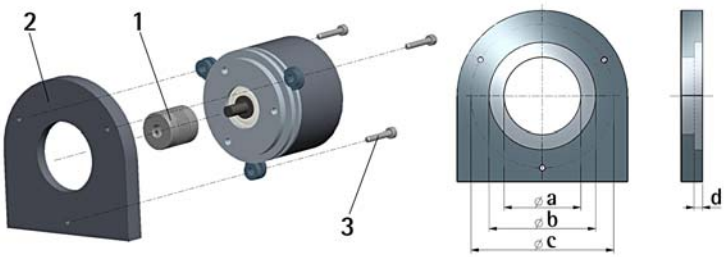

	a [mm]	b [mm]	c [mm]	d [mm]
AMT58	36 H7	-	67	-

3.1.3 Installation using a flange (code ST-58-FLNG)

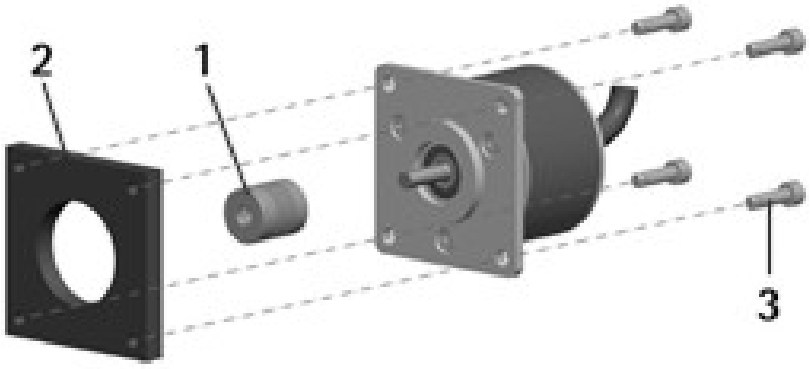

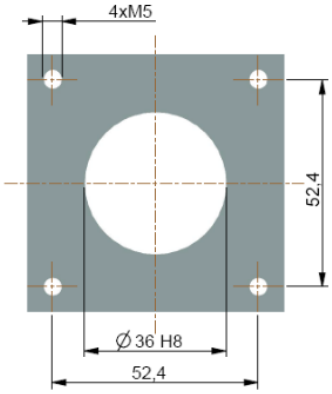

3.2 Hollow shaft encoders

3.2.1 AMT58-H15

- Mount the encoder on the motor shaft using the reducing sleeve 8 (if supplied). Avoid forcing the encoder shaft;
- fasten the fixing plate 4 to the rear of the motor using two M3 cylindrical head screws 5;
- fix the collar 3 to the encoder shaft (apply threadlocker to screw 3).

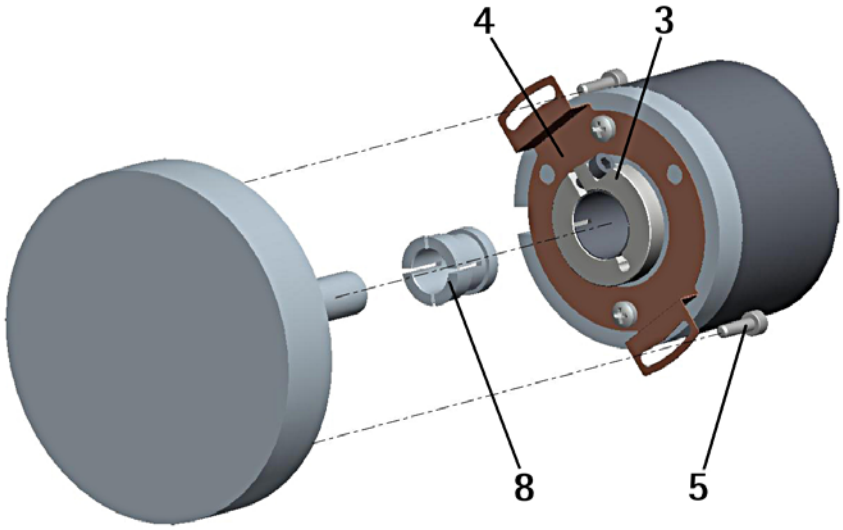

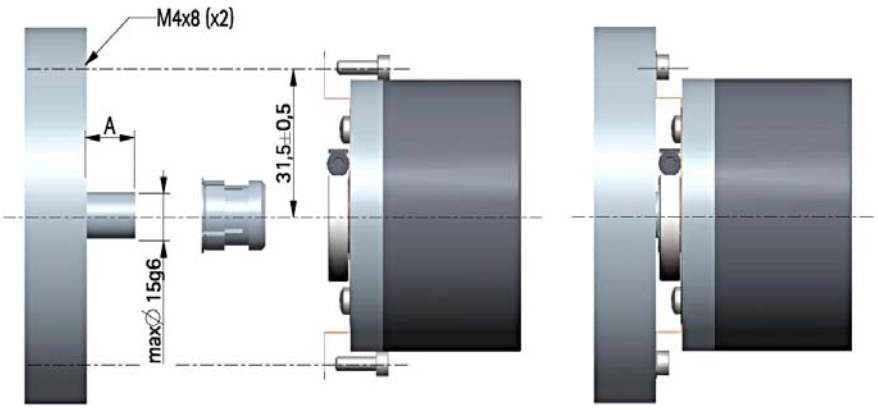

4. Electrical connections

4.1 Connection cap

WARNING
Do not remove or mount the connection cap with power supply switched ON. Damage may be caused to internal components.

The terminal connectors for connecting the power supply and the BUS IN and BUS OUT cables (connection cap) as well as the dip-switches meant to set the baud rate and the node ID and activate the termination resistance are located inside the encoder connection cap. Thus you must remove the connection cap to access any of them.

NOTE
Be careful not to damage the internal components when you perform this operation.

To remove the connection cap loosen the two screws 1.
Please be careful with the internal connector.
Always replace the connection cap at the end of the operation.
Take care in re-connecting the internal connector.
Tighten the screws 1 using a tightening torque of approx. 2.5 Nm.

WARNING
You are required to check that the encoder body and the connection cap are at the same potential before replacing the connection cap!

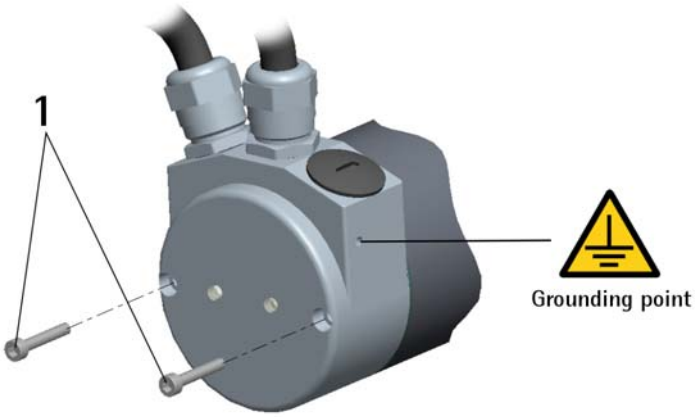

4.2 Ground connection

Minimize noise by connecting the shield and/or the connector housing and/or the frame to ground. Make sure that ground is not affected by noise. The connection point to ground can be situated both on the device side and on user's side. The best solution to minimize the interference must be carried out by the user. You are advised to provide the ground connection as close as possible to the encoder. We suggest using the ground point provided in the cap (see Figure, use 1 TCEI M3 x 6 cylindrical head screw with 2 tooth lock washers).

4.3 Connection cap with PGs

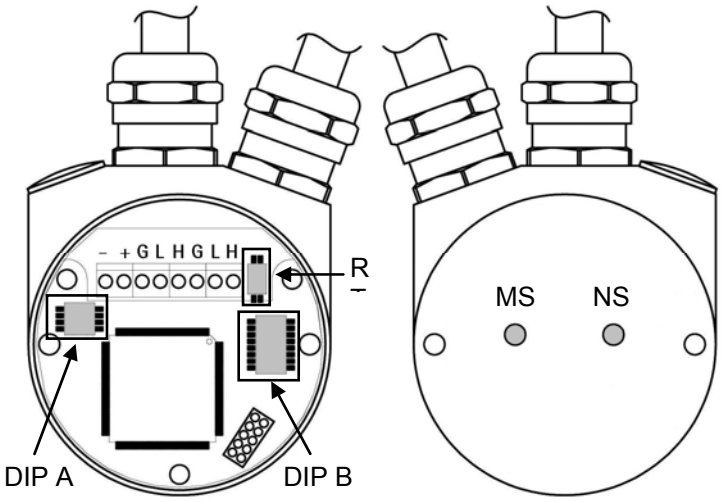

The connection cap is fitted with two cable glands PG9 type for bus-IN and bus-OUT connections. The bus cables can be connected directly to the terminal connectors placed in front of each cable gland.

We recommend DeviceNet certificated cables to be used. Core diameter should not exceed Ø 1,5 mm (0.06 inches).

Terminal connector	Description
-	0 VDC Supply voltage
+	+10VDC +30VDC Supply voltage
G	CAN GND [1]
L	CAN Low
H	CAN High
PG	CAN Shield [2]

[1] CAN GND is the 0V reference of CAN signals, it is not connected to 0VDC supply voltage.

[2] Connect cable shield to cable gland.

4.4 Connection cap with M12 connectors

BC-FD-C connection cap is fitted with two M12 connectors with pin-out in compliance with DeviceNet standard.
Therefore you can use standard DeviceNet cables commercially available.

M12 connector
A coding
(frontal side)

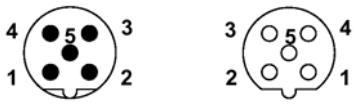

male (BUS IN) female (BUS OUT)

Pin	Function
Case	CAN Shield
1 [1]	
2	+10VDC +30VDC Supply voltage
3	0 VDC Supply voltage
4	CAN High
5	CAN Low

[1] CAN Shield is also connected to pin 1 to allow the connection of the shield even if the plug connector has a plastic case.

4.5 Connection of the shield

Disentangle and shorten the shielding 1 and then bend it over the part 2; finally place the ring nut 3 of the connector. Be sure that the shielding 1 is in tight contact with the ring nut 3.

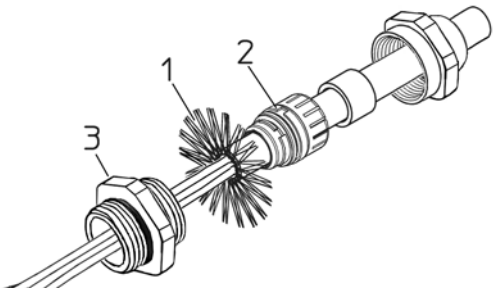

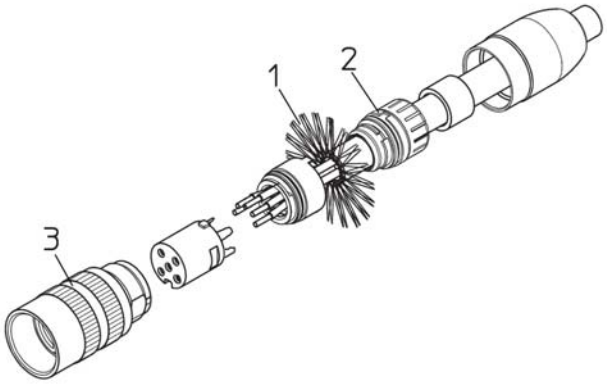

4.6 Baud rate: DIP A

WARNING
Power supply must be turned off before performing this operation!

Bit rate must be set using DIP A dip-switches:

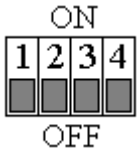

Set binary value of transmission rate considering that: ON=1, OFF=0.

bit	1	2	3	4
	2^1	2^0	OFF	OFF

Baud rate values table:

Binary value	Baud rate
00	125 Kbit/s
10	250 Kbit/s
01	500 Kbit/s (default)

NOTE
Bits 3 and 4 must be always set to OFF.

Examples

Set the baud rate to 250 Kbit/s:
10 (binary value, see table above)

bit	1	2	3	4
	ON	OFF	OFF	OFF

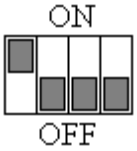

Set baud rate to 500 Kbit/s:
01 (binary value, see table above)

bit	1	2	3	4
	OFF	ON	OFF	OFF

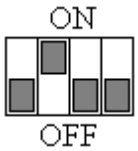

4.7 Node address: DIP B

WARNING
Power supply must be turned off before performing this operation!

The node number must be set via hardware using DIP B dip-switches.
Allowed addresses range between 0 and 63. The default value is 1.

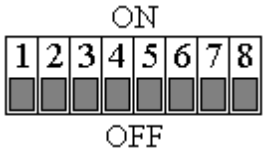

Set the node number in binary value: ON=1, OFF=0

bit	1 LSB	2	3	4	5	6 MSB	7 not used	8 not used
	2^0	2^1	2^2	2^3	2^4	2^5		

Example

Set node number = 25:
25_{10} = 0001 1001_2 (binary value)

bit	1	2	3	4	5	6	7	8
	2^0	2^1	2^2	2^3	2^4	2^5		
	ON	OFF	OFF	ON	ON	OFF	OFF	OFF

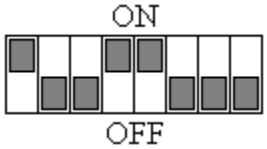

Set node number = 55:
55_{10} = 0011 0111_2 (binary value)

bit	1	2	3	4	5	6	7	8
	2^0	2^1	2^2	2^3	2^4	2^5		
	ON	ON	ON	OFF	ON	ON	OFF	OFF

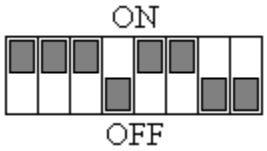

4.8 Diagnostic LEDS

Two diagnostic LEDs located in the rear side of the connection cap are designed to show the operating or fault status of the DeviceNet interface and the system as well.

NS Led Network Status LED: this LED shows the status of the communication network.

MS Led Module Status LED: this LED shows the status of the device.

NS Led	Description
OFF	Not powered or not on-line
Red ON	Encoder communication failure
Flashing red	Connection time-out
Green ON	Device on-line and connected
Flashing green	Device on-line but not connected
Flashing green / red	Communication error

MS Led	Description
OFF	No power supply
Red ON	Unrecoverable fault (see attribute on page 44)
Flashing red	Recoverable fault, may need replacing (see attribute on page 44)
Green ON	Device operational
Flashing green	Device on-line but not connected (standby)
Flashing green / red	Device self test

4.9 Bus termination

A bus termination resistance is provided in the connection cap.
This has to be activated as line termination in the last device.
Use RT Switch to activate or deactivate the bus termination.

RT	Description
1 = 2 = ON	Activated: if the encoder is the last device in the transmission line
1 = 2 = OFF	Deactivated: if the encoder is not the last device in the transmission line

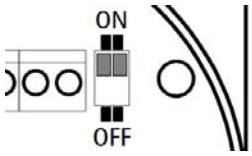

5. Quick reference (using RSNetWorx)

5.1 Import EDS file

DeviceNet encoders are supplied with their own EDS file **AMT58-xxx-16x14-FBUS-DN** (see enclosed documentation or click www.datalogic.com).
EDS file has to be installed on the Master device.

In this section the installation and configuration of the device using Rockwell Automation's RSNetWorx program are described.

On the menu bar of the RSNetWorx window, select the Tools menu and then press the EDS Wizard… command.

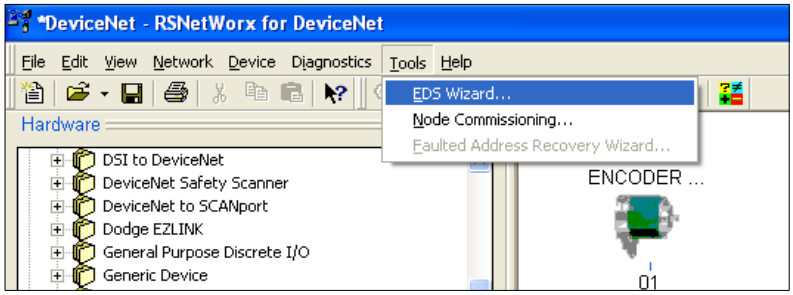

In the EDS Wizard window select Register an EDS file(s) option and then press Next > button.

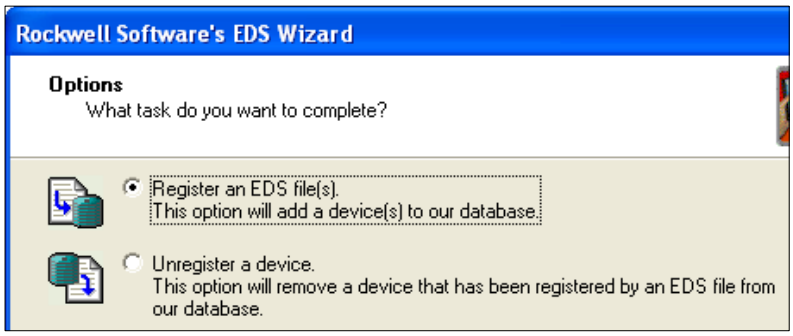

Press the Browse... button to browse through the folders and select the .eds file to be installed:
CD drive:\ROTACOD\DeviceNet\ **AMT58-xxx-16x14-FBUS-DN** if the file is in the enclosed CD or a different path; finally press the Next > button.

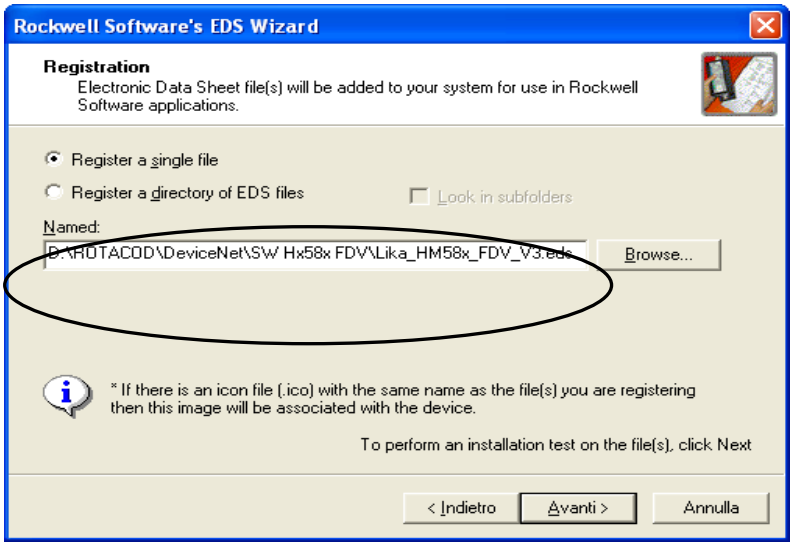

Then, follow the remaining steps to complete the EDS wizard.

5.2 Adding a node to the project

In the Hardware pane of the RSNetworx window, open the directory tree and select \Generic Device; drag the “AMT58” module to the Graph pane on the right.

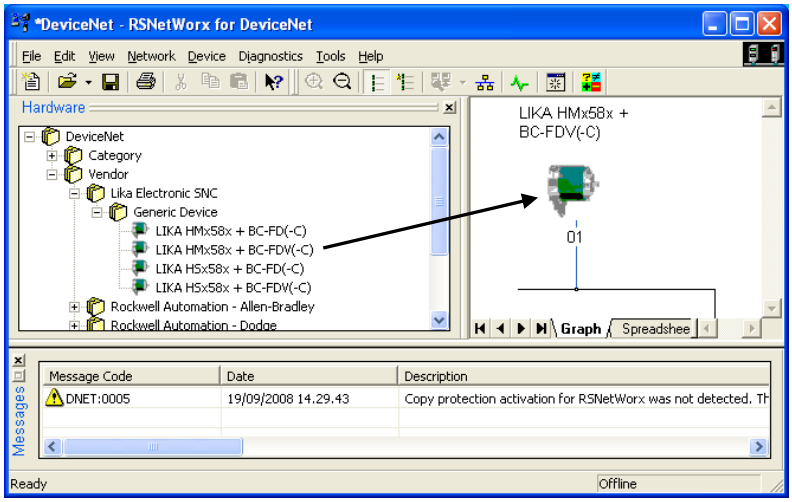

5.3 Encoder parameters configuration

Double-click the encoder icon in the Graph pane and open the Properties window.

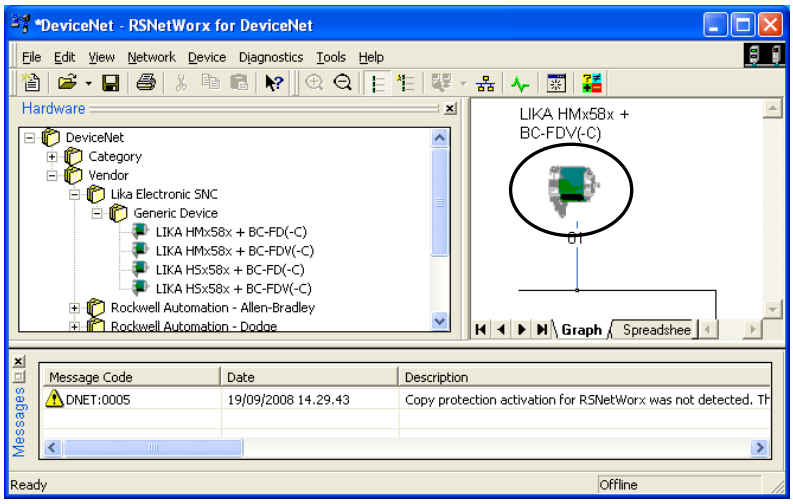

Open the General page of the Properties window and set the address node in the Address box.

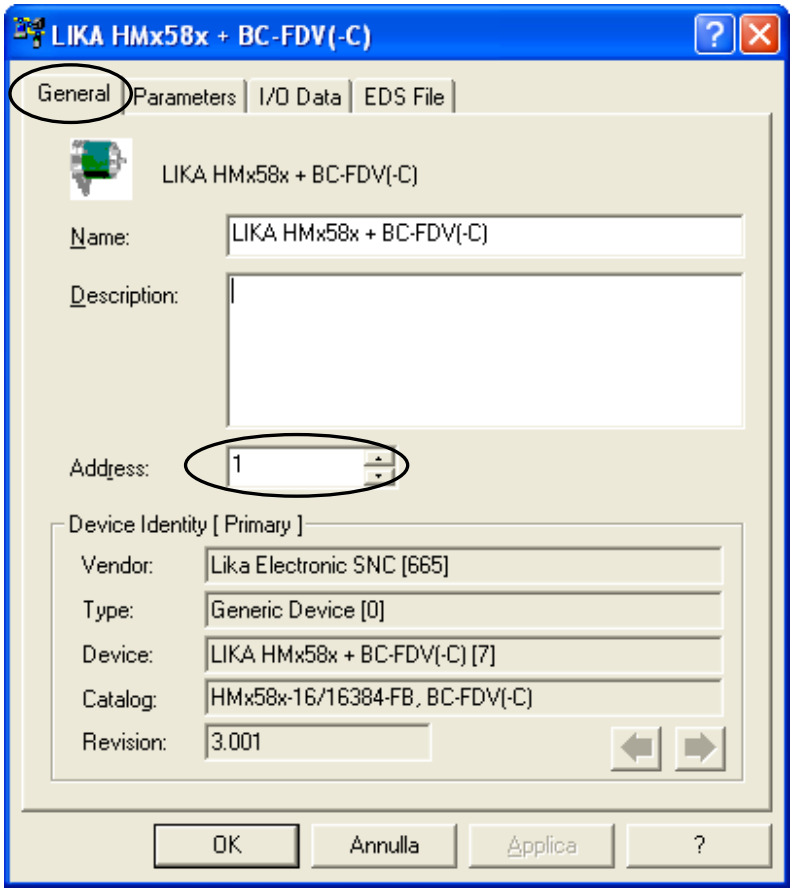

Open the Parameters page of the Properties window if you need to read, set and save the encoder parameters.

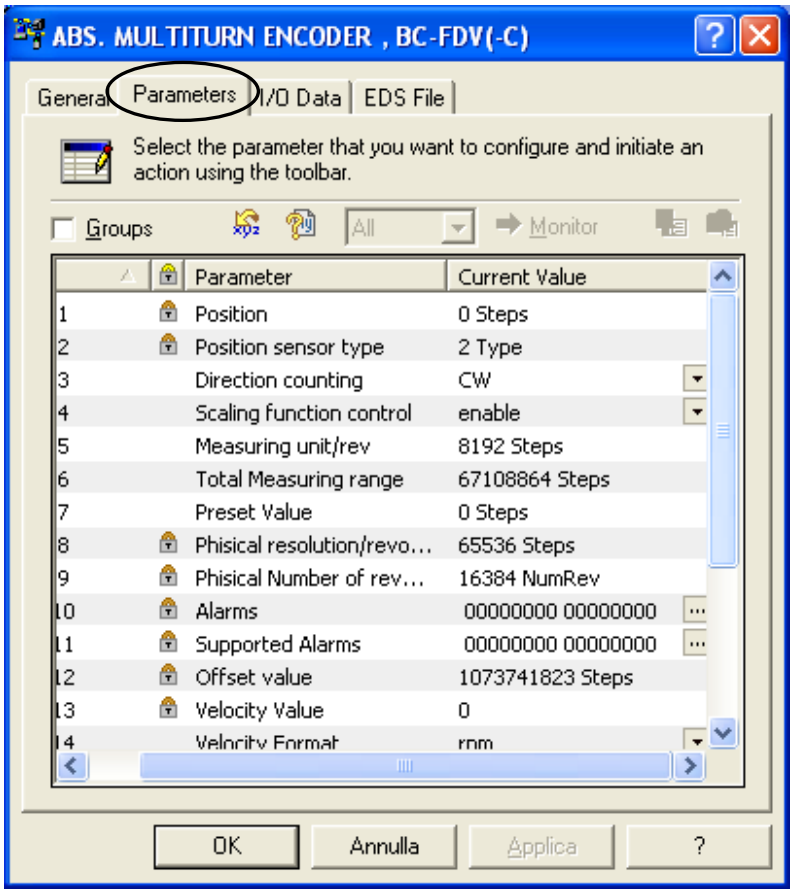

Please pay particular attention to parameters 16 Data Tx in Poll mode, 17 Data Tx in COS/Cyclic mode and 20 Auto-save parameters.
Parameters 16 Data Tx in Poll mode and 17 Data Tx in COS/Cyclic mode must be set in accordance with the scanner module settings (si see section “5.5 Using scanner module“).

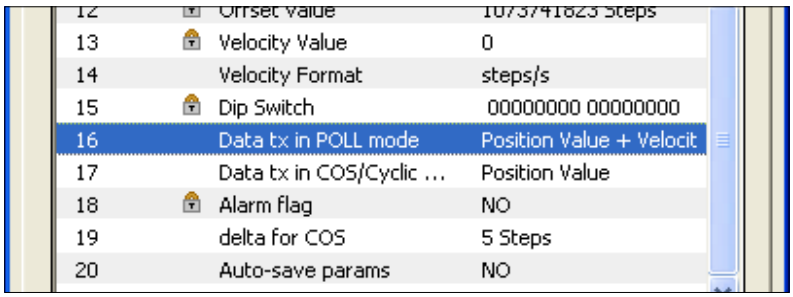

Example
Parameter 16:
16 Data Tx in Poll mode = “Position Value + Velocity”
(position and velocity)

Parameter 17:
17 Data Tx in COS/Cyclic mode = ”Position Value” (position)

Set scanner module parameters accordingly:

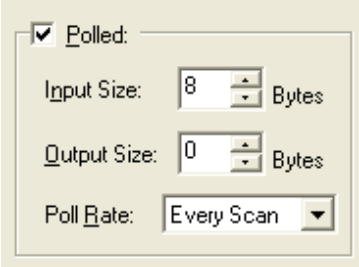

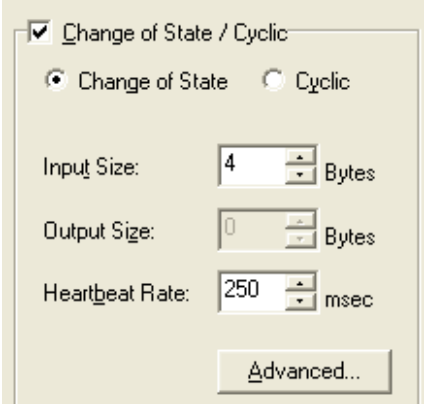

For any further information on the scanner module parameters refer to section “5.5 Using scanner module“.

Click Upload button to upload and read the current configuration.

Click Download button to send the new parameters to the encoder.

NOTE
If 20 Auto-save parameters = YES, new parameters values are saved automatically; otherwise if 20 Auto-save parameters = NO, you must start manually the “save parameters” procedure; see section “5.4 Save parameter with RSNetWorx”.

5.4 Save parameter with RSNetWorx

Properties window allows you to set device parameters.
After this operation is carried out, data is stored in RAM memory only. In case of “Node reset”, “Node restore” or power off, parameters will be lost.
To save new parameters permanently you must start the CLASS INSTANCE EDITOR; to do this right-click the encoder icon in the Graph pane and select the Class Instance Editor... command.

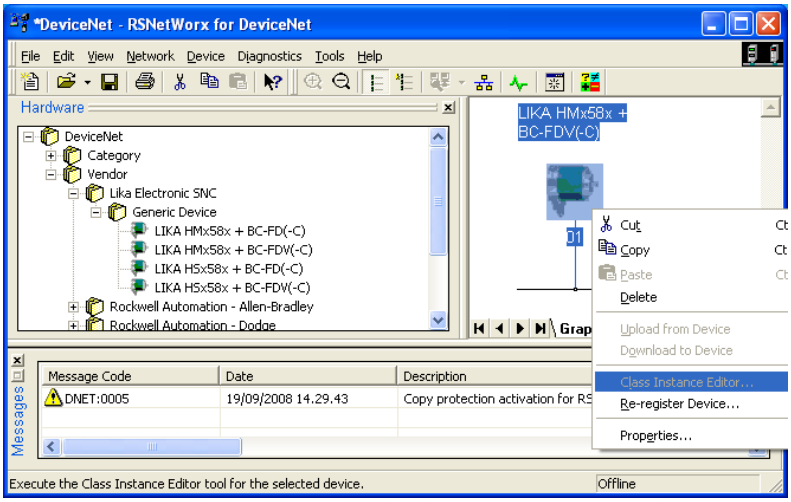

In the Class Instance Editor window enter values expressed in hexadecimal notation as shown in the Figure below. When setting up is carried out, press the Execute button: data will be downloaded to the encoder and saved.
Soon afterwards, The execution was completed message will appear to confirm that data has been downloaded and saved properly.
Close the Class Instance Editor window pressing the Close button.

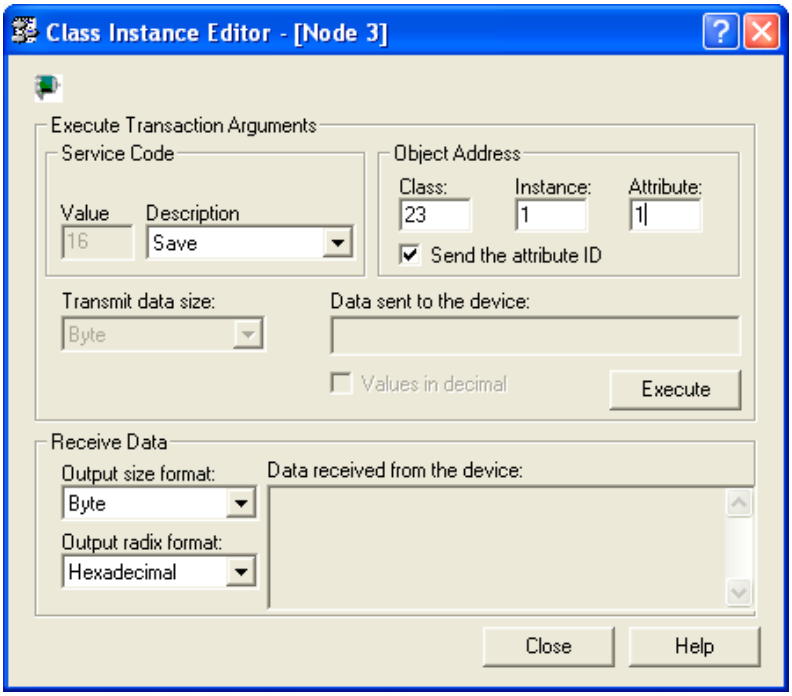

5.5 Using scanner module

To manage I/O data using the scanner module open the Properties window; if requested, upload the configuration and then open the Scanlist page.

Select Lika device in the Available Devices pane on the left and move it to the Scanlist pane on the right pressing the > button. Now double-click the item in the Scanlist pane to open the Edit I/O parameters window.

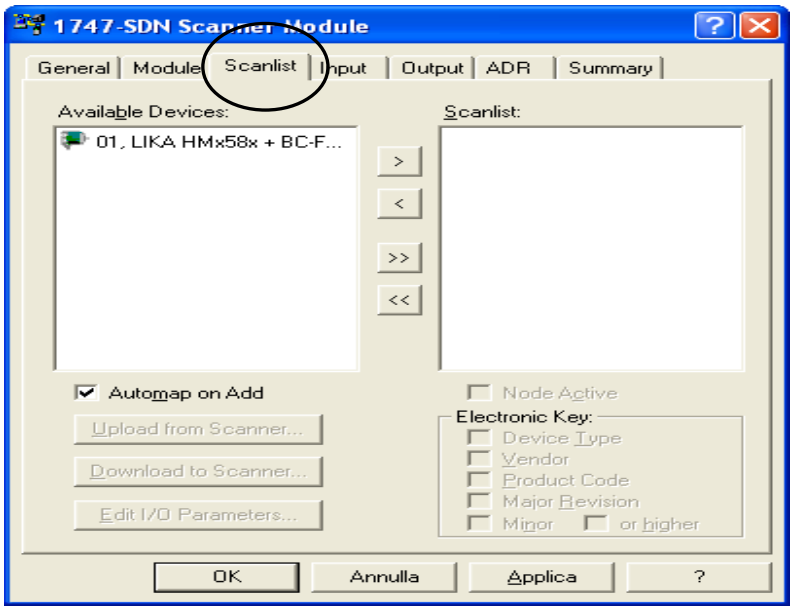

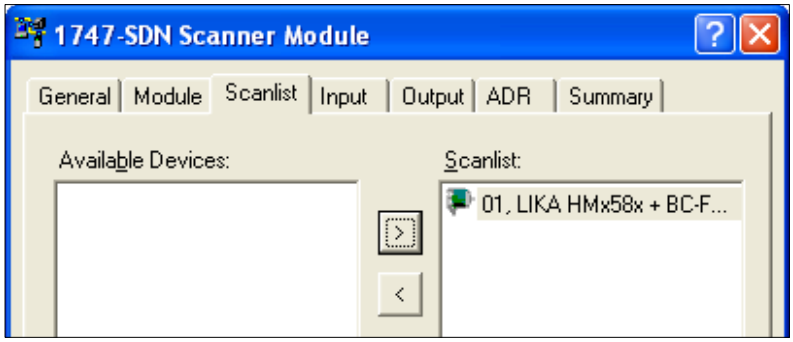

Now, set the Input Size value in both panes Polled and Change of State / Cyclic according to 16 Data Tx in Poll mode and 17 Data Tx in COS/Cyclic mode (see encoder parameters in section “5.6 Encoder parameters“).

If “Position value” is set:	Input Size = 4 bytes
if “Position value + velocity” is set	Input Size = 8 byte.

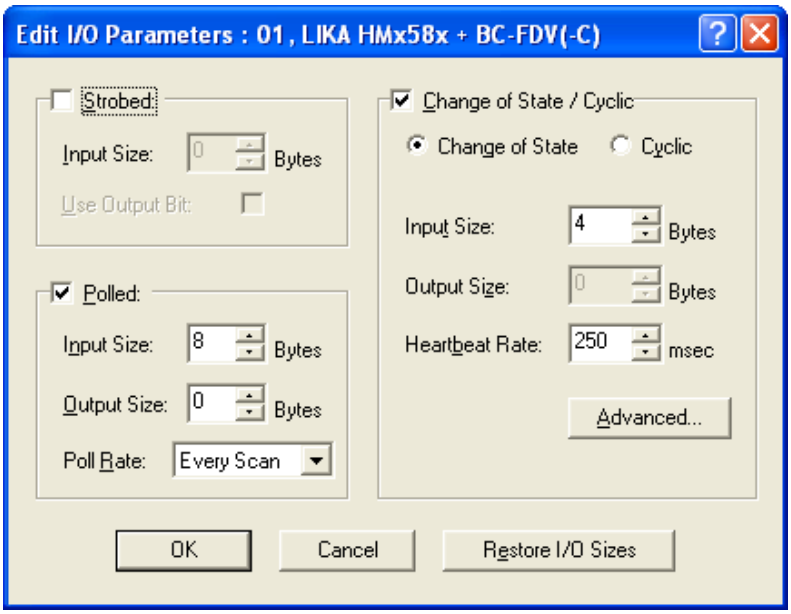

Click the OK button to confirm parameters.

The list of variables is available in the Input page.

Example
In the following example::
16 Data Tx in Poll mode = Position value + velocity
17 Data Tx in COS/Cyclic mode = Position value

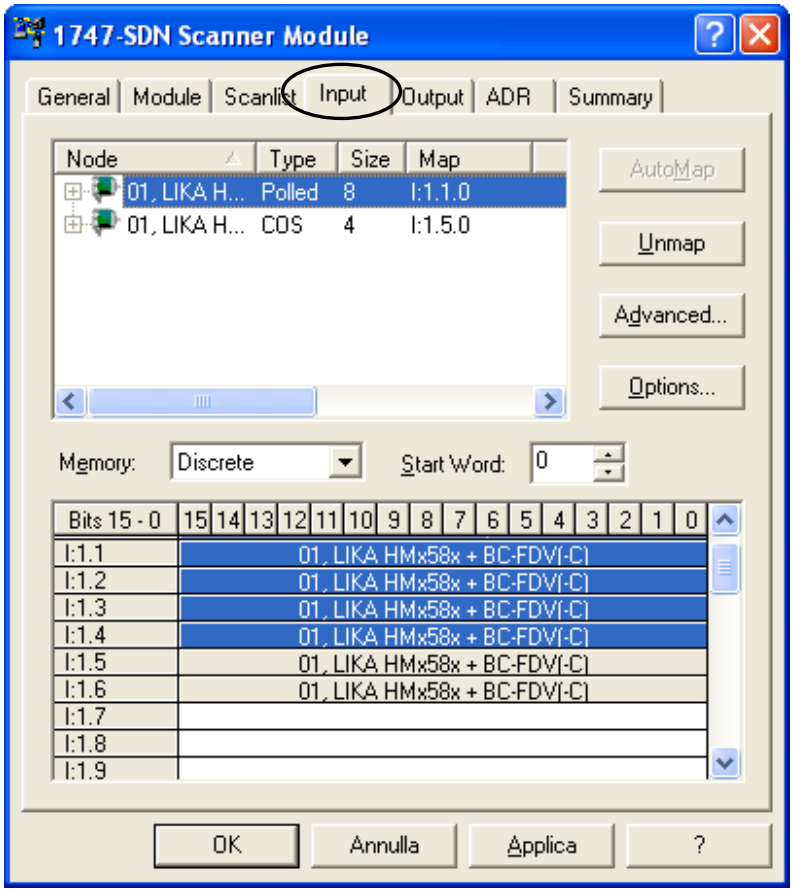

Polled messages:

Variables	Bytes	Input
1.1	1 2	Position value
1.2	3 4	
1.3	5 6	Velocity value
1.4	7 8	

COS: Messages:

Variables	Bytes	Input
1.5	1 2	Position value
1.6	3 4	

5.6 Encoder parameters

1 Position

This attribute represents the absolute position detected by the position sensor.

2 Position sensor type

Type of device.
1: Single-turn absolute rotary encoder.
2: Multi-turn absolute rotary encoder.

3 Counting direction

Counting direction. attribute sets the rotation direction of the encoder shaft and consequently defines whether the position value output by the encoder increases when the encoder shaft rotates clockwise (CW) or counterclockwise (CCW). CW and CCW rotations are viewed from shaft end.
CW: turning the shaft CW the position will increase;
CCW: turning the shaft CCW the position will increase.

4 Scaling function control

Disabled: device uses the physical (hardware) resolution (see 8 Physical resolution/revolution and 9 Physical number of revolutions).

Enabled: device uses the resolution set in 5 Measuring units/rev and 6 Total measuring range.

5 Measuring units/rev

This object sets the number of distinguishable steps per revolution.
Enabled if 4 Scaling function control = ”Enabled”.
Allowed values are equal to or lower than 8 Physical resolution/revolution value.

ATTENTION
We advise values which are power of 2 (2^n: 2, 4, …, 2048, 4096, 8192,…) to be set in 5 Measuring units/rev and 6 Total measuring range parameters in order to avoid counting errors.
If 5 Measuring units/rev and/or 6 Total measuring range parameters are changed, 7 Preset value parameter has to be set in accordance with new resolution.

6 Total measuring range

This parameter allows the operator to convert the measuring range of the encoder to a different measuring range required by the application.
Enabled if 4 Scaling function control = ”Enabled”.
Allowed values are equal to or lower than Physical total resolution.
Physical total resolution = 8 Physical resolution/revolution * 9 Physical number of revolutions.

ATTENTION
We advise values which are power of 2 (2^n: 2, 4, …, 2048, 4096, 8192,…) to be set in 5 Measuring units/rev and 6 Total measuring range parameters in order to avoid counting errors.
If 5 Measuring units/rev and/or 6 Total measuring range parameters are changed, 7 Preset value parameter has to be set in accordance with new resolution.

7 Preset value

7 Preset value function is meant to assign a certain value to a desired physical position of the encoder shaft. When the axis reaches the set physical position the 7 Preset value is transmitted.
7 Preset value must not be greater than the 6 Total measuring range to avoid run-time errors.

8 Physical resolution/revolution

This parameter defines the hardware number of distinguishable steps per revolution.
If you need to set a different resolution see 5 Measuring units/rev parameter.

9 Physical number of revolutions

This object defines the hardware number of revolutions.
Physical total resolution = 8 Physical resolution/revolution * 9 Physical number of revolutions.
If you need to set a different total resolution see 5 Measuring units/rev e 6 Total measuring range.

10 Alarms

An alarm is set when a bit indicating a fault is set to true (high).
See 11 Supported alarms values.

11 Supported alarms

This attribute contains information on supported alarms.

Bit 0 … 11	reserved	
Bit 12	Flash memory error	Internal error, it cannot be restored.
Bit 13	Machine data not valid	One or more parameters are not valid, set proper values to restore normal work condition.
Bit 14	Bus off	This bit is intended to warn that the communication in the bus network has broken (cable disconnected? Voltage drop? ...).

12 Offset value

The 12 Offset value attribute is calculated by the 7 Preset value function and shifts the 1 Position attribute using the calculated value.
Offset = 7 Preset value - “Internal Position Value”.

13 Velocity value

This attribute represents the current speed detected by the position sensor and calculated every 100 ms.

14 Velocity format

This attribute sets the engineering units for the velocity value.
steps/s: number of steps per second (default value);
rpm: revolutions per minute.

15 Dip switch

This object shows the status of the dip switches.
Dip switches are located in the connection cap and used to set the baud rate and the node ID (see sections “4.6 Baud rate: DIP A“ and “4.7 Node address: DIP B“).

16 Data Tx in Poll mode

This parameter is meant to set which input data is sent when **Polled** mode connection is enabled.
Allowed values: Position value (default value)
Position value + velocity

17 Data Tx in COS/Cyclic mode

This parameter is meant to set which input data is sent when Change Of State (COS) / Cyclic mode connection is enabled.
Allowed values: Position value
Position value + velocity

18 Alarm flags

Indicates that a fault occurred and an alarm has been activated, see 11 Supported alarms object.

19 Delta for COS

When Change Of State .

1 - **Cyclic:** Slave sends an "I/O message" cyclically. The time between two subsequent transmissions is set in the 05-Inst-09 Expected packet rate object of the cyclic mode (see section "6.5.3 Class 05h: Connection Object").

Change Of State(COS) mode connection is enabled, this parameter sets the minimum gap between two I/O messages. Values too low could cause the Bus network to saturate.

20 Auto-save parameters

Yes: when a new parameter is set, the encoder waits 5 seconds and then saves automatically all new values on EPROM.

No: new parameters are not saved on EPROM automatically. To save new values Class Instance Editor must be used (default value; see section "5.4 Save parameter with RSNetWorx).

6. DeviceNet interface

Datalogic encoders are “Group 2 only server” devices and do not support UCMM messages.
For any omitted information refer to the “Open DeviceNet Vendor Association” documents or visit www.odva.org.

6.1 EDS file

DeviceNet encoders are supplied with their own EDS file **AMT58-xxx-16x14-FBUS-DN** (see enclosed documentation or click www.datalogic.com). EDS file has to be installed on Master device.

6.2 Communication messages

Structure of the communication messages:

CAN-ID	CAN Data bytes
11 bit	from 3 to 8 bytes

Datalogic DeviceNet encoders support two kinds of communication messages:

- I/O messages: I/0 messages are high priority messages. Their meaning is explained in the “Message-ID”. Slave device uses these messages to send process data. For further information see section 6.3 I/O Messages (Msg group 1)” on page 27.

- Explicit messages: Explicit messages are low priority messages. They are used to start and close communications between Master and Slave, to read and write Slave configurations and to send diagnostic messages. For further information see section “6.4 Explicit Messages (Msg group 2)” on page 27.

Structure of Master-Slave communication:

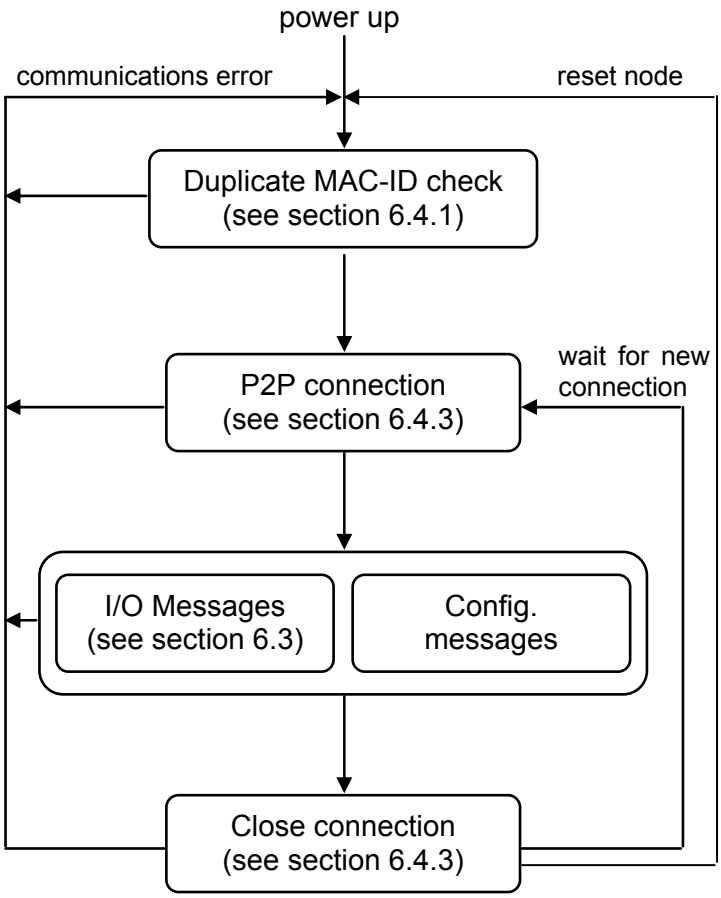

NOTE
Lika encoders accept only one P2P connection at a time.
Simultaneous or multiple P2P connections are rejected.

6.3 I/O Messages (Msg group 1)

I/0 messages are used by Lika devices to send the position and the velocity values. The “Message-ID” shows how the message is transmitted.

Position:

CAN-ID			4 CAN Data bytes			
10	9…6	5…0	Byte 0	Byte 1	Byte 2	Byte 3
0	Msg ID	Source ID	$2^7 \ldots 2^0$	$2^{15} \ldots 2^8$	$2^{23} \ldots 2^{16}$	$2^{31} \ldots 2^{24}$
			Low	…	…	High

Position and velocity:

CAN-ID			8 CAN Data bytes							
10	9…6	5…0	Position				Velocity			
0	Msg ID	Source ID	B 0	B 1	B 2	B 3	B 4	B 5	B 6	B 7
			Lo	…	…	Hi	Lo	…	…	Hi

Msg-ID:
1100_2: Slave's I/O Multicast Poll Response Msg
1101_2: Slave's I/O Change Of State or Cyclic Msg
1111_2: Slave's I/O Poll Rsp/COS/Cyclic Ack Msg

Source-ID: device address.
Byte 0 … Byte 3: position value.

Available Slave transmission modes:

2 - **Polled**: Master device sends a polled request and Slave device replies sending its position value.
If the expected packet rate of polled mode is null (see 05-Inst-09 Expected packet rate), communication is always active and time-out status is never triggered; otherwise if the Slave does not receive any message from the Master within the time set in the 05-Inst-09 Expected packet rate object, then communication is closed (time-out status).

3 - **Cyclic:** Slave sends an “I/O message” cyclically. The time between two subsequent transmissions is set in the 05-Inst-09 Expected packet rate object of the cyclic mode (see section “6.5.3 Class 05h: Connection Object“).

4 - **Change Of State**: Slave sends an “I/O message” every time its status changes or at every heartbeat rate.

Slave can use one of the afore-mentioned “I/O messages” transmission modes only if a peer-to-peer (P2P) connection is arranged with the Master (using an “Explicit Messages Connection”, see section “6.4..3 Explicit Messages Connection”).

6.4 Explicit Messages (Msg group 2)

These messages are used to:

- perform a duplicate MAC-ID check (see section “6.4.1 Duplicate MAC-ID check“)
- send error messages (see section “6.4.2 Error messages”)
- arrange an explicit message connection: peer-to-peer (P2P) between Master and Slave (see section “6.4.3 Explicit Messages Connection“);
- arrange a message data transfer: send/receive data configuration (see section “6.4.4 Message data transfer”“).

CAN-ID table of explicit message:

bit	10	9	8	7	6	5	4	3	2	1	0
	1	0	MAC-ID						Msg-ID		

MAC-ID: device address.

Msg-ID:
000_2: Master's I/O Bit-Strobe Command Msg
001_2: Master's I/O Multicast Poll Command Msg
010_2: Master's I/O COS / Cyclic Acknowledge Msg
011_2: Slave's Explicit / Unconnected Response Msg
100_2: Master's Connected Explicit Request Msg
101_2: Master's I/O Poll Command / COS
110_2: Group 2 only Unconnected Explicit Request Msg
111_2: Duplicate MAC-ID Check Msg

6.4.1 Duplicate MAC-ID check

This function is used to check, when a device is connected to the DeviceNet network, whether its serial number, node-ID and vendor-ID are single (univocal) in the network.

Message structure:

CAN-ID											
bit	10	9	8	7	6	5	4	3	2	1	0
	1	0	MAC-ID						1	1	1

7 CAN Data bytes								
Byte	bit7	bit6	bit5	bit4	bit3	bit2	bit1	bit0
0	R/R	port number						
1	vendor-ID - Low byte							
2	vendor-ID - High byte							
3	serial number - Low byte							
4	serial number							
5	serial number							
6	serial number - High byte							

R/R bit = 0: duplicate MAC-ID check request. This message is sent by a device to all nodes in the network.
1: duplicate MAC-ID check response. This message is sent back to sender by the node in the network having the same MAC-ID.

Port number = 0: device that allows only one P2P connection.

When serial number, node-ID and vendor-ID are not single (univocal) in the network, an error message is generated and the device that sent the “duplicate MAC-ID check request” switches to “Unrecoverable fault” status (MS LED = red, see section “4.8 Diagnostic LEDS” and attribute 01-01-05 Status).

6.4.2 Error messages

These messages are meant to warn about device faults.

Message structure:

Byte	bit7	bit6	bit5	bit4	bit3	bit2	bit1	bit0
0	F=0	0	Master MAC-ID					
1	R/R= 1	Service Code = 14h						
2	General error code							
3	Specific service error code							

General error codes

General Status Code (in hex)	Status name	Description of Status
00h	No error	Service was successfully performed by the object specified.
02h	Resource unavailable	Resources needed for the object to perform the requested service were unavailable.
03h	Invalid parameter value	A parameter associated with the request was invalid. This code is used when a parameter does not meet the requirements of this specification and/or the requirements defined in an Application Object Specification.
08h	Service not supported	The requested service was not implemented or was not defined for this Object Class/Instance.
09h	Invalid attribute value	Invalid attribute data detected
0Bh	Already in requested mode / state	The object is already in the mode/state being requested by the service.
0Ch	Object state conflict	The object cannot perform the requested service in its current mode/state.
0Eh	Attribute not settable	A request to modify a non-modifiable attribute was received.

10h	Device state conflict	The device's current mode/state prohibits the execution of the requested service.
13h	Not enough data	The service did not supply enough data to perform the specified operation.
14h	Attribute not supported	The attribute specified in the request is not supported.
15h	Too much data	The service supplied more data than was expected.
16h	Object does not exist	The object specified does not exist in the device.
20h	Invalid parameter	A parameter associated with the request was invalid. This code is used when a parameter does not meet the requirements of this specification and/or the requirements defined in an Application Object Specification.

For any further information on general error codes refer to the publication "The CIP Networks Library. Volume I. Common Industrial Protocol (CIP™)".

6.4.3 Explicit Messages Connection

These messages are meant to open and close P2P connections between Master and Slave. This is necessary to allow the Slave both to communicate process data using “I/O Messages” and communicate or change parameters using “Data transfer” messages.

Open connection request:

Byte	bit7	bit6	bit5	bit4	bit3	bit2	bit1	bit0
0	F=0	0	Master MAC-ID					
1	R/R=0	Service Code = 4Bh						
2	Class ID = 03h							
3	Instance ID = 01h							
4	Allocation Choice *							
5	Master MAC-ID							

Open connection response:

Byte	bit7	bit6	bit5	bit4	bit3	bit2	bit1	bit0
0	F=0	0	Master MAC-ID					
1	R/R=1	Service Code = 4Bh						
2	General error code							

Close connection request:

Byte	bit7	bit6	bit5	bit4	bit3	bit2	bit1	bit0
0	F=0	0	Master MAC-ID					
1	R/R=0	Service Code = 4Ch						
2	Class ID = 03h							
3	Instance ID = 01h							
4	Release choice = Allocation Choice *							

Close connection response:

Byte	bit7	bit6	bit5	bit4	bit3	bit2	bit1	bit0
0	F=0	0	Master MAC-ID					
1	R/R=1	Service Code = 4Ch						
2	General error code							

* Allocation choice:

bit 7	Reserved
bit 6	Ack suppression
bit 5	Cyclic
bit 4	Change of status

bit 3	Multi polled
bit 2	Bit strobe
bit 1	Polled
bit 0	Explicit message

Example
Allocation choice =
01h: used to read and write configuration parameters without “I/O Messages”.
03h: activate Polled communication.
61h: activate Cyclic mode communication without ACK.

6.4.4 Message data transfer

These messages are meant to set, read, save or restore configuration parameters.

Data transfer request:

Byte	bit7	bit6	bit5	bit4	bit3	bit2	bit1	bit0
0	F=0	0	Master MAC-ID					
1	R/R=0	Service Code						
2	Class ID							
3	Instance ID							
4	Attribute ID							
5…7	Data byte							

Data transfer response:

Byte	bit7	bit6	bit5	bit4	bit3	bit2	bit1	bit0
0	F=0	0	Master MAC-ID					
1	R/R=1	Service Code						
2…7	Data byte							

Service code, Class ID, Instance ID and Attribute ID are meant to set the type and content of data bytes. They must be specified according to the “Object dictionary” (see section “6.5 Object dictionary“).

6.5 Object dictionary

In the following pages the objects implemented are listed and described as follows:

Class-Instance-Attribute Object name
[var, access]

- Class, instance and attribute are expressed in hexadecimal notation.
- Var: data type variable
  USINT: unsigned single integer 8 bit (1 byte)
  UINT: unsigned integer 16 bit (2 bytes)
  UDINT: unsigned double integer 32 bit (4 bytes)
  WORD: 16 bit specify (2 bytes)
- Access type: ro = read only access
  rw = read and write access

NOTE
All data bytes are sent from less significant byte (LSB) to most significant byte (MSB).

Example

UDINT (4 data bytes):

Byte	bit7	bit6	bit5	bit4	bit3	bit2	bit1	bit0
0	F=0	0	Master MAC-ID					
1	R/R=1	Service Code						
2	Data byte - Low byte							
3	Data byte							
4	Data byte							
5	Data byte - High byte							

6.5.1 Class 01h: Identity Object

This object provides identification and general information on the device.

Supported Service codes:
0Eh = Get_Attribute_Single: used to read the connection class attribute value.

Supported Instances: 01h = Explicit Message

01-01-01 Vendor-ID

[UINT, ro]
Identification of each vendor by number.
Default = 0299h

01-01-02 Device type

[UINT, ro]
Default = 00h: general type.

01-01-03 Product code

[UINT, ro]
Identification of a particular product of an individual vendor.

01-01-04 Revision

[UINT, ro]
Hardware and software revisions, the Identity Object represents:

LSByte	MSByte
major revision	minor revision

01-01-05 Status

[WORD, ro]
This attribute represents the current status of the device. Its value changes as the state of the device changes. Bit definitions are as follows:

Bit(s)	Called	Definition
0	Owned	TRUE indicates the device (or an object within the device) has an owner. Within the Master/Slave paradigm the setting of this bit means that the Predefined Master/Slave Connection Set has been allocated to a Master. Outside the Master/Slave paradigm the meaning of this bit is TBD.
1	Reserved	Reserved, shall be 0
2	Configured	TRUE indicates the application of the device has been configured to do something different than the “out–of–box” default. This shall not include configuration of the communications.
3	Reserved	Reserved, shall be 0

4-7	Extended Device status	Bits are defined as follows:	
		0000	Self-Testing or Unknown
		0	Firmware Update in Progress
		0	At least one faulted I/O connection
		0	No I/O connections established
		0	Non-Volatile Configuration bad
		0	Major Fault – either bit 10 or bit 11 is true (1)
		0	At least one I/O connection in run mode
		0	At least one I/O connection established, all in idle mode
		1 0 0 0 1 0 0 1	Reserved, shall be 0
		1 0 1 0 … 1 1 1 1	Vendor/Product specific
8	Minor Recoverable fault	TRUE indicates the device detected a problem with itself, which is thought to be recoverable. The problem does not cause the device to go into one of the faulted states.	
9	Minor Unrecoverable fault	TRUE indicates the device detected a problem with itself, which is thought to be unrecoverable. The problem does not cause the device to go into one of the faulted states.	
10	Major Recoverable fault	TRUE indicates the device detected a problem with itself, which caused the device to go into the "Major Recoverable Fault" state.	
11	Major Unrecoverable fault	TRUE indicates the device detected a problem with itself, which caused the device to go into the "Major Unrecoverable Fault" state.	
12-15	Reserved	Reserved, shall be 0	

For any further information on status instance attribute refer to the publication "The CIP Networks Library. Volume I. Common Industrial Protocol (CIP™)".

01-01-06 Serial number

[UDINT, ro]
This attribute is a number used in conjunction with the Vendor ID to form a unique identifier for each device on any CIP network.

01-01-07 Product name

[SHORT_STRING, ro]
Default = 05 4C 49 4B 41 20h = "AMT58"

6.5.2 Class 03h: DeviceNet Object

This DeviceNet Object is meant to provide the configuration and status of the physical node connected to DeviceNet network.

Supported Service code:
0Eh = Get_Attribute_Single: used to read connection class attribute value.
10h = Set_Attribute_Single: used to write connection class attribute value.
Supported Instance: 01h = Explicit Message

03-01-01 Node Address

[USINT, ro]
This attribute contains the MAC-ID of the device.
To set the node address see section “4.7 Node address: DIP B”

03-01-02 Baud rate

[USINT, ro]
This attribute sets the baud rate.

Binary value	Baud rate
00	125 Kbit/s
10	250 Kbit/s
01	500 Kbit/s (default)

To set the baud rate see section “” on page 10.

03-01-03 Bus-off interrupt

[BOOL, ro]
This attribute sets how the device has to act after a bus-off event.
00: when a bus-off event occurs, device resets and hold the bus-off (reset) status.
01: when a bus-off event occurs, device resets and then tries to get the previous communication status.
Default = 01h

03-01-04 Bus-off counter

[USINT, ro]
This attribute shows the number of triggered bus-off events.
Default = 00h

03-01-05 Allocation information

[UINT, ro]
1st byte: “Allocation choice”: indicates which “Predefined Master/Slave Connections” is active.
2nd byte: “Master’s MAC-ID” contains the MAC-ID of the device that has allocated the “Predefined Master/Slave Connection”.
The FFh value means the “Predefined Master/Slave Connection” has not been allocated (no communication active).

6.5.3 Class 05h: Connection Object

The Connection Class allocates and manages the internal resources associated to both “I/O Messages” and “Explicit Messaging Connections”.

Supported Service code:
0Eh = Get_Attribute_Single: used to read connection class attribute value.
10h = Set_Attribute_Single: used to write connection class attribute value.

Supported Instance: 01h = Explicit Message
02h = **Polled**
04h = .
5 - **Cyclic:** Slave sends an “I/O message” cyclically. The time between two subsequent transmissions is set in the 05-Inst-09 Expected packet rate object of the cyclic mode (see section “6.5.3 Class 05h: Connection Object“).
Change Of State (COS) / Cyclic**Errore. L'origine riferimento non è stata trovata.**

05-Inst-01 Connection status

[USINT, ro]
This attribute defines the current status of the Connection instance. Value = 03 means the connection has been configured correctly.

05-Inst-02 Instance type

[USINT, ro]
00h: Explicit messaging
01h: I/O messaging

05-Inst-03 TransportClass_trigger

[BYTE, ro]
Defines whether this is a producing only, consuming only, or both producing and consuming connection.

05-Inst-04 Produced connection ID

[UINT, ro]
This is the value that will be specified in the CAN Identifier Field when this Connection transmits.

05-Inst-05 Consumed connection ID

[UINT, ro]
This is the CAN Identifier Field value that is associated to the messages this Connection Object receives.

05-Inst-06 Initial comm. Characteristics

[USINT, ro]
Defines the Message Group(s) the sent and received messages are related to.

Default = 21h

05-Inst-07 Produced connection size

[UINT, ro]
Maximum number of bytes transmitted in this connection.

05-Inst-08 Consumed connection size

[UINT, ro]
Maximum number of bytes received in this connection.

05-Inst-09 Expected packet rate

[UINT, rw]
This attribute is meant to set the time between two subsequent “I/O message” transmissions (Transmission Trigger Timer) and the Inactivity/Watchdog Timer.

05-Inst-0C Watchdog time-out action

[USINT, ro]
This attribute defines the action the Connection Object should perform when the Inactivity/Watchdog Timer gap has expired.
Default = 01h: the Connection Class automatically closes the connection after the Inactivity/Watchdog Timer gap has expired.

05-Inst-0D Produced connection path length

[UINT, ro]
This attribute specifies the number of bytes the 05-Inst-0E Produced connection path attribute is fitted with.

05-Inst-0E Produced connection path

[EPATH, ro]
This attribute is fitted with a byte stream which defines the Application Object(s) whose data is to be produced by this Connection Object.

05-Inst-0F Consumed connection path length

[UINT, ro]
This attribute specifies the number of bytes the 05-Inst-10 Consumed connection path attribute is fitted with.

05-Inst-10 Consumed connection path

[EPATH, ro]
This attribute is fitted with a byte stream which defines the Application Object(s) whose data is to be received by this Connection Object.

05-Inst-11 Production inhibit time

[UINT, ro]
Default = 00h: no inhibit time

NOTE
To save the parameters execute the “Save parameters” function (see Save parameter in the section “7.1 Read and set parameters”).
When the power is turned off or in case of “Reset node” and “Restore node” commands, parameters not saved are lost.

6.5.4 Class 23h: Position Sensor Object

This class is meant to describe the objects used by the device to calculate the transmitted position values.

Supported Service code:
05h = Reset: resets all parameter values to the factory default values (without saving them on flash memory).
0Eh = Get_Attribute_Single: used to read connection class attribute value.
10h = Set_Attribute_Single: used to write connection class attribute value.
15h = Restore: restores all parameter values from flash memory (without saving them).
16h = Save: saves all parameters to non-volatile memory.

Supported Instance: 01h = Explicit Message

23-01-03 Position value

[UDINT, ro]
This attribute represents the absolute position detected by the position sensor.

23-01-0B Device type

[UINT, ro]
0001h: single-turn absolute rotary encoder;
0002h: multi-turn absolute rotary encoder.

23-01-0C Code sequence

[BOOL, rw]
23-01-0C code sequence attribute sets the rotation direction of the encoder shaft and consequently defines whether the position value output by the encoder increases when the encoder shaft rotates clockwise (CW) or counterclockwise (CCW). CW and CCW rotations are viewed from shaft end.
00: turning the shaft CW the position will increase;
01: turning the shaft CCW the position will increase.

23-01-0E Scaling function control

[BOOL, rw]
If this object is disabled (OFF=00), device uses the physical resolution (see attributes 23-01-2A Hardware counts per revolution and 23-01-2B Hardware number of turns); if it is enabled (ON=01), it uses the resolution set in attributes 23-01-10 Resolution per revolution and 23-01-11 Total measuring range with the following relation:

$$posTx = \frac{"23\text{-}01\text{-}10"}{"23\text{-}01\text{-}2A"} \cdot posReale \leq "23\text{-}01\text{-}11"$$

Default = 00h

23-01-10 Resolution per revolution

[UDINT, rw]
This object sets the number of distinguishable steps per revolution.
Enabled if = ”1”.

To avoid counting errors, check $\frac{\text{"23-01-2A"}}{\text{"23-01-10"}}$ is an integer value.

Allowed values are equal to or lower than value.

23-01-11 Total measuring range

[UDINT, rw]
This parameter sets the number of distinguishable steps over the total measuring range.
Enabled if = ”1”.
Allowed values are equal to or lower **Total hardware resolution** value.

Example

Multiturn encoder HM5816/16384FB-6 with connection cap “BC-FDV-C”.

Resolution is:

- 23-01-2A Hardware counts per revolution = 65536 (216)
- 23-01-2B Hardware number of turns = 16384 (214)
- **Total hardware resolution**: = 1073741824 (230)

2048 counts/rev. * 1024 turns are required:

- Enable 23-01-0E Scaling function control = 01
- 23-01-10 Resolution per revolution = 2048 (0000 0800h)
- 23-01-11 Total measuring range =2048*1024=2097152 (0020 0000h)

ATTENTION
To avoid counting errors we recommend values which are power of 2 (2^n: 2, 4,…, 2048, 4096, 8192,…) to be set in 23-01-10 Resolution per revolution and 23-01-11 Total measuring range parameters.
If 23-01-10 Resolution per revolution and/or 23-01-11 Total measuring range values change, then also 23-01-13 Preset value attribute should be updated and set according to the new resolution.

23-01-13 Preset value

[UDINT, rw]

23-01-13 Preset value function is meant to assign a certain value to a desired physical position of the encoder shaft. When the axis reaches the set physical position, then the 23-01-13 Preset value value is transmitted. 23-01-13 Preset value must not be greater than the **Total hardware resolution** to avoid runtime errors.

23-01-14 Delta for COS

[UDINT, rw]

When .

Cyclic: Slave sends an “I/O message” cyclically. The time between two subsequent transmissions is set in the 05-Inst-09 Expected packet rate object of the cyclic mode (see section “6.5.3 Class 05h: Connection Object“).

Change Of State (COS) mode connection is enabled, this parameter sets the minimum gap between two I/O messages. Values too low could cause the Bus network to saturate.

Default = 05h.

23-01-18 Velocity value

[UDINT, ro]

This attribute represents the current speed detected by the position sensor and calculated every 100 ms.

23-01-19 Velocity format

[USINT, rw]

This attribute identifies the engineering units for the velocity value.

00: steps/s number of steps per second

01: rpm revolutions per minute

23-01-2A Hardware counts per revolution

[UDINT, ro]

This object defines the hardware number of distinguishable steps per revolution. To set different values see 23-01-10 Resolution per revolution attribute.

23-01-2B Hardware number of turns

[UINT, ro]

This object defines the hardware number of distinguishable revolutions.

Total hardware resolution = □ .

To set different values see attributes 23-01-10 Resolution per revolution and 23-01-11 Total measuring range.

23-01-2C Alarms

[WORD, ro]

An alarm is set when a bit indicating a fault is set to true (high).

See 23-01-2D Supported alarms values.

23-01-2D Supported alarms

[WORD, ro]
This attribute contains information on supported alarms.

Bits 0…11	Reserved	
Bit 12	Flash memory error	Internal error, it cannot be restored.
Bit 13	Machine data not valid	One or more parameters are not valid, set proper values to restore normal work condition.
Bit 14	Bus off	This bit is intended to warn that the communication in the bus network has broken (cable disconnected? Voltage drop? ...).

23-01-2E Alarm flags

[BOOL, ro]
Indicates that a fault occurred and an alarm has been triggered, see 23-01-2D Supported alarms object.

23-01-33 Offset

[DINT, ro]
The 23-01-33 Offset attribute is calculated by the preset function and shifts the 23-01-03 Position value attribute using the calculated value.
Offset = 23-01-13 Preset value - “Internal Position Value”

23-01-65 Dip switch

[UINT, ro]
This object shows the status of the dip switches.
Dip switches are located in the connection cap and used to set the baud rate and the MAC-ID (see sections “4.6 Baud rate: DIP A“ and “4.7 Node address: DIP B“).
MAC-ID: bits 0 … 5;
Baud Rate: bits 8 … 9.

23-01-66 Data Tx in Poll mode

[USINT, rw]
This parameter is meant to set which input data is sent when **Polled** mode connection is enabled.
00: Position value
01: Position value + velocity

23-01-67 Data Tx in COS/Cyclic mode

[USINT, rw]

This parameter is meant to set which input data is sent when Change Of State (COS) / Cyclic mode connection is enabled.

00: Position value

01: Position value + velocity

23-01-68 Auto-save parameters

[BOOL, rw]

Yes: when new parameters are set, the encoder waits 5 seconds and then saves automatically all new values on EPROM.

No: new parameters are not saved on EPROM automatically.
To save new values, Class Instance Editor must be used (default value; see section “5.4 Save parameter with RSNetWorx“).

NOTE

To save new parameters execute the “Save parameters” function (see **Errore. L'origine riferimento non è stata trovata.**section “7.1 Read and set parameters“).

When the power is turned off or in case of “Reset node” and “Restore node” commands, parameters not saved are lost.

6.5.5 Class 2Bh: Acknowledge Handler Object

This class is meant to manage the receipt of acknowledgement messages.

Supported Service code:
0Eh = Get_Attribute_Single: used to read connection class attribute value.
10h = Set_Attribute_Single: used to write connection class attribute value.

Supported Instance: 01h = Explicit Message

2B-01-01 Acknowledge timer

[UINT, rw]
After a Master request, Slave waits for the set acknowledgement time before sending back a reply.
Default = 10h: 16ms

2B-01-02 Retry Limit

[USINT, rw]
Number of Ack Timeouts after which the application informs the Master that a RetryLimit_Reached event occurred.

2B-01-03 Connection Instance of COS

[UINT, rw]
Connection Instance which contains the path where the Ack Handler events will be notified.

7 Setup

Here follow some examples of parameters reading and setting; data exchange between Master and Slave device is highlighted. A generic "ID" value is used to indicate the encoder address; Master address is always assumed to be 0.

All values are written in hexadecimal notation.
Abbreviations: (ID<<3): 3 bits left logic shift
Ms: Master ID
FC: Fragmented message counter
SC: Service Code
Cl: Class
Ins: Instance
AC: Allocation Choice
At: Attribute
Err: Error code

7.1 Read and set parameters

P2P Master/Slave connection (without I/0 msg)

Master → Encoder (request)

CAN-ID	6 Data byte							
406+(ID<<3)	Ms	SC	Cl	Ins	AC	Ms		
	00	4B	03	01	01	00		

Encoder → Master (response)

CAN-ID	3 Data byte							
403+(ID<<3)	Ms	SC	Err					
	00	CB	00					

Read position 23-01-03 Position value (in "Object dictionary")

Master → Encoder

CAN-ID	5 Data byte							
404+(ID<<3)	Ms	SC	Cl	Ins	At			
	00	0E	23	01	03			

Encoder → Master

CAN-ID	6 Data byte							
403+(ID<<3)	Ms	SC	position					
	00	8E	Low	…	…	High		

7.1.1 Set 23-01-13 Preset value

Master → Encoder (1st message)

CAN-ID	8 Data byte							
404+(ID<<3)	Ms	FC	SC	Cl	Ins	At	preset	
	80	00	10	23	01	13	Low	…

Encoder → Master (1st message received)

CAN-ID	3 Data byte							
403+(ID<<3)	Ms	SC	Err					
	80	C0	00					

Master → Encoder (2nd message)

CAN-ID	4 Data byte							
404+(ID<<3)	Ms	FC	preset					
	80	81	…	Hi				

Encoder → Master (2nd message received)

CAN-ID	3 Data byte							
403+(ID<<3)	Ms	SC	Err					
	80	C1	00					

Encoder → Master (parameter value accepted)

CAN-ID	3 Data byte							
403+(ID<<3)	Ms	SC	Err					
	00	90	00					

7.1.2 Save parameter

Master → Encoder

CAN-ID	5 Data byte							
404+(ID<<3)	Ms	SC	Cl	Ins	At			
	00	16	23	01	01			

Encoder → Master

CAN-ID	3 Data byte							
403+(ID<<3)	Ms	SC	Err					
	00	96	00					

7.1.3 Close Master/Slave connection

Master → Encoder

CAN-ID	5 Data byte							
406+(ID<<3)	Ms	SC	Cl	Ins	AC			
	00	4C	03	01	01			

Encoder → Master

CAN-ID	3 Data byte							
403+(ID<<3)	Ms	SC	Err					
	00	CC	00					

7.2 Set Cyclic mode without velocity

P2P Master/Slave connection

Master → Encoder (request)

CAN-ID	6 Data byte							
406+(ID<<3)	Ms	SC	Cl	Ins	AC	Ms		
	00	4B	03	01	61	00		

Encoder → Master (response)

CAN-ID	3 Data byte							
403+(ID<<3)	Ms	SC	Err					
	00	CB	00					

Set 05-Inst-09 Expected packet rate for Cyclic mode (milliseconds)

Master → Encoder

CAN-ID	7 Data byte							
404+(ID<<3)	Ms	SC	Cl	Ins	At	Ctime		
	00	10	05	04	09	Low	Hi	

Encoder → Master

CAN-ID	3 Data byte							
403+(ID<<3)	Ms	SC	Err					
	00	90	00					

From now on, the encoder sends I/0 message at intervals set in Ctime object until the connection will be closed or 05-Inst-09 Expected packet rate attribute will be modified.

Encoder → Master

CAN-ID	4 Data byte							
340+ID	position							
	Low	…	…	Hi				

Absolute Encoders

AMT58...16x14 PB

Profibus-DP Profile for Encoders

Instruction Manual

Datalogic S.r.l.
Via S. Vitalino 13
40012 Calderara di Reno
Bologna - Italy

© 2014 - 2017 Datalogic S.p.A. and/or its affiliates ◆ ALL RIGHTS RESERVED. ◆ Without limiting the rights under copyright, no part of this documentation may be reproduced, stored in or introduced into a retrieval system, or transmitted in any form or by any means, or for any purpose, without the express written permission of Datalogic S.p.A. and/or its affiliates.

Datalogic and the Datalogic logo are registered trademarks of Datalogic S.p.A. in many countries, including the U.S.A. and the E.U.

All other trademarks and brands are property of their respective owners. Datalogic reserves the right to make modifications and improvements without prior notification.

16/06/17

INDEX

1. Safety summary 1
2. Identification 3
3. Mounting instructions 4
3.1 Solid shaft encoders 4
3.1.1 Customary installation 4
3.1.2 Fissaggio con graffe (codice ST-58-KIT) 4
3.2 Hollow shaft encoders 6
3.2.1 AMT58-H15 6
4. Electrical connections 7
4.1 Connection cap 7
4.2 Ground connection 8
4.3 Connection cap with PG gland 8
4.4 Connection cap with M12 connectors 9
4.5 Connection of the shield 10
4.6 Bus termination resistance 10
4.7 Baud rate 10
4.8 Node number: DIP A 11
4.9 Diagnostic LEDs 12
5. Quick reference 13
5.1 STEP7 configuration 13
5.1.1 Importing GSD file 13
5.1.2 Adding a node to the project 14
5.1.3 Encoder configuration parameters 14
5.2 Reading diagnostic information 16
5.3 Setting the Preset value 18
5.4 Set node number via BUS 19
6. Profibus® interface 20
6.1 GSD file 20
6.2 Classes of the Device profile 20
6.3 Modes of operation 21
6.4 DDLM_Set_Prm 22
6.4.1 Byte 10 - Operating parameters 23
Code sequence 23
Class 2 functionality 24
Scaling function control 24
Diagnostic type 24
Exchange type 24
6.4.2 Bytes 11…14 25
Counts per revolution 25
6.4.3 Bytes 15…18 26
Total resolution 26
Velocity measure unit 28
6.5 DDLM_Chk_Cfg 28
6.6 DDLM_Data_Exchange 28
Position value 28
Position and velocity values 29
Preset value 29
6.7 DDLM_Slave_Diag 31
6.8 Set_Slave_Address (service SAP55) 33
6.9 "Red Zone" 34

Subject index

C
Class 2 functionality 24
Code sequence 23
Counts per revolution 25
D
Diagnostic type 24
E
Exchange type 24
P
Position and velocity values 29
Position value 28
Preset value 29
S
Scaling function control 24
T
Total resolution 26
V
Velocity measure unit 28

Typographic and iconographic conventions

In this guide, to make it easier to understand and read the text the following typographic and iconographic conventions are used:

- parameters and objects both of the device and the interface are coloured in ORANGE;
- alarms are coloured in RED;
- states are coloured in FUCSIA.

When scrolling through the text some icons can be found on the side of the page: they are expressly designed to highlight the parts of the text which are of great interest and significance for the user. Sometimes they are used to warn against dangers or potential sources of danger arising from the use of the device. You are advised to follow strictly the instructions given in this guide in order to guarantee the safety of the user and ensure the performance of the device. In this guide the following symbols are used:

	This icon, followed by the word WARNING, is meant to highlight the parts of the text where information of great significance for the user can be found: user must pay the greatest attention to them! Instructions must be followed strictly in order to guarantee the safety of the user and a correct use of the device. Failure to heed a warning or comply with instructions could lead to personal injury and/or damage to the unit or other equipment.
	This icon, followed by the word NOTE, is meant to highlight the parts of the text where important notes needful for a correct and reliable use of the device can be found. User must pay attention to them! Failure to comply with instructions could cause the equipment to be set wrongly: hence a faulty and improper working of the device could be the consequence.
	This icon is meant to highlight the parts of the text where suggestions useful for making it easier to set the device and optimize performance and reliability can be found. Sometimes this symbol is followed by the word EXAMPLE when instructions for setting parameters are accompanied by examples to clarify the explanation.

Preliminary information

This guide is designed to describe the technical characteristics, installation and use of the Profibus encoders of the AMT58-PB series. For any further information please refer to the product datasheet.

To make it easier to read the text, this guide is divided into two main sections.
In the first section general information concerning the safety, the mechanical installation and the electrical connection as well as tips for setting up and running properly and efficiently the unit are provided.
In the second section, entitled Profibus Interface, both general and specific information is given on the Profibus interface. In this section the interface features and the parameters implemented in the unit are fully described.

1. Safety summary

Safety

- Always adhere to the professional safety and accident prevention regulations applicable to your country during device installation and operation;
- installation and maintenance operations have to be carried out by qualified personnel only, with power supply disconnected and stationary mechanical parts;
- device must be used only for the purpose appropriate to its design: use for purposes other than those for which it has been designed could result in serious personal and/or the environment damage;
- high current, voltage and moving mechanical parts can cause serious or fatal injury;
- warning ! Do not use in explosive or flammable areas;
- failure to comply with these precautions or with specific warnings elsewhere in this manual violates safety standards of design, manufacture, and intended use of the equipment;
- Datalogic Automation S.r.l. assumes no liability for the customer's failure to comply with these requirements.

Electrical safety

- Turn off power supply before connecting the device;
- connect according to explanation in section “4 – electrical connections”;
- in compliance with the 2014/30/EU norm on electromagnetic compatibility, following precautions must be taken:
  - before handling and installing, discharge electrical charge from your body and tools which may come in touch with the device;
  - power supply must be stabilized without noise, install EMC filters on device power supply if needed;
  - always use shielded cables (twisted pair cables whenever possible);
  - avoid cables runs longer than necessary;
  - avoid running the signal cable near high voltage power cables;
  - mount the device as far as possible from any capacitive or inductive noise source, shield the device from noise source if needed;
  - to guarantee a correct working of the device, avoid using strong magnets on or near by the unit;
  - minimize noise by connecting the shield and/or the connector housing and/or the frame to ground. Make sure that ground is not affected by noise. The connection point to ground can be situated both on the device side and on user’s side. The best solution to minimize the interference must be carried out by the user.

Mechanical safety

- Install the device following strictly the information in the section “3 – Mounting instructions”;
- mechanical installation has to be carried out with stationary mechanical parts;
- do not disassemble the encoder;
- do not tool the encoder or its shaft;
- delicate electronic equipment: handle with care; do not subject the device and the shaft to knocks or shocks;
- respect the environmental characteristics declared by manufacturer;
- unit with solid shaft: in order to guarantee maximum reliability over time of mechanical parts, we recommend a flexible coupling to be installed to connect the encoder and user's shaft; make sure the misalignment tolerances of the flexible coupling are respected;
- unit with hollow shaft: the encoder can be mounted directly on a shaft whose diameter has to respect the technical characteristics specified in the purchase order and clamped by means of the collar and, when requested, the anti-rotation pin.

2. Identification

Device can be identified through the ordering code and the serial number printed on the label applied to its body. Information is listed in the delivery document too.

Please always quote the ordering code and the serial number when reaching contatta Datalogic Automation s.r.l. for purchasing spare parts or needing assistance.

For any information on the technical characteristics of the product refer to the technical catalogue.

3. Mounting instructions

WARNING
Installation has to be carried out by qualified personnel only, with power supply disconnected and mechanical parts compulsorily in stop.

3.1 Solid shaft encoders

- Mount the flexible coupling 1 on the encoder shaft;
- fix the encoder to the flange 2 (or to the mounting bell) by means of screws 3;
- secure the flange 2 to the support (or the mounting bell to the motor);
- mount the flexible coupling 1 on the motor shaft;
- make sure the misalignment tolerances of the flexible coupling 1 are respected.

3.1.1 Customary installation

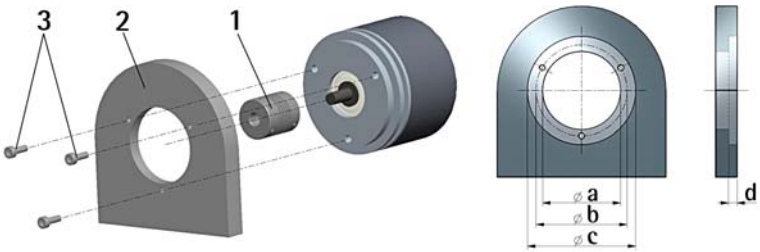

	a [mm]	b [mm]	c [mm]	d [mm]
AMT58	36 H7	48	-	-

3.1.2 Fissaggio con graffe (codice ST-58-KIT)

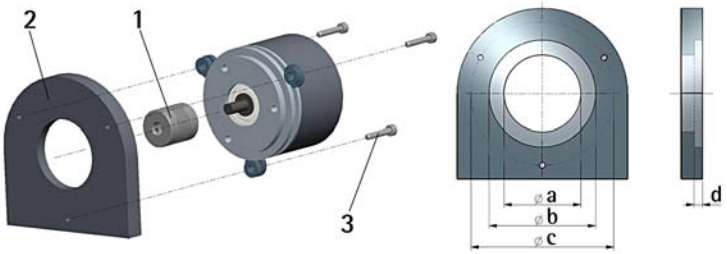

	a [mm]	b [mm]	c [mm]	d [mm]
AMT58	36 H7	-	67	-

3.1.3 Installation using a flange (code ST-58-FLNG)

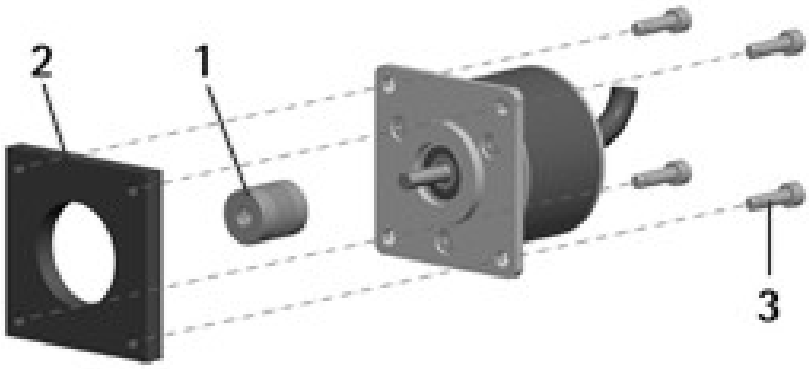

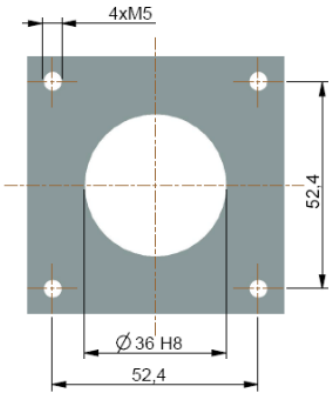

3.2 Hollow shaft encoders

3.2.1 AMT58-H15

- Mount the encoder on the motor shaft using the reducing sleeve 8 (if supplied). Avoid forcing the encoder shaft;
- fasten the fixing plate 4 to the rear of the motor using two M3 cylindrical head screws 5;
- fix the collar 3 to the encoder shaft (apply threadlocker to screw 3).

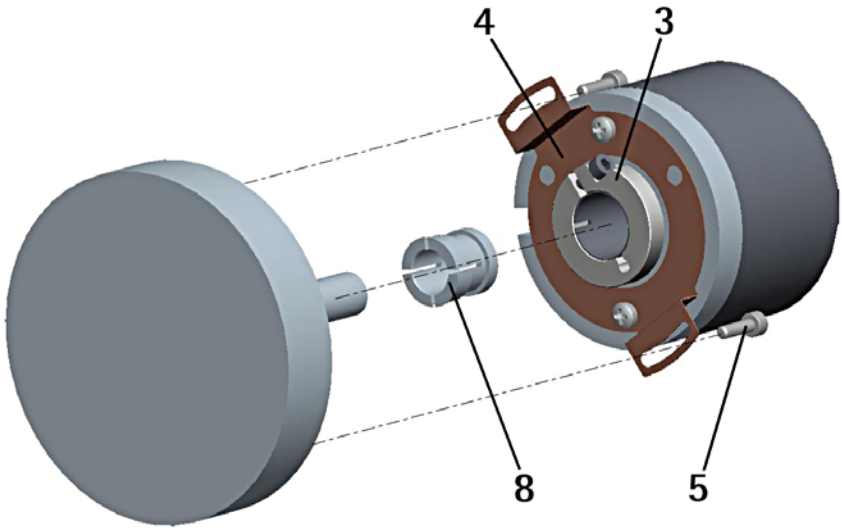

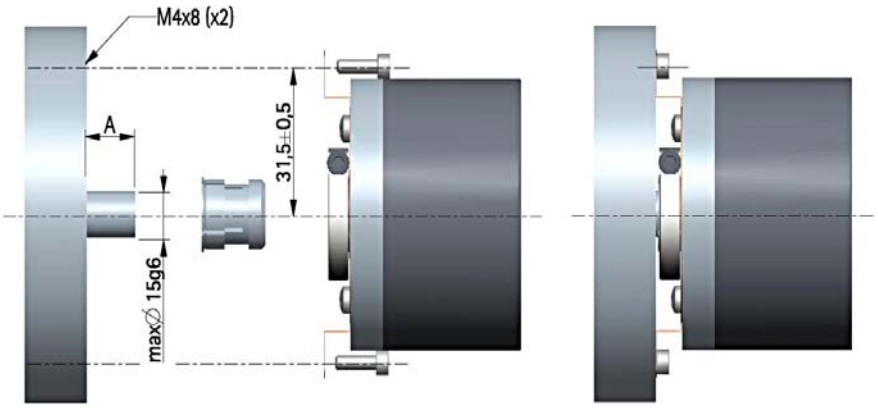

4. Electrical connections

4.1 Connection cap

WARNING
Do not remove or mount the connection cap with power supply switched ON. Damage may be caused to internal components.

The terminal connectors for connecting the power supply and the BUS IN and BUS OUT cables (BC-PB connection cap) as well as the dip-switches meant to set the node ID and activate the termination resistance are located inside the encoder connection cap. Thus you must remove the connection cap to access any of them.

NOTE
Be careful not to damage the internal components when you perform this operation.

To remove the connection cap loosen the two screws 1. Please be careful with the internal connector.
Always replace the connection cap at the end of the operation. Take care in re-connecting the internal connector. Tighten the screws 1 using a tightening torque of approx. 2.5 Nm.

WARNING
You are required to check that the encoder body and the connection cap are at the same potential before replacing the connection cap!

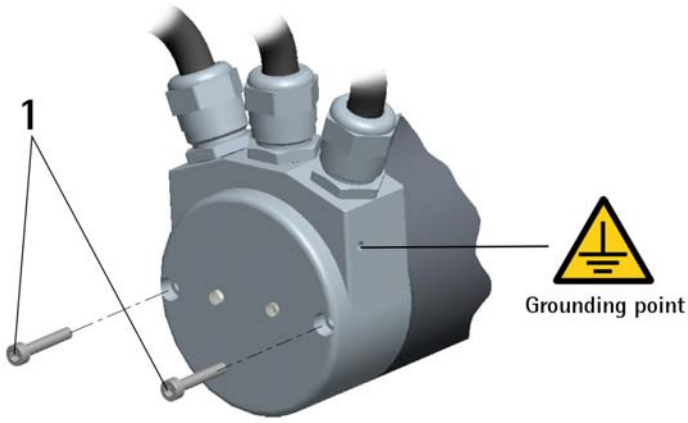

4.2 Ground connection

Minimize noise by connecting the shield and/or the connector housing and/or the frame to ground. Make sure that ground is not affected by noise. The connection point to ground can be situated both on the device side and on user's side. The best solution to minimize the interference must be carried out by the user. You are advised to provide the ground connection as close as possible to the encoder. We suggest using the ground point provided in the cap (see Figure, use 1 TCEI M3 x 6 cylindrical head screw with 2 tooth lock washers).

4.3 Connection cap with PG gland

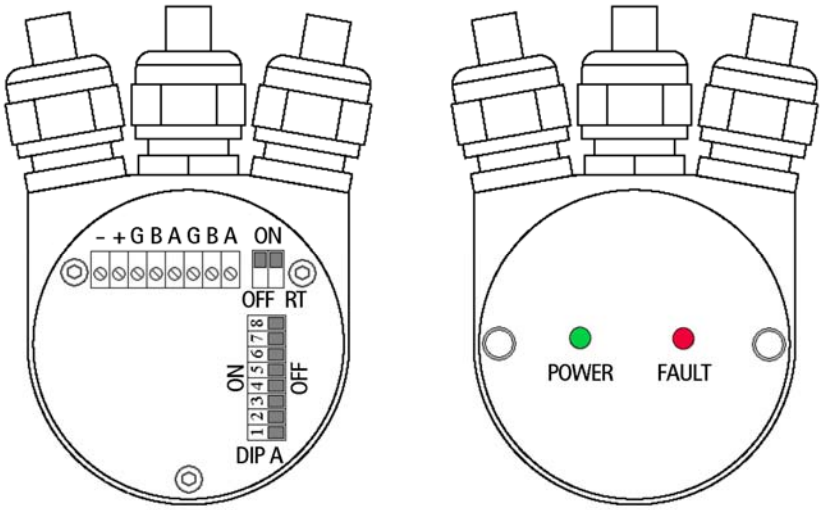

BC-PB connection cap is fitted with three PG9 cable glands for bus-IN and bus-OUT connections and power supply connection. The bus cables can be connected directly to the terminal connectors located in front of each cable gland.

We recommend Profibus-DP certificated cables to be used. Core diameter should not exceed Ø 1,5 mm (0.06 inches).

Terminal connector	Description
-	0 VDC Supply voltage
+	+10VDC +30VDC Supply voltage
G	Profibus GND [1]
B	Profibus B (Red)
A	Profibus A (Green)
PG	Shield [2]

[1] Profibus GND is the 0V reference of Profibus signals, it is not connected to 0VDC supply voltage.

[2] Connect the cable shield to cable gland.

4.4 Connection cap with M12 connectors

BC-PB-C connection cap is fitted with three M12 connectors with pin-out in compliance with Profibus standard. Therefore you can use standard Profibus cables commercially available.

Power supply
M12 connector
A coding
(frontal side)

male

Pin	Function
1	+10VDC +30VDC
3	0 VDC GND
4 [1]	Shield
Case	

[1] Shield is also connected to pin 4 to allow the connection of the shield even if the plug connector has a plastic case.

Profibus signals
M12 connector
B coding
(frontal side)

male
(BUS IN)

female
(BUS OUT)

Pin	Function
1	n.c.
2	Profibus A (Green)
3	n.c.
4	Profibus B (Red)
5	n.c.
Case	Shield

n.c. = not connected

4.5 Connection of the shield

Disentangle and shorten the shielding 1 and then bend it over the part 2; finally place the ring nut 3 of the connector. Be sure that the shielding 1 is in tight contact with the ring nut 3.

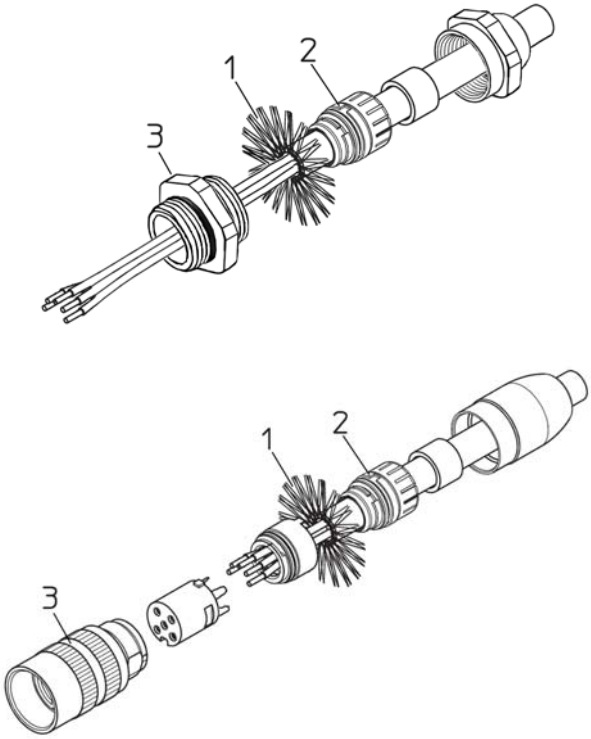

4.6 Bus termination resistance

A bus termination resistance is provided in the connection cap. This has to be activated as line termination in the last device.
Use RT Switch to activate or deactivate the bus termination.

RT	Description
1 = 2 = ON	Activated: if the encoder is the last device in the transmission line
1 = 2 = OFF	Deactivated: if the encoder is not the last device in the transmission line

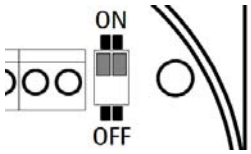

4.7 Baud rate

The baud rate is set by the Master via software during configuration of the node (slave).
Supported baud rates are listed in the enclosed GSD file.

4.8 Node number: DIP A

WARNING
Power supply must be turned off before performing this operation!

The node number must be set via hardware using DIP A dip-switches.
Allowed addresses are from 0 to 125. The default value is 1.

DIP A:

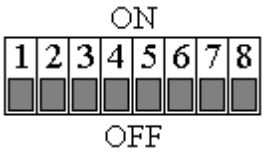

Turn the power supply off and set the node number in binary value; consider that: ON=1, OFF=0

bit	1 LSB	2	3	4	5	6	7 MSB	8 not used
	2^0	2^1	2^2	2^3	2^4	2^5	2^6	

Example

Set node number = 25:
25_{10} = 0001 1001_2 (binary value)

bit	1	2	3	4	5	6	7	8
	2^0	2^1	2^2	2^3	2^4	2^5	2^6	
	ON	OFF	OFF	ON	ON	OFF	OFF	OFF

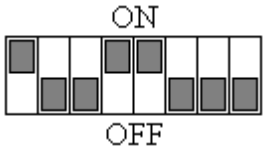

Set node number = 55:
55_{10} = 0011 0111_2 (binary value)

bit	1	2	3	4	5	6	7	8
	2^0	2^1	2^2	2^3	2^4	2^5	2^6	
	ON	ON	ON	OFF	ON	ON	OFF	OFF

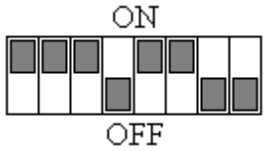

4.9 Diagnostic LEDs

Two LEDs located in the rear side of the connection cap are designed to show the operating or fault status of the Profibus-DP interface.

Fault (red)	Power (green)	Event
OFF	OFF	No power supply or hardware fault
OFF	ON	Correct operation (correct communication)
OFF	Flashing	Red Zone, see section “6.9 Red Zone”
ON	Flashing	Configuration parameters not valid
ON	OFF	Transmission time-out error
Flashing	ON	Bus communication failure
Flashing	Flashing	Flash memory error

5. Quick reference

5.1 STEP7 configuration

5.1.1 Importing GSD file

Profibus encoders are supplied with their own GSD file **AMT58-xxx-16x14-FBUS-PB** (see enclosed documentation or www.datalogic.com).

In the menu bar of the HW Config window, press Options and then Install New GSD… command.

Select the correct GSD file in the installation window and install it.

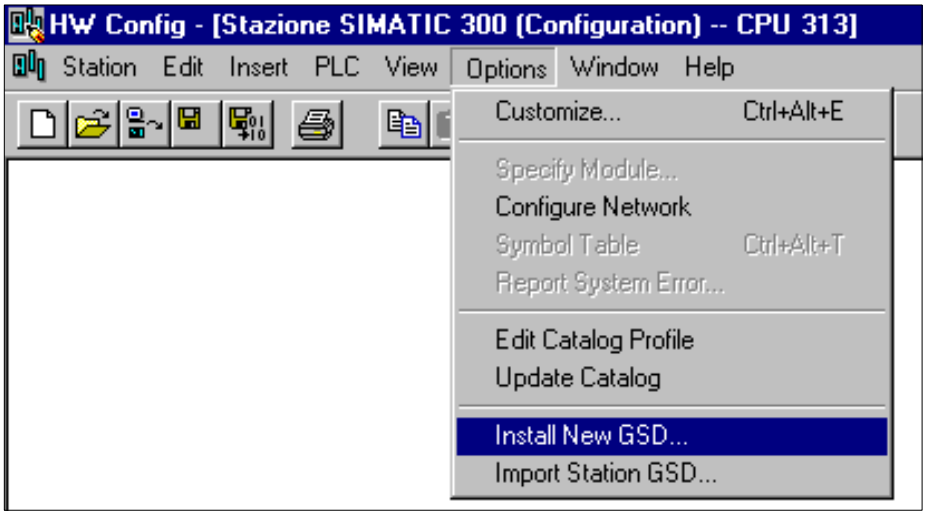

5.1.2 Adding a node to the project

In the left pane of the HW Config window, open the directory tree and select AMT58 module to the window on the right and drop it on “BUS”.
Then drag the desired submodule (Class 1, Class 2 or Class 2(+VEL) to the variables table in the bottom right; in this way you set the class of the device (for further details see section “6.2 Classes of the Device profile”

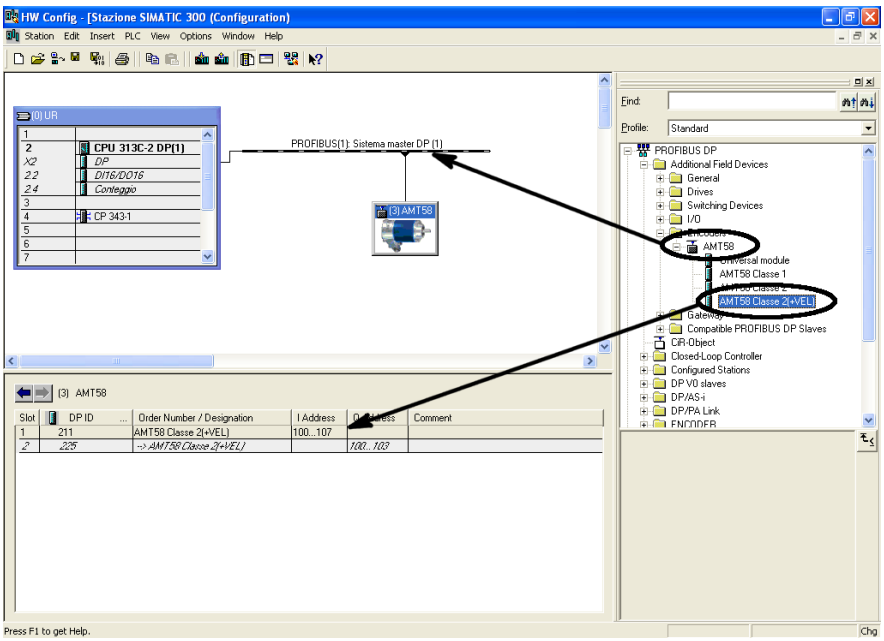

5.1.3 Encoder configuration parameters

To enter the Encoder configuration parameters window, select the device in the bottom right of the HW Config window and right-click to open the menu; then choose the Object Properties… command.

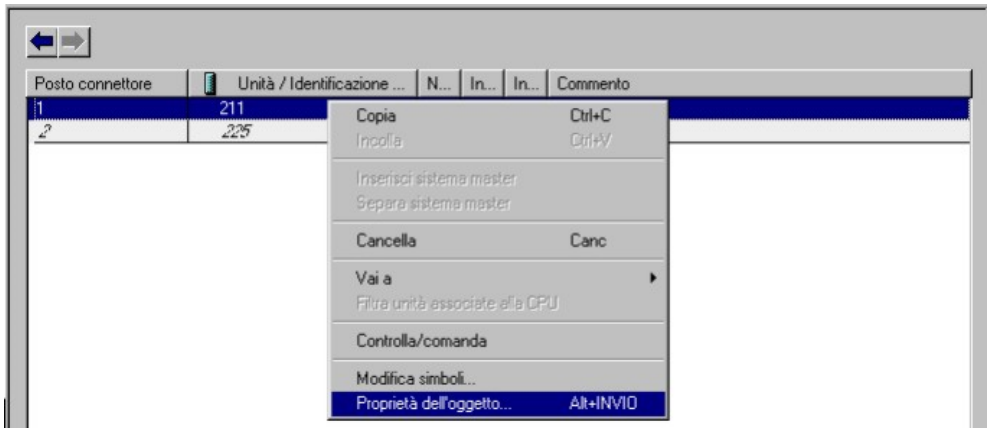

Properties – DP slave window will appear; in the Parameter Assignment page the list of all encoder parameters is available.
For any information on using and setting each parameter refer to section “6.4 DDLM_Set_Prm”.

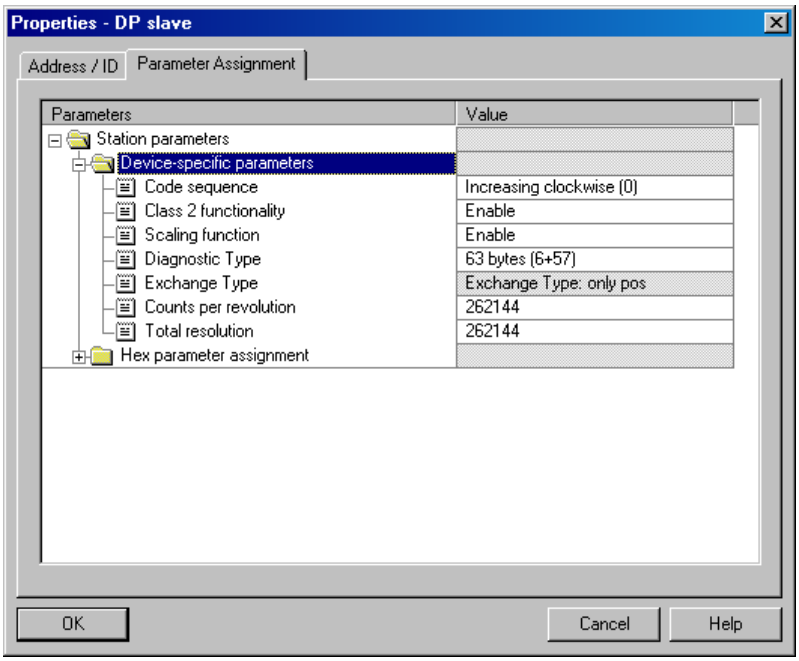

Class 2 example

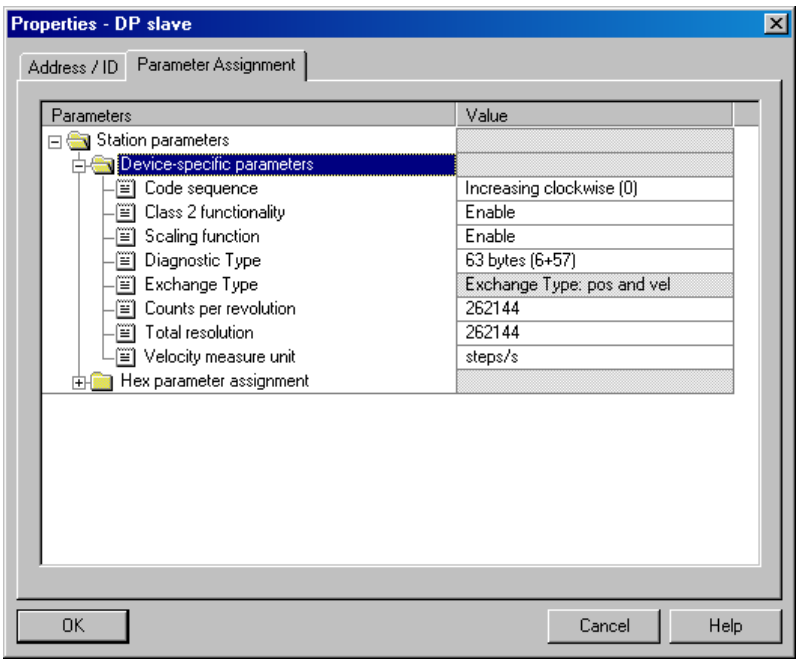

Class 2(+VEL) example

After having set new parameter values, click the OK button to close the Properties – DP slave window and then the Download button (see icon on the left) in the toolbar of the HW Config window to download set parameters.

5.2 Reading diagnostic information

The diagnostic information message can be set either to 16 or 63 bytes, see Diagnostic type in encoder parameters.

Before entering the diagnostic page, it is necessary to connect to the unit (enter online status). To do this, select Station\Open online in the HW Config window or click the Online<->Offline button (see icon on the left). Then select PLC\Module information… to enter the Module information window. Finally open the DP Slave Diagnostic page.

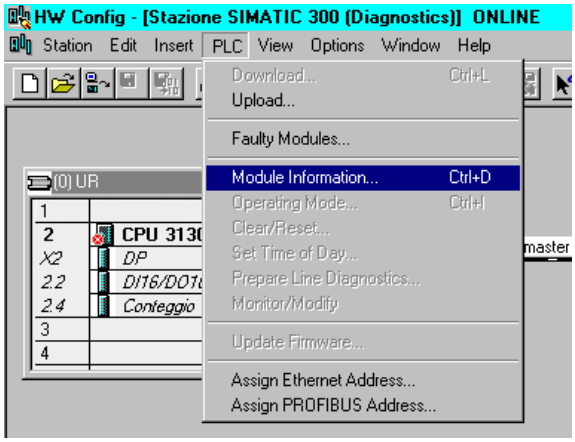

Click the Hex. Format… button to display diagnostic information:

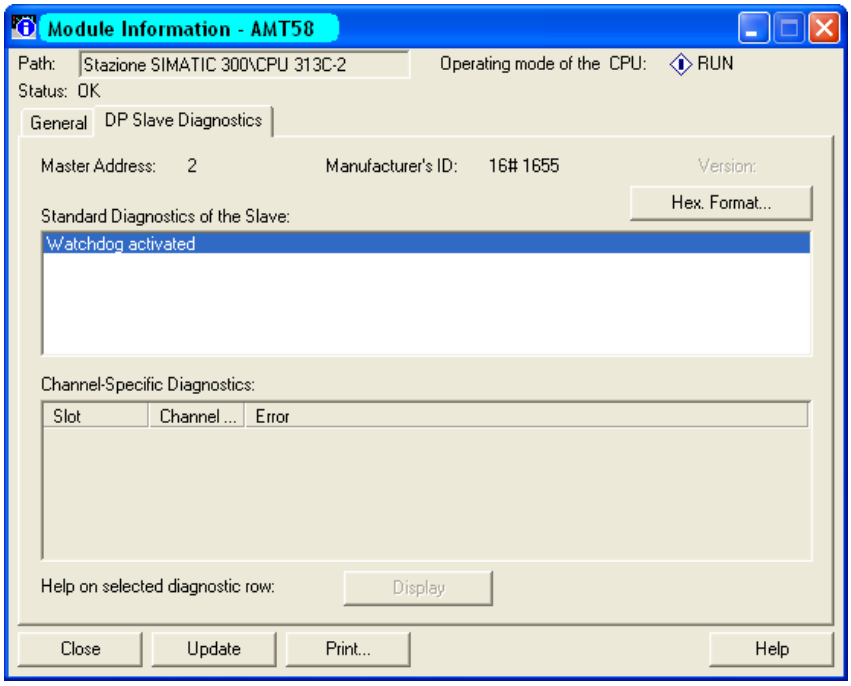

16-byte Diagnostic:

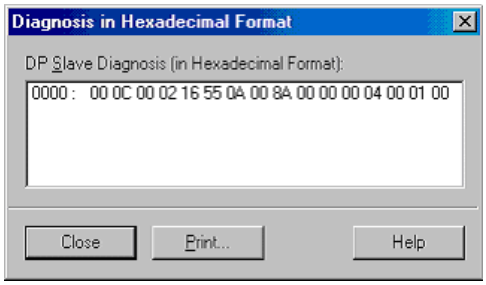

63-byte Diagnostic:

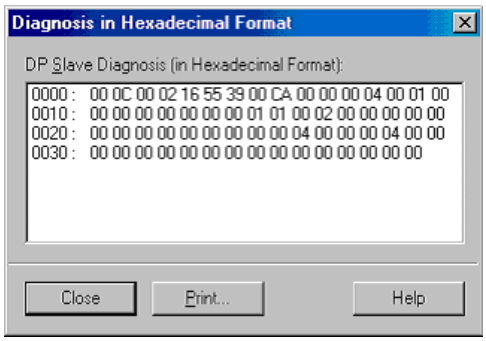

NOTE
Should the 63-byte diagnostic not work properly using STEP7 software we suggest setting the 16-byte diagnostic.
If diagnostic information is not used, it is recommended to set 16-byte diagnostic (see “5.1.3 Encoders configuration parameters” section).
See section “6.7 DDLM_Slave_Diag” for a complete list and meaning of each diagnostic byte.

5.3 Setting the Preset**Errore. L'origine riferimento non è stata trovata.**

Example
The encoder having device address 1 transmits the position value to the Master.
Position value is loaded into variables ED 100…103 (4 bytes).
Speed value is loaded into variables ED 104…107 (4 bytes).
The Preset value is sent to the encoder using variables AD 100…103 (4 bytes).

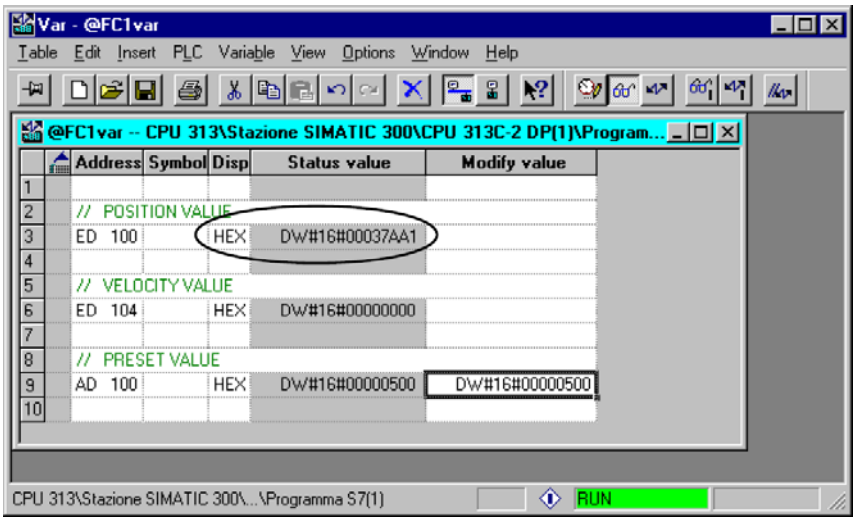

The current position of the encoder is 0003 7AA1hex.
To set the Preset value = 0000 0500hex, set bit 31 of variable AD 100 = “1” (8000 0500hex).

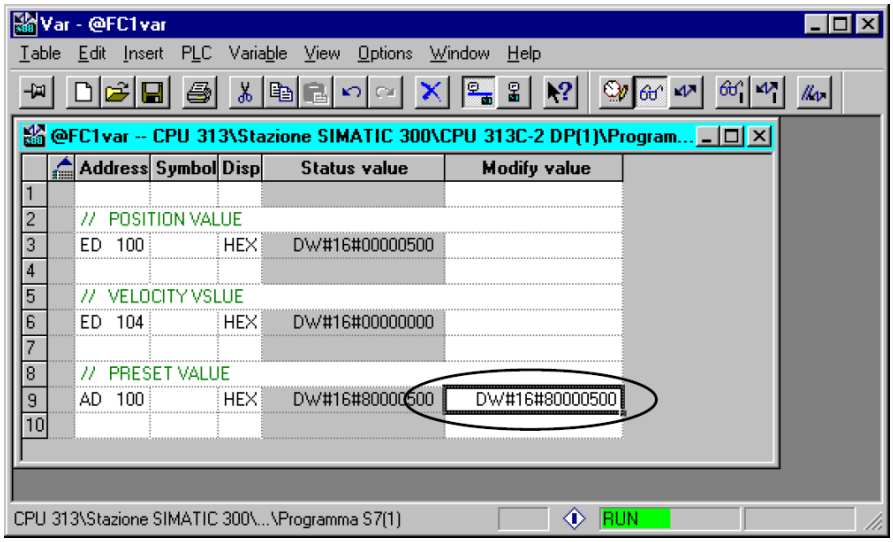

Finally click Command variables button in the Toolbar (see right icon).

Now the position of the encoder is 0000 0500hex.

To close “Preset” procedure set bit 31 of variable 100 back to ”0” and then click the "Command variables" button again.

NOTE

It may occur that data variables having index higher than 127 or data greater than 4 bytes are not treated properly in STEP7 software. Should this happen, we recommend "MD" reference operators (pointers) for encoder position, speed and Preset to be used.

5.4 Set node number via BUS

To access this function, PLC must be able to run the SAP55 service.

To set the node number via BUS, set dip-switches to address 126 ($0111\ 1110_2$):

DIP A:

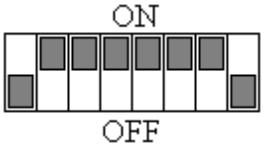

To set node number, select PLC\PROFIBUS\Assign PROFIBUS Address… in the SIMATIC Manager window and open the Assign PROFIBUS Address window.

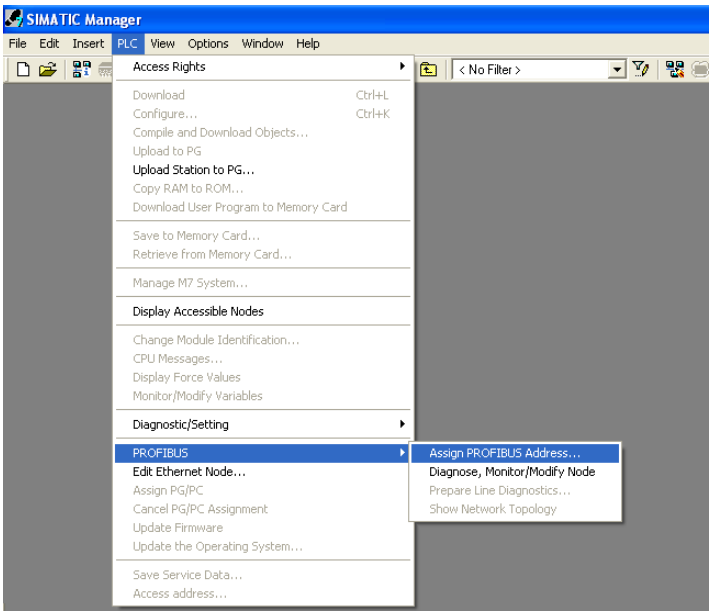

Choose the current address 126 in the first Current PROFIBUS Address combo box and then set the new address in the second New PROFIBUS Address combo box. Press the Apply and OK buttons to confirm.

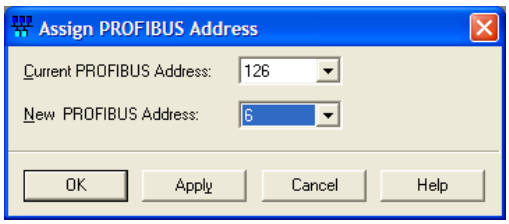

6. Profibus® interface

Datalogic units are slave devices and comply with “Profibus-DP Profile for Encoders”; they can be set as Class 1, Class 2 or Class 2(+VEL) devices (see section “6.2 Classes of the Device profile **Errore. L'origine riferimento non è stata trovata.**“).
For any omitted information refer to the official Profibus website www.profibus.com.

6.1 GSD file

Profibus encoders are supplied with their own GSD file AMT58-xxx-16x14-FBUS-PB.GSD (see enclosed documentation or click www.datalogic.com). GSD file has to be installed on your Profibus master device.

6.2 Classes of the Device profile

Encoder class must be set when configuring the device.
Class 1 allows basic functions of the device and should be used for:

- sending the position value (see parameter **Position value**);
- changing the counting direction (see parameter **Code sequence**);
- setting the preset value (see parameter **Preset value**).

Class 2 allows to use Class 1 functions and extended functions such as:

- scaling function (see **Scaling function control**);
- diagnostic type (see parameter **Errore. L'origine riferimento non è stata trovata.**).

Class 2(+VEL) allows to use Class 2 functions and extended functions such as:
transmission of velocity value (see parameter **Errore. L'origine riferimento non è stata trovata.Position and velocity values**);

- velocity measure unit (see parameter **Velocity measure unit**).

6.3 Modes of operation

Profibus-DP devices allow operation using different communication modes (see Figure below):

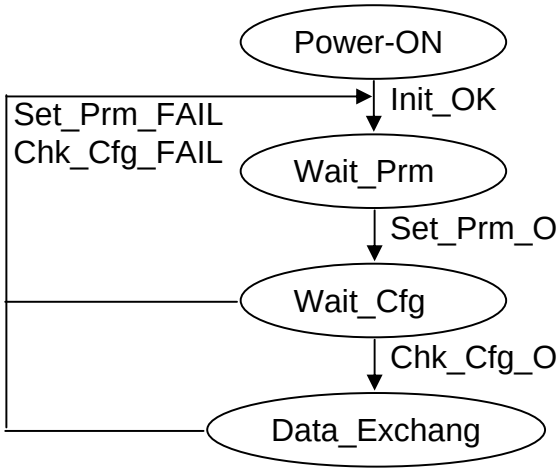

NOTE
All parameters -except for **Preset value**- are transmitted in Set_Prm mode.
Preset value is transmitted only in Data_Exchange mode.

Types of communication

Transmission of data between Master and Slave is carried out using the following types of messages:

- DDLM_Set_Prm:
  Used for configuring the slave. This communication mode is active immediately after power is turned ON and used to send parameters from Master to Slave (see section “6.4 DDLM_Set_Prm“).

- DDLM_Chk_Cfg:
  Sets the number of bytes used for data transmission in Data_Exchange mode (see section “6.5 DDLM_Chk_Cfg“).

- DDLM_Data_Exchange:
  Used as "standard operation mode".
  Used by Master to send the **Preset value**; used by Slave to transmit position and velocity values (see section “6.6 DDLM_Data_Exchange“).
- DDLM_Slave_Diag:
  Used when power is turned on and whenever Master needs to know diagnostic information from Slave device (see section “6.7 DDLM_Slave_Diag“).
- Set_Slave_Address:
  Used to set a new node number via BUS (service SAP55, see section “6.8 Set_Slave_Address (service SAP55)“).

6.4 DDLM_Set_Prm

When system is turned on, configuration data set by the operator is sent to the absolute encoder by the controller. Parameters transmission depends on the configuration chosen by the operator. Customarily data is sent automatically while data setting is carried out through a user's interface available in the controller's software (for instance, STEP7, see section “5.1 STEP7 configuration”)
However sometimes it is necessary to set some bits and bytes according to the working specifications you want to set.
Data transmission is carried out in compliance with values set for the encoder profile and shown in the following tables.

DDLM_Set_Prm with Class 1:

Byte	Parameter	
0…9	Reserved for PROFIBUS network	
10	Operating parameters	
	bit 0	**Code sequence**
	bit 1	**Class 2 functionality**
	bits2…5	Reserved
	bit 6	**Diagnostic type**
	bit 7	**Exchange type**
11…20	Reserved	

DDLM_Set_Prm with Class 2:

Byte	Parameter	
0…9	Reserved for PROFIBUS network	
10	Operating parameters	
	bit 0	**Code sequence**
	bit 1	**Class 2 functionality**
	bit 2	Reserved
	bit 3	**Scaling function control**
	bits 4, 5	Reserved
	bit 6	**Diagnostic type**
	bit 7	**Exchange type**
11…14	**Counts per revolution**	
15…18	**Total resolution**	
19…20	Reserved	

DDLM_Set_Prm with Class 2 (+VEL):

Byte	Parameter	
0…9	Reserved for PROFIBUS	
10	Operating parameters	
	bit 0	**Code sequence**
	bit 1	**Class 2 functionality**
	bit 2	Reserved
	bit 3	**Scaling function control**
	bits 4, 5	Reserved
	bit 6	**Diagnostic type**
	bit 7	**Exchange type**
11…14	**Counts per revolution**	
15…18	**Total resolution**	
19	**Velocity measure unit**	
20	Reserved	

6.4.1 Byte 10 - Operating parameters

Bit	Function	bit = 0	bit = 1
0	**Code sequence**	CW	CCW
1	**Class 2 functionality**	disabled	enabled
2	Reserved		
3	**Scaling function control**	disabled	enabled
4, 5	Reserved		
6	**Diagnostic type**	reduced	large
7	**Exchange type**	pos	pos + vel

Code sequence

It defines whether the position value output by the transducer increases when the encoder shaft rotates clockwise (CW) or counterclockwise (CCW). When **Code sequence** = 0, the position value increases when the encoder shaft rotates clockwise; on the contrary, when **Code sequence** = 1, the position value increases when the encoder shaft rotates counterclockwise. CW and CCW rotations are viewed from shaft end.
Default = 0 (min. = 0, max. = 1)

Class 2 functionality

Two device classes are defined in the encoder profile, one mandatory class (Class 1) and one class with optional functions (Class 2). This encoder implements functions of both Class 1 and Class 2. For any information on the available encoder classes see the section “6.2 Classes of the Device profile on page 20.
0 = Disabled = Encoder Class 1 is set.
1 = Enabled = Encoder Class 2 (or Class2(+VEL) is set.
Default = 1 (min. = 0, max. = 1)

Scaling function control

When this option is disabled (0), device uses the hardware resolution, i.e. the hardware counts per revolution and the hardware number of revolutions, see the encoder data on the label applied to the device; when it is enabled (1), device uses the resolution transmitted through bytes from 11 to 18 (**Counts per revolution** and **Total resolution**).
For a correct use of this function see sections “6.4.2 Bytes 11…14“ and “6.4.3 Bytes 15…18“.
Default = 1 (min. = 0, max. = 1)

WARNING
You can set new values next to the **Counts per revolution** and **Total resolution** items only if **Class 2 functionality** = ENABLED; if **Scaling function control** = ENABLED the set resolution values are enabled and used by the encoder; on the contrary, if **Scaling function control** = DISABLED you are allowed to set new resolution values, however they are not enabled even if sent to the encoder: the encoder still goes on using the default values uploaded from the GSD file, NOT the new entered values, until you enable the **Scaling function control**.

Diagnostic type

0 = Reduced = 16-byte diagnostic information
1 = Extended = 63-byte diagnostic information
Encoder Class 1 provides only reduced diagnostic.
The meaning of each diagnostic byte is detailed in the section “6.7 DDLM_Slave_Diag”.
Default = 0 (min. = 0, max. = 0) for Class 1
Default = 0 (min. = 0, max. = 1) for Class 2 and Class 2 (+VEL)

Exchange type

0 = Pos = device transmits only position value (Class 1 and Class 2).
1 = Pos + vel = device transmits both position and velocity values (Class 2(+VEL)).
Default = 0 (min. = 0, max. = 0) for Class 1 and Class 2
Default = 1 (min. = 1, max. = 1) for Class 2 (+VEL)

6.4.2 Bytes 11…14Counts per revolution

WARNING
You can set a new value next to the **Counts per revolution** item only if **Class 2 functionality** = ENABLED; if **Scaling function control** = ENABLED the set resolution values are enabled and used by the encoder; on the contrary, if **Scaling function control** = DISABLED you are allowed to set new resolution values, however they are not enabled even if sent to the encoder: the encoder still goes on using the default values uploaded from the GSD file, NOT the new entered values, until you enable the **Scaling function control.**
See the section “6.4.1 Byte 10 – Operating parameters” on page 23.

Counts per revolution parameter allows to program a user specific singleturn resolution (i.e. the desired number of information per revolution).

Byte	11	12	13	14
Bit	31-24	23-16	15-8	7-0
Data	2^{31} to 2^{24}	2^{23} to 2^{16}	2^{15} to 2^{8}	2^{7} to 2^{0}

Allowed values are equal to or lower than Hardware counts per revolution value. We suggest setting power of 2 values (1, 2, 4, … 2048, 4096, …).
Setting a value greater than allowed causes the resolution to be forced to Hardware counts per revolution value.
Default = 262144 (min. = 1, max. = 262144) for HS58
Default = 65536 (min. = 1, max. = 65536) for HM58

WARNING
When you set a new value next to **Counts per revolution** item, please always check also **Total resolution** item value and be sure that the resulting number of revolution complies with the Hardware number of revolutions of the device.
Let's say our encoder is programmed as follows:
Counts per revolution: 8192
Total resolution = 33554432_{10} = 8192 (cpr) * 4096 (rev.)
Let's set a new singleturn resolution, for instance: **Counts per revolution** = 360.
If we do not change the **Errore. L'origine riferimento non è stata trovata.** value at the same time, we will get the following result:

$$\text{Number of revolutions} = \frac{33554432\ (\textbf{Total resolution})}{360\ (\textbf{Counts per revolution})} = 93206.755...$$

As you can see, the encoder is required to carry out more than 93000 revolutions, this cannot be as the hardware number of revolutions is, as stated, 16384. When this happens, the encoder falls into an error signalling the faulty condition through the diagnostic LEDs (see on page 12).

6.4.3 Bytes 15…18
Total resolution

WARNING
You can set a new value next to the **Total resolution** item only if **Class 2 functionality** = ENABLED; if **Scaling function control** = ENABLED the set resolution values are enabled and used by the encoder; on the contrary, if **Scaling function control** = DISABLED you are allowed to set new resolution values, however they are not enabled even if sent to the encoder: the encoder still goes on using the default values uploaded from the GSD file, NOT the new entered values, until you enable the **Scaling function control** See the section “6.4.1 Byte 10 – Operating parameters” on page 23.

This parameter is intended to set the number of distinguishable steps over the total measuring range. The total resolution of the encoder results from the product of **Counts per revolution** by Number of revolutions.

Byte	15	16	17	18
Bit	31-24	23-16	15-8	7-0
Data	2^{31} to 2^{24}	2^{23} to 2^{16}	2^{15} to 2^{8}	2^{7} to 2^{0}

Allowed values are equal to or lower than the Total hardware resolution value.
Setting a value greater than allowed causes the resolution to be forced to the Total hardware resolution value.

$$\text{Number of revolutions} = \frac{\textbf{Total resolution}}{\textbf{Counts per revolution}}$$

We recommend the Number of revolutions to be set to a power of 2. This is meant to avoid problems when using the device in endless operation (when crossing the physical zero) and entering the "Red Zone" (see the section “6.9 Red Zone”).

Default = 262144 (min. = 1, max. = 262144) for HS58
Default = 1073741824 (min. = 1, max. = 1073741824) for HM58

WARNING
When you set a new value next to the **Total resolution** item, please always check also the **Counts per revolution** item value and be sure that the resulting number of revolutions complies with the **Hardware number of revolutions** of the device.
Let's say our encoder is programmed as follows:
Counts per revolution: 8192
Total resolution = 33554432_{10} = 8192 (cpr) * 4096 (rev.)
Let's set a new total resolution, for instance: **Total resolution** = 360.
As the **Total resolution** must be greater than or equal to the **Counts per revolution**, the above setting is not allowed. When this happens, the encoder falls into an error signalling the faulty condition through the diagnostic LEDs (see on page 12).

Example

"HS5818/FB-xx": singleturn encoder
- Hardware counts per revolution = 18 bit/turn (2^{18} = 262144 cpr)
- Hardware number of turns = 1
- Total hardware resolution = 18 bit (262144 ∗ 1 = 262144)

"HM5816/16384/FB-xx": multiturn encoder
- Hardware counts per revolution = 16 bit/turn (2^{16} = 65536 cpr)
- Hardware number of turns = 14 bit (16384 turn)
- Total hardware resolution = 30 bit (65536 ∗ 16384 = 2^{30} = 1073741824)

Example

Multiturn encoder "HM5816/16384/FB-6" with "BC-PB-C" connection cap.

Resolution is:
- Hardware counts per revolution = 65536 (2^{16})
- Hardware number of turns = 16384 (2^{14})
- Total hardware resolution = 1073741824 (2^{30})

2048 steps per revolution ∗ 1024 turns are required:
- Enable **Scaling function control**: byte 10=0A hex (bit 1=bit 3="1")
- **Counts per revolution** = 2048: byte 11…14 = 0000 0800 hex
- **Total resolution** = 2048 ∗ 1024 = 2097152: byte 15…18 = 0020 0000 hex.

NOTE
When new values are set next to the items **Counts per revolution** and/or **Total resolution**, a new **Preset value** and zero-setting values are required according to the new resolution.

6.4.4 Byte 19Velocity measure unit

This byte is available only when Class 2(+VEL) is set (see also **Class 2 functionality** and **Exchange type** items). It defines the unit of measurement for speed value transmitted by the device.
00 = rpm (revolutions per minute);
01 = step/s (steps per second).
Default = 0 (min. = 0, max. = 1)

6.5 DDLM_Chk_Cfg

Configuration function allows the Master to send configuration data to the Slave for any check operation. The main purpose of this function is to set the number of bytes used for the Data_Exchange as viewed from Master side.

Chk_Cfg message structure (1 byte):

bit 7 = Consistency (="1")
bit 6 = Word format ("0"=byte,"1"=word=4byte)
bit 5…4 = In/out data ("01"=Input, "10"=output)
bit 3…0 = Length code

Example

bit	7	6	5	4	3	2	1	0	
Data	1	1	0	1	0	0	0	1	D1h
	1	1	0	1	0	0	1	1	D3h
	1	1	1	0	0	0	0	1	E1h

Class 1 and Class 2:
D1hex = 4 byte input
E1hex = 4 byte output

Class 2(+VEL):
D3hex = 8 byte input
E1hex = 4 byte output

6.6 DDLM_Data_Exchange

This is the normal operation status of the system. The Slave (for both Class 1 and Class 2) can transmit the position value (and speed value if Class 2+VEL is set) and receive the **Preset value** from the Master.

Position value

when Class 1 and Class 2 are set (Encoder → Master)

Byte	1	2	3	4
Bit	31-24	23-16	15-8	7-0
Data	2^{31} to 2^{24}	2^{23} to 2^{16}	2^{15} to 2^{8}	2^{7} to 2^{0}

Position and velocity values

when Class 2 (+VEL) is set (Encoder → Master)

Byte	1	…	4	5	…	8
Bit	31-24	…	7-0	31-24	…	7-0
	Position			Velocity		

Preset value

when any Class is set (Master → Slave)

Byte	1	2	3	4
Bit	31-24	23-16	15-8	7-0
Data	2^{31} to 2^{24}	2^{23} to 2^{16}	2^{15} to 2^{8}	2^{7} to 2^{0}

The Preset function is meant to assign a desired value to a physical position of the encoder. The chosen physical position will get the value set next to this item and all the previous and following positions will get a value according to it. This function is useful, for example, when the zero position of the encoder and the zero position of the axis need to match. The preset value will be set for the position of the encoder in the moment when the preset value is sent. The **Preset value** value is sent by the Master to the Slave in **Data_Exchange** mode by setting bit 31 = “1” for 3 cycles.
The MSB of the preset value controls the preset function in the following way:
Normal operating mode: MSB = 0 (bit 31): the encoder will make no change in preset value.
Preset mode: MSB = 1 (bit 31): with the MSB = 1 the encoder accepts the transferred value (bits 0 ... 30) as a preset value in binary code.

- If **Scaling function control** = DISABLED, then **Preset value** must be less than the **Total hardware resolution**.
- If **Scaling function control** = ENABLED, then **Preset value** must be less than the **Total resolution**.

Example

Preset value to be set = 0000 1000hex
Current **Position value** = 0005 5000hex

	Byte	1	2	3	4
Cycle	Bit	31-24	23-16	15-8	7-0
1°	M→S	80	00	10	00
	S→M	00	05	50	00
2°	M→S	80	00	10	00
	S→M	00	05	50	00
3°	M→S	80	00	10	00
	S→M	00	00	10	00

NOTE
We suggest setting the **Preset value** when the shaft is in stop.
The new **Preset value** is saved immediately after receipt.

6.7 DDLM_Slave_Diag

The Master device can send a request for diagnostic information at any time to the Slave device.
Datalogic devices provide two types of diagnostics:
- reduced (16 bytes)
- extended (63 bytes).

Set the diagnostic type during DDLM_Set_Prm, operating parameters (byte 10), see section “6.4.1 Byte 10 - Operating parameters”.

16-byte Diagnostic:

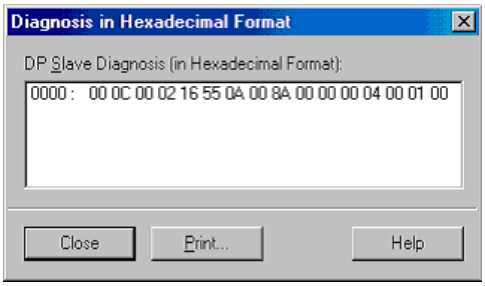

Byte	Description
0	Status 1
1	Status 2
2	Status 3
3	Master ID
4	Manufacturer ID
5	
6	Extended diagnostic header
7	Alarms

Byte	Description
8	Operating status
9	Encoder type
10	Hardware single-turn resolution
11	
12	
13	
14	Hardware number of revolution
15	

63-byte Diagnostic:

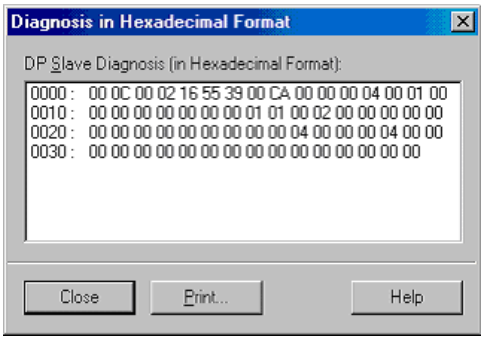

Byte	Description
0	Status 1
1	Status 2
2	Status 3
3	Master ID
4	Manufacturer ID
5	
6	Extended diagnostic header
7	Alarms
8	Operating status
9	Encoder type
10	Hardware single-turn resolution
11	
12	
13	
14	Hardware number of revolution
15	
16	Additional alarms
17	Supported alarms
18	
19	Warnings
20	
21	Supported warnings
22	
23	Profile version
24	
25	Software version
26	
27	Operating time
28	
29	
30	

Byte	Description
31	Offset
32	
33	
34	
35	Manufacturer offset value
36	
37	
38	
39	Programmed single-turn resolution
40	
41	
42	
43	Programmed total resolution
44	
45	
46	
47	Serial number
48	
49	
50	
51	
52	
53	
54	
55	
56	
57	Reserved
58	Reserved
59	Reserved
60	Reserved
61	Reserved
62	Reserved

6.8 Set_Slave_Address (service SAP55)

To access this function, the PLC must be able to run the SAP55 service.

Set dip-switch to address 126 ($0111\ 1110_2$):
DIP A:

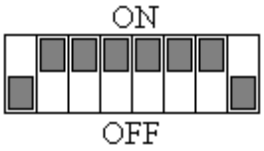

The message has the following DATA bytes:

Byte	Description
0	New node number
1	Manufacturer ID
2	
3	Lock node number (= 0: not supported)

6.9 "Red Zone"

The so-called "Red Zone" occurs when:

$$\text{Number of revolutions} = \frac{\textbf{Total resolution}}{\textbf{Counts per revolution}}$$

is not a power of 2.

When this problem arises, the device must operate within the “red zone” for a certain number of positions. The size of the “red zone” is variable. To calculate it we must subtract the **Total resolution** value from the **Hardware total resolution** of the device as many times as until the difference is less than the the set **Total resolution** value. When the encoder crosses the limit of the last **Total resolution** section thus entering the “red zone”, a counting error occurs, i.e. a jump in the position count. The problem can be represented graphically in the Figure below.

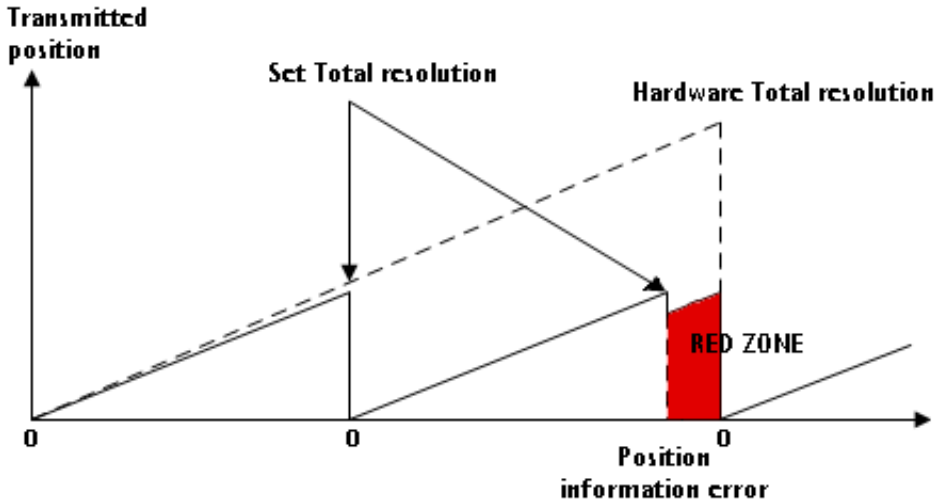

Example
"HM5816/16384/FB-xx": multiturn encoder

- Hardware counts per revolution = 65536 (2^{16})
- Hardware number of turns = 16384 (2^{14})
- Total hardware resolution = 1073741824 (2^{30})

Set parameters values:

- **Counts per revolution** = 50000
- Number of revolutions = 8000
- **Total resolution** = 400000000

$$\frac{\text{Hardware number of turns}}{\text{Number of revolutions}} = \frac{16384}{8000} = 2.048$$

It follows that, for 384 revolutions (16384 - 2 * 8000 = 384), the encoder will work within the "Red Zone" limits.

NOTE

- The "Red Zone" status is indicated by the green LED flashing while the red LED is OFF (see the section "4.9 Diagnostic LEDs" on page 12).
- Within the limits of the "Red Zone", the transmitted position is coherent with setting resolution: it is calculated so that the last position transmitted before zero position is **Total resolution** -1.
- Make attention using the values sent by the encoder while working in "Red Zone". When the encoder changes from normal status to "Red Zone" status (and vice versa) a jump of position occurs.

- Default parameters list

Parameters list	Default values
Code sequence	0
Class 2 functionality	1
Scaling function control	1
Diagnostic type	0
Exchange type	Class 1 and Class 2 = 0 Class 2 (+VEL) = 1
Counts per revolution	16384
Total resolution	1073741824
Velocity measure unit	0