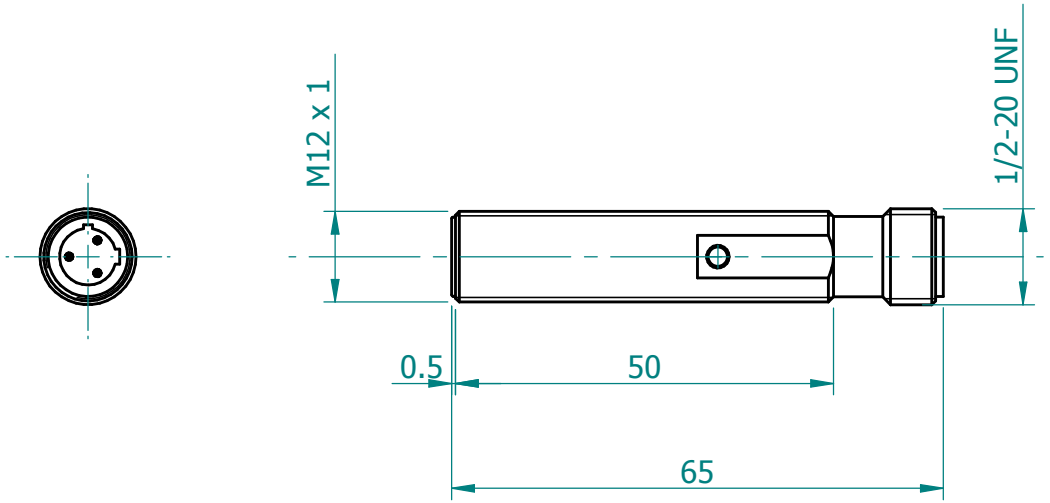
M12 x 1
1/2-20 UNF
0.5
50
65