DATALOGIC AND THE DATALOGIC LOGO ARE REGISTERED TRADEMARKS OF DATALOGIC S.P.A. IN MANY COUNTRIES, INCLUDING THE U.S.A. AND THE E.U.
DATALOGIC PROPRIETARY & CONFIDENTIAL INFORMATION

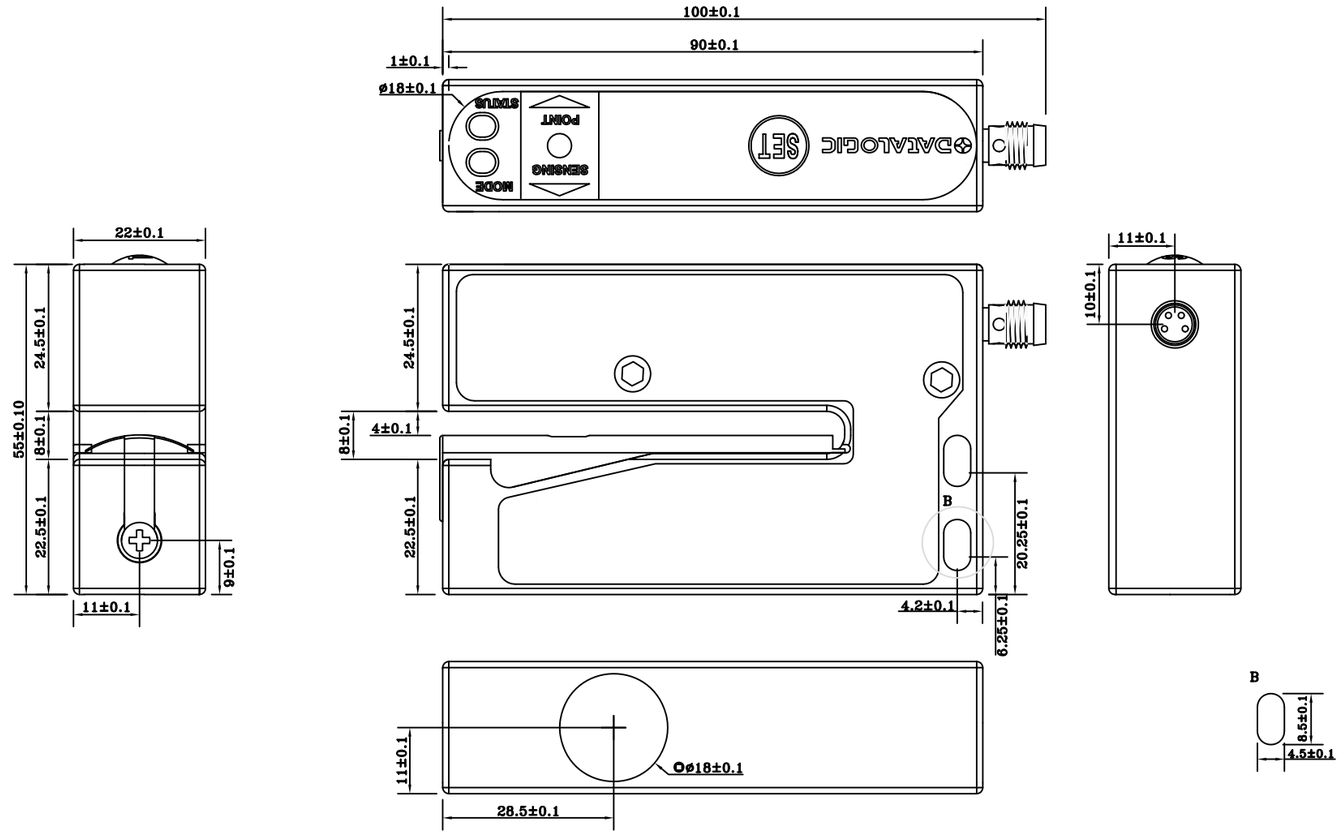

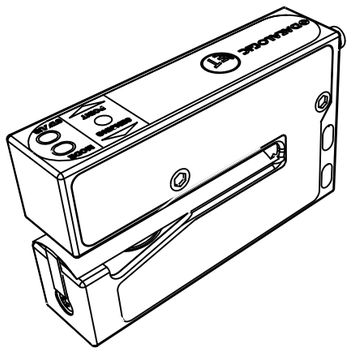

NOTE
DIMENSIONI IN mm
MATERIALE: ALLUMINIO
● CARATTERISTICHE MAGGIORI
B = Asola per viti di fissaggio

MOD.	REV.	APPLICATION	DESCRIPTION	DATE	SIGNATURE

All materials employed have to be selected among RoHS compliant materials: the EC directives to be referred to are 2002/95/EC and correlated subsequent ones.

DIMENSION WITHOUT TOLERANCE RANGE:

NOTE

PRECISION RANGE	DIMENSIONAL GROUPS > 0 to 6	> 6 to 30	> 30 to 120	> 120 to 315	> 315 to 999
MEDIUM	±0.1	±0.2	±0.3	±0.5	±0.8
PRECISE	±0.05	±0.1	±0.15	±0.2	±0.3

TREAT.

MATER.

DES.BY M.Moretti DATE 21/05/2015

SCALE

APPROV.

MOLD N°

PART N°

REV.

PART NAME DIM-0791

DATALOGIC
www.datalogic.com

PART DESCRIPTION

SRX3 M8 version