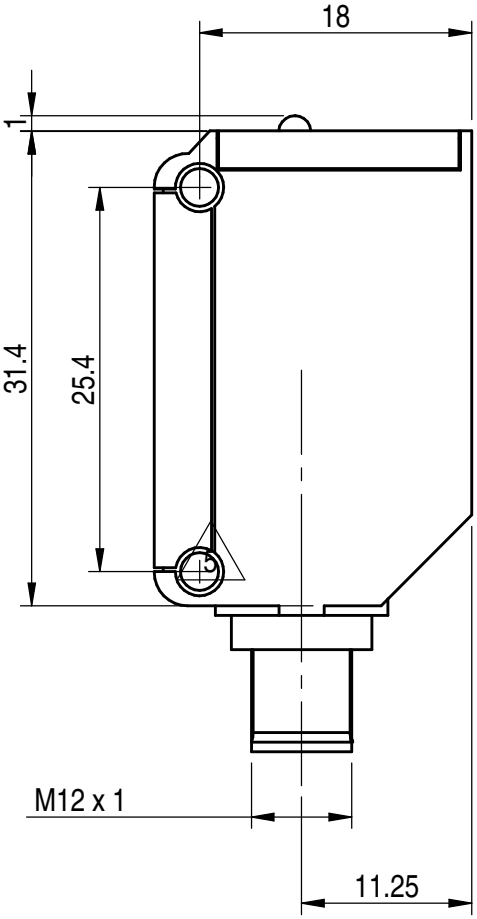
18
1
31.4
25.4
M12 x 1
11.25

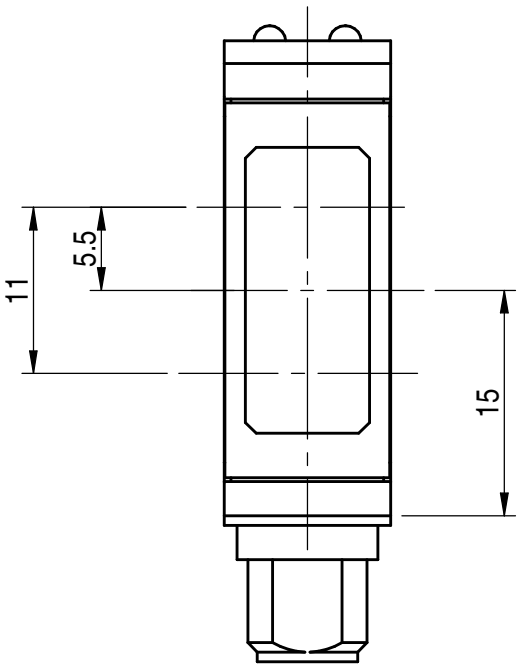
5.5
11
15

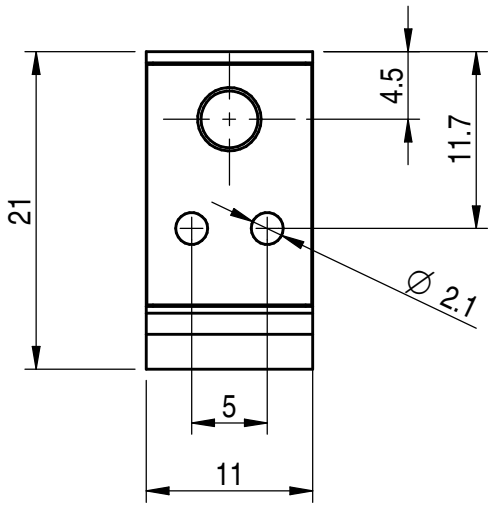
4.5
11.7
21
∅ 2.1
5
11