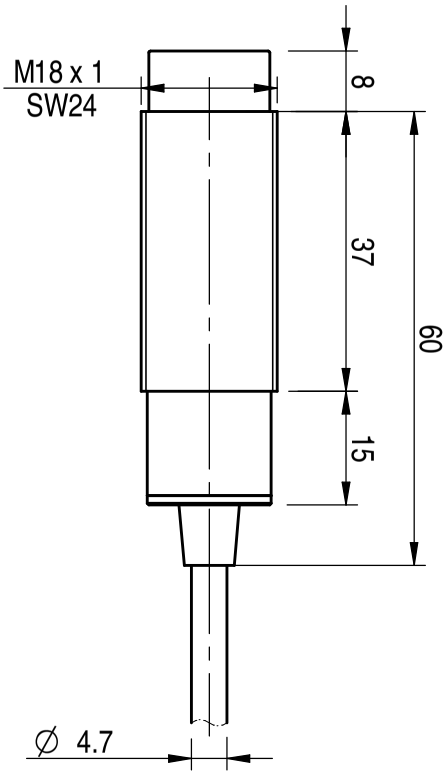
M18 x 1
SW24
8
37
60
15
∅ 4.7