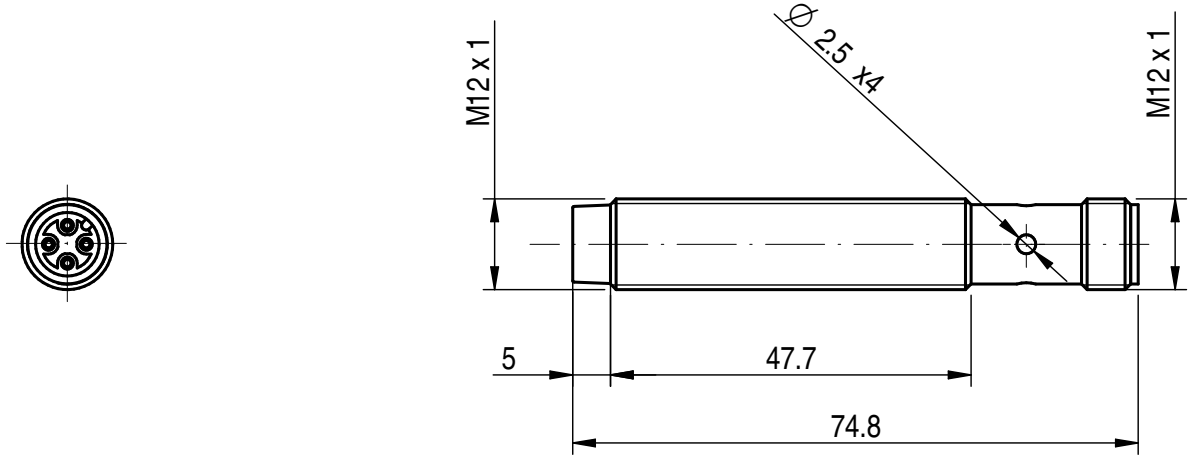
M12 x 1
Ø 2.5 x4
M12 x 1
5
47.7
74.8