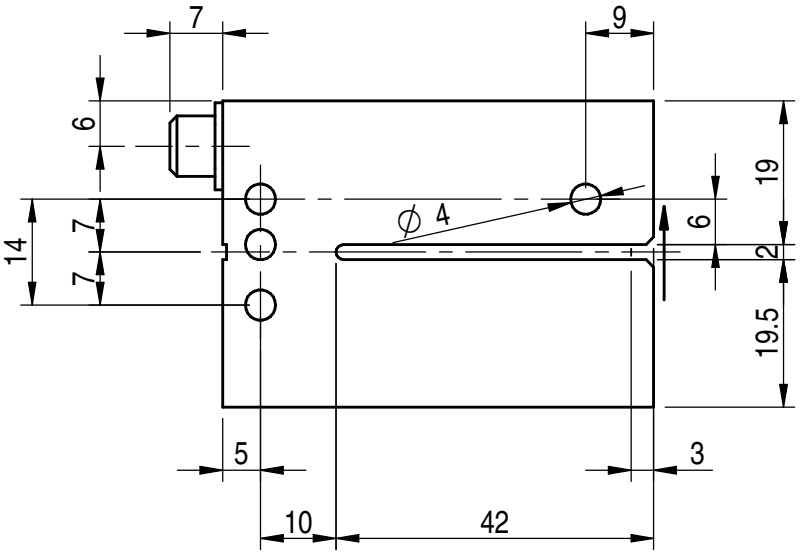
7
9
6
19
14
7
7
∅ 4
6
2
19.5
5
3
10
42

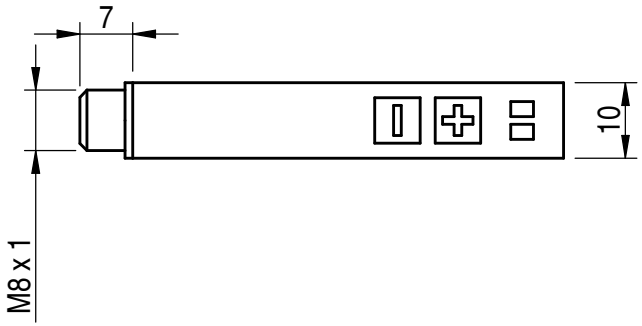
7
10
M8 x 1